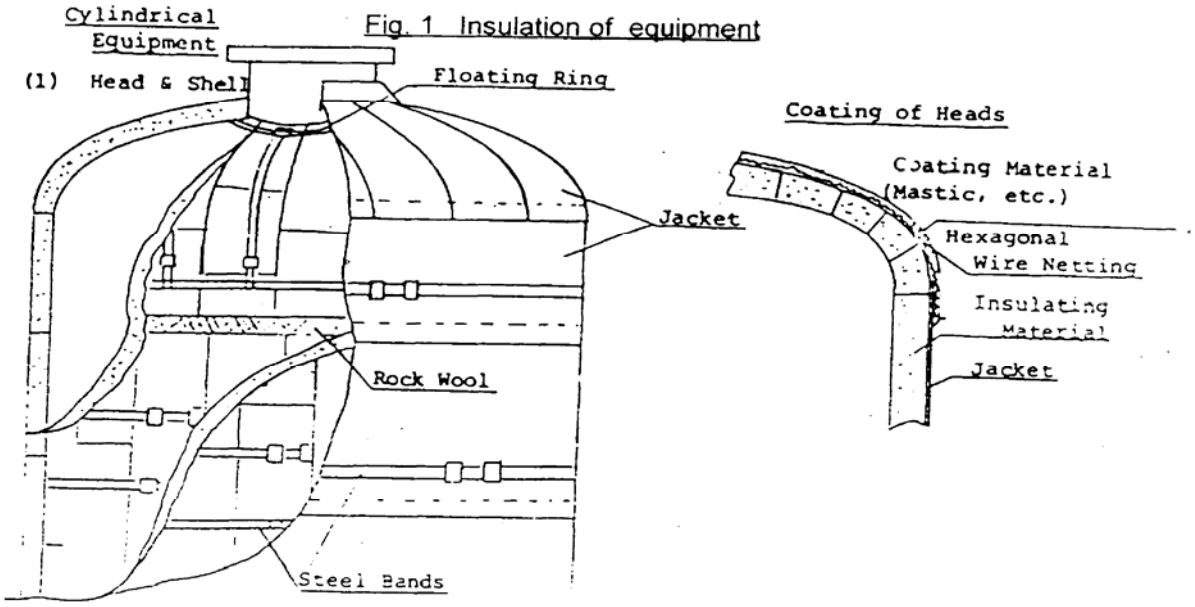
Cylindrical Equipment
Fig. 1 Insulation of equipment
(1) Head & Shell
Floating Ring
Coating of Heads
Coating Material (Mastic, etc.)
Jacket
Hexagonal Wire Netting
Insulating Material
Jacket
Rock Wool
Steel Bands

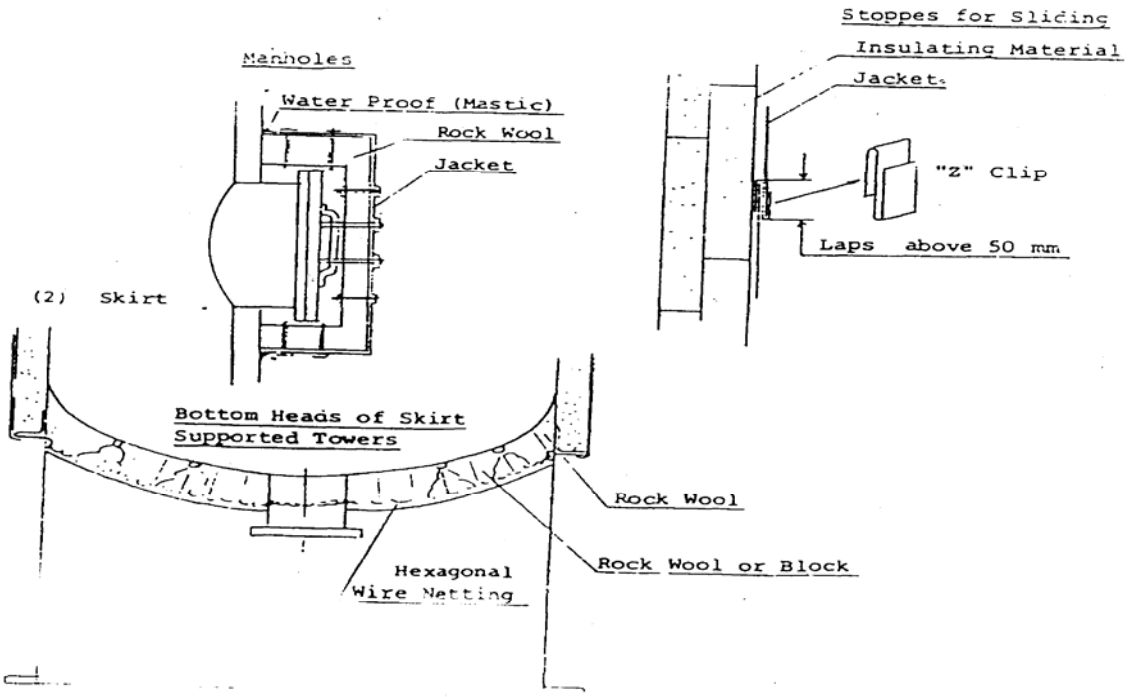
Stoppes for Sliding
Insulating Material
Jacket
Manholes
Water Proof (Mastic)
Rock Wool
Jacket
"Z" Clip
Laps above 50 mm
(2) Skirt
Bottom Heads of Skirt Supported Towers
Rock Wool
Rock Wool or Block
Hexagonal Wire Netting

Fig. 2 Heat Insulation of Piping

(1) Straight Pipes

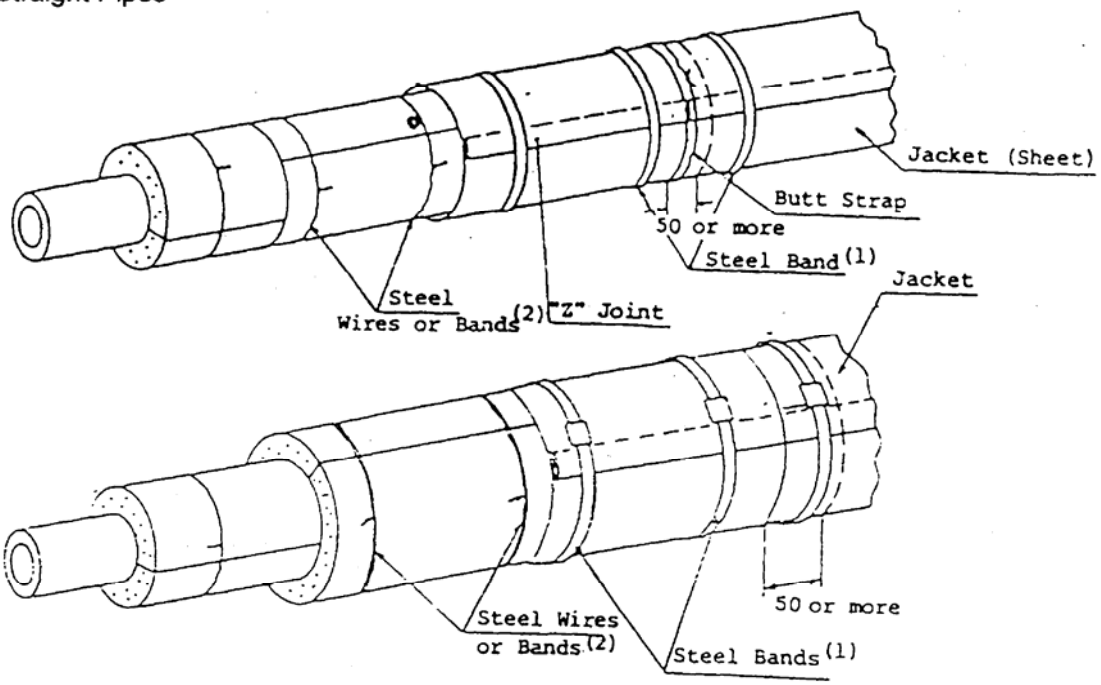

(1) Fastening band shall be applied as specified below :

(a) For Precoated Jacket with "z" joint : 30B or larger in nominal diameter of pipe.

(b) For Aluminium Jacket with "z" joint : 20 B or larger in nominal diameter of pipe.

(c) For without "z" joint : All sizes of pipes.

(2)

(a) 18B or below in nominal diameter of pipe : Iron wire shall be used.

(b) 20B or larger in nominal diameter of pipe : Fastening band shall be used.

Fig.2 Heat insulation of Piping (Cont'd)

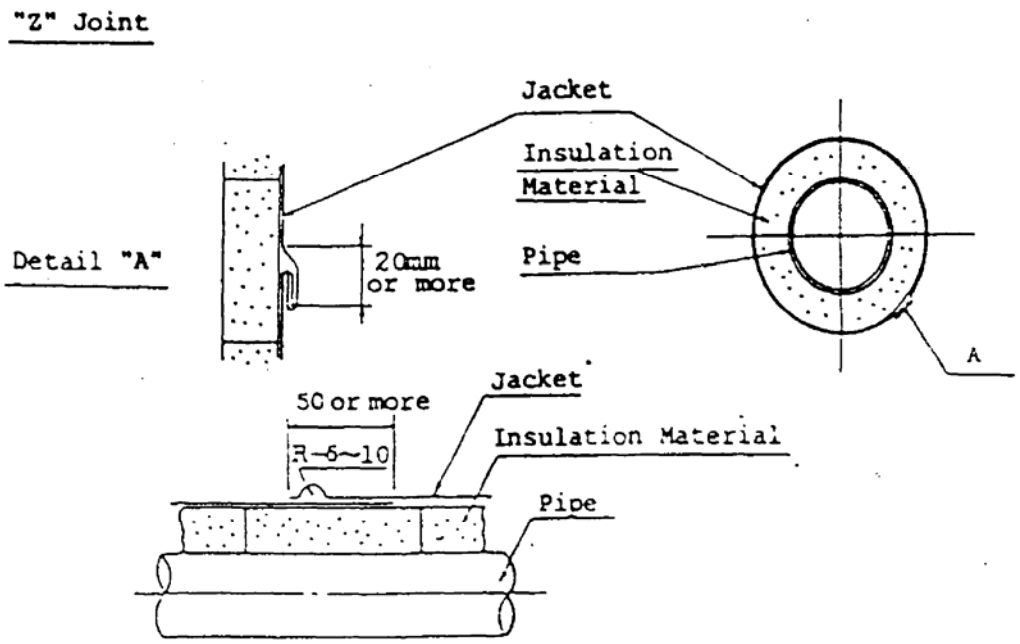

Fig.3 Heat Insulation of Trace Piping

(1) Single Trace

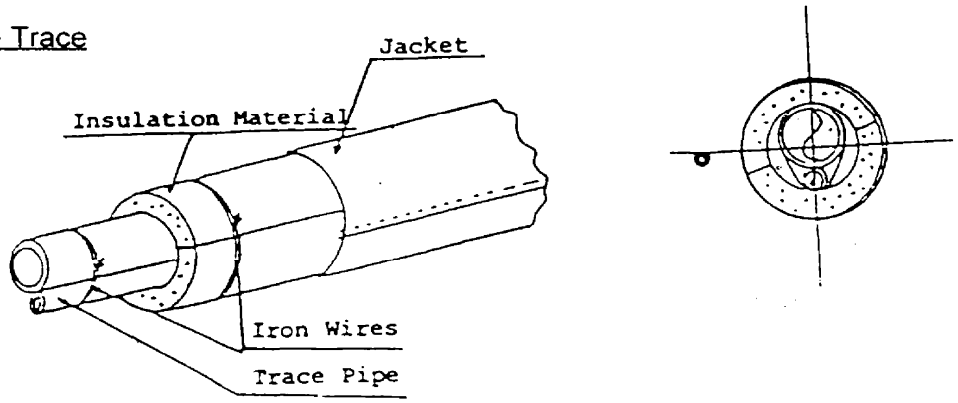

(2) Double Trace

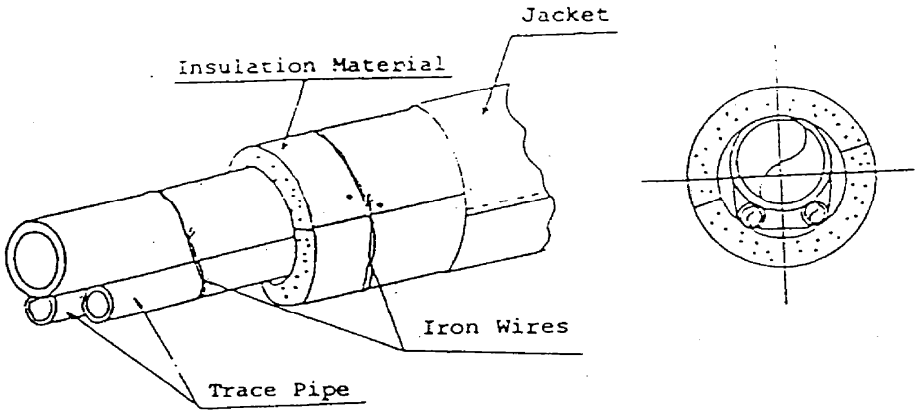

(3) Single Trace (SUS Pipe)

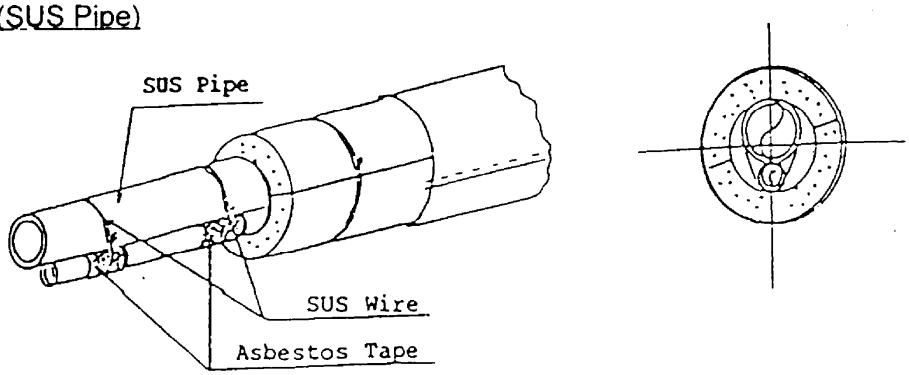

Fig.4 Heat Insulation for Bent Pipe

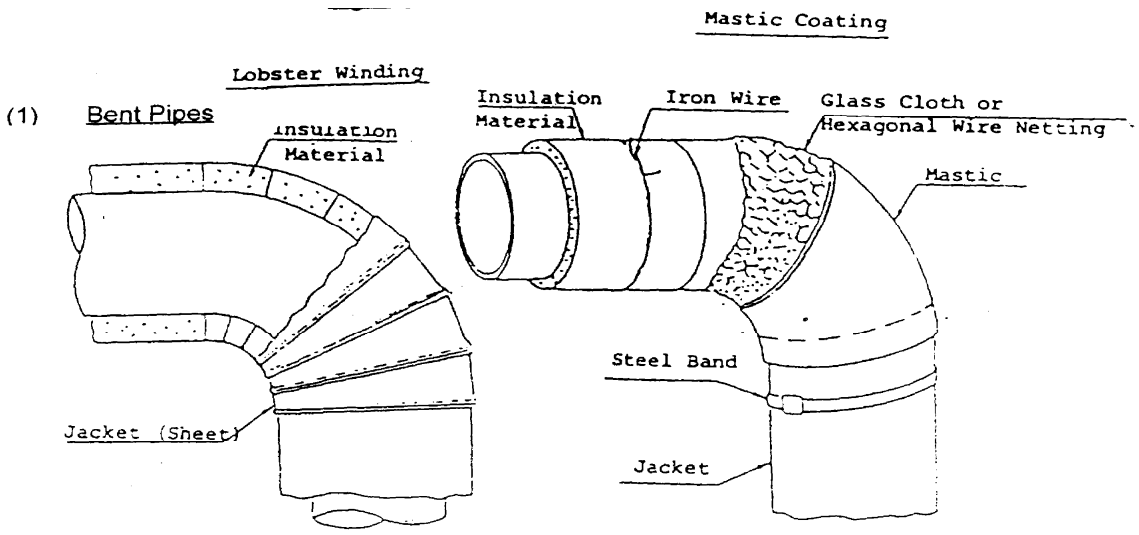

2 B or more

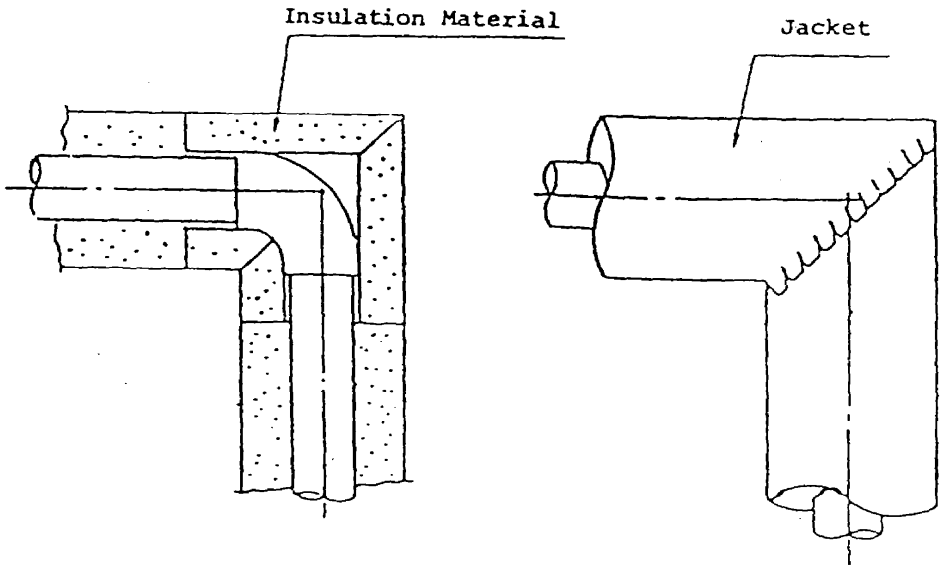

1 ½ B or below

Fig.5 Heat Insulation of Flanges & Valves

(1) Flanges

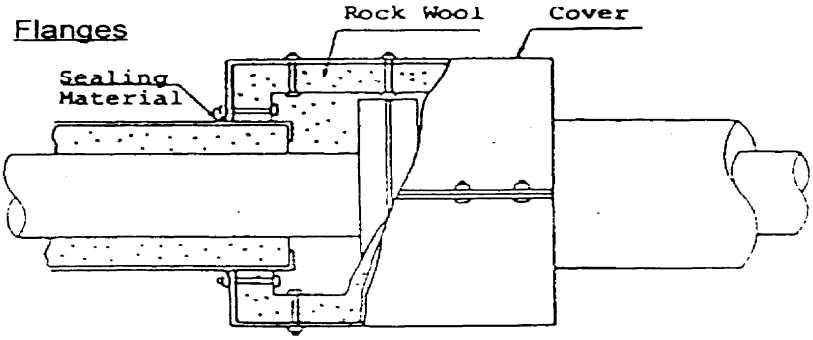

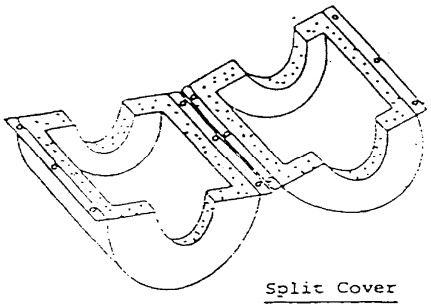

(2) Valves (Split Cover)

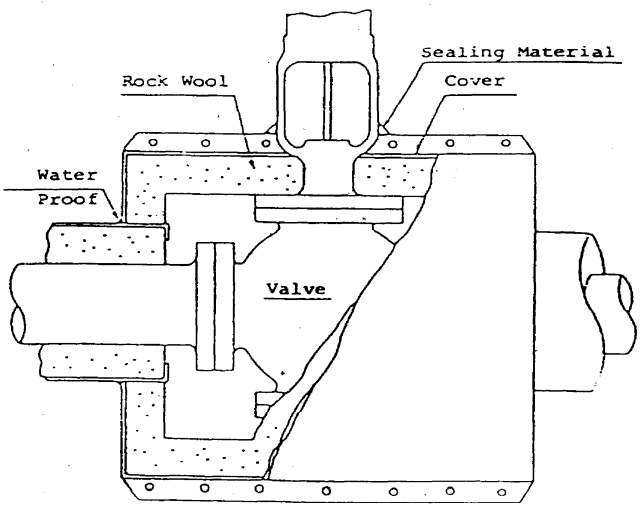
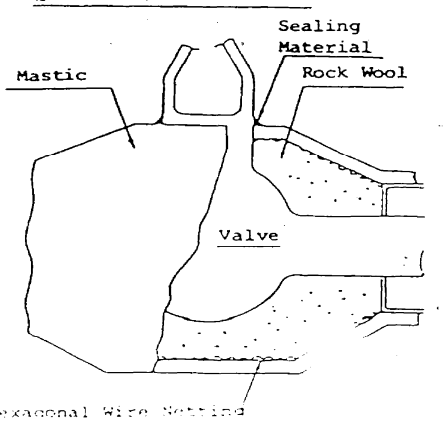
(3) Valve (Mastic Coating)