**Tender No. : 16000017-HD-11994** **Tender Published On : 08-Mar-2017 16:18**

Hindustan Petroleum Corporation Limited

Corporate Identification Number L23201MH1952GOI008858

| Basic Information Of Tender | |
|---|---|
| Title | Supply of MainlinePumps-VREEP |
| Description | Supply of Mainline Centrifugal Pumps for VVSPL Capacity Augmentation Project, HPCL |
| Tender Type | Public |
| Tender Scope | Global |
| Bid Type | Two Bid |
| Evaluation Criteria | Schedule Wise |
| Tender Due Date & Time | 07-Apr-2017 15:00 |
| Reverse Auction Applicable | Yes |
| Pre Bid Conference Start Date & Time | 20-Mar-2017 11:00 |
| Pre Bid Conference End Date & Time | 20-Mar-2017 11:45 |
| Queries Start Date & Time | 08-Mar-2017 17:00 |
| Quries End Date & Time | 18-Mar-2017 15:00 |
| Un Priced Bid Open Date & Time | 07-Apr-2017 15:30 |
| Purchase Deptt. | PUR DEPT-MANGALORE BANGALORE LPG PL PROJ |
| Fax No. | 22535400 |
| Office Address | Hindustan Petroleum Corporation Limited ,No. 332,Darus Salam Building(2nd Floor) ,Queens Road , ,Bangalore ,560052 , ,KA , , |
| TF/EMD Drop Box Address | DP Srivastava, Manager Purchase,HPCL,2nd Floor no 332,Darus salam Building queens road, Bangalore-560052 |
| Tender Description | HPCL is currently pursuing to expand Vizag refinery from the current name plate capacity of 8.3 MMPTA to 15 MMTPA with a yield of 11.85 MMTPA for MS, HSD and SKO. In-line with refinery expansion plan, HPCL is also planning to take up capacity augmentation of existing VVSPL (Vizag Vijayawada Secunderabad Pipeline) from 5.38 MMTPA to 7.9 MMTPA simultaneously.Capacity augmentation is proposed by implementation of new pump stations at existing IPS-1 (Ch. 92.9 km), IPS-2 (Ch. 264.5 km), SV-17 Station and also by upgrading the existing booster pump facilities in Vizag, Rajahmundry, Vijayawada, Suryapet and in Secunderabad. It also covers formulating and integration of new facilities with existing Electrical, Instrumentation, PLC, SCADA, APPS including LDS, OWS system, piping arrangements.The scope of work for supply of Mainline Centrifugal Pumps includes (but not limited to) the Design, Engineering, Procurement of bought out items, Supply, Manufacturing, Fabrication, Assembly, Painting, Inspection, Testing, Packing and Forwarding, Delivery and Supervision of Installation, Commissioning for Mainline Centrifugal Pumps, installation of Instrument packages, demo and training to HPCL personnel at HPCL, Annual Maintenance Contract for VVSPL Capacity Augmentation Project, (As per Scope of Supply and Works mentioned in e-tender) |
| Notice Inviting Tender | |

| Currency Type | Tender Fee | EMD |
|---|---|---|
| INR | 0.0 | 0.0 |
| EUR | 0.0 | 0.0 |
| GBP | 0.0 | 0.0 |
| JPY | 0.0 | 0.0 |
| USD | 0.0 | 0.0 |

| Schedule Desc | Currency Type | EMD Value |
|---|---|---|
| Schedule 1 | INR | 3354000 |
| Schedule 1 | USD | 50193 |
| Schedule 2 | INR | 3289000 |
| Schedule 2 | USD | 49220 |
| Schedule 3 | INR | 3289000 |
| Schedule 3 | USD | 49220 |
| Schedule 4 | INR | 2629000 |
| Schedule 4 | USD | 39336 |
| Schedule 5 | INR | 2302000 |
| Schedule 5 | USD | 34442 |

**Delivery Terms - Free to Destination location unless specified otherwise. Validity of offer - 120 days from the initial or extended Due Date for submission of Tender whichever is later unless specified otherwise. Liquidated Damages/Price Reduction clause accepted unless specified otherwise.**

**In case bidder does not deviate from the standard offer validity in on line deviation form, bidâ€™s offer validity shall be considered as mentioned above.**

**In case a Revised priced bid is initiated for this tender, at a later date (eg Technical evaluation stage etc), it shall be incumbent upon the bidder to submit revised bids for the specified items/entire tender. In the absence of revised bids rom the bidder within specified time period, the original bid submitted by the bidder shall not be considered for evaluation.**

**HPCL reserves the right to reveal the contents of the bid documents submitted by the vendor during the witness bid opening process as per prevailing policy of the corporation.**

**Please quote all the taxes, if applicable, only in percentage terms and not in Per unit(Amount) basis. The Per unit option is provided only to quote for extras like Loading charges, packing charges, TPI charges etc. In case, it is found that you have quoted taxes in amount basis, your bid may be liable for rejection.**

Digitally signed by
Mangesh Tukaram
Thasal
Date: 2017.03.08
16:26:59 IST

# HINDUSTAN PETROLEUM CORPORATION LIMITED

**(A Government of India Enterprise)**

Procurement – Project & Pipelines

Pipeline Projects South (Bangalore Office)

**Registered Office : 17 , Jamshedji Tata Road, MUMBAI;CIN:L23201MH1952GO1008858**

## GLOBAL NOTICE INVITING E-TENDER

M/s WorleyParsons on behalf of HPCL invites digitally signed & sealed (encrypted) E-tenders under two bid system (online bids only to be submitted at site **https://etender.hpcl.co.in)** from eligible Bidders with following details :

| Tender No | Tender Description | Pre-Bid meeting Details | Due date for online bid submission |
|---|---|---|---|
| **16000017-HD-11994** | **Supply Of Mainline Centrifugal Pumps for VVSPL Capacity Augmentation Project** | **20.03.2017 from 11:00 hrs at Vishakapatanam** | **07.04.2017 upto15:00 hrs IST** |

The complete tender document including EMD, Bid Qualification Criteria (BQC) etc. can also be viewed at our web site **www.hindustanpetroleum.com** under tender section: link "Tenders & Contracts". All further revisions ,clarifications ,corrigenda, addenda, time extensions etc, to above tender will be hosted on above HPCL websites only. Bidders should regularly visit this website to keep themselves updated.

**Manager - Purchase**

HINDUSTAN PETROLEUM CORPORATION LIMITED

## Reverse Auction – Terms & Conditions and Procedure

HPCL proposes to conduct Reverse auction for the items or schedules or on overall basis as specified in the tender. Please go through the Terms & Conditions and Procedure given below and submit your acceptance to the same by signing and uploading this document along with unpriced bid.

**Terms & Conditions**

1. HPCL reserves the right to carryout 'Online Reverse Auction' with techno-commercially accepted bidders for determining the lowest bidder for the requirements mentioned in this tender enquiry. *Reverse auction shall be conducted only when there are* ***at least two or more "Techno-commercially" accepted*** *vendors at Technical evaluation stage*.

2. Online reverse auction shall be conducted by HPCL on a specified date and time. The vendors shall be participating in the reverse auction from their own offices / place of their choice. Internet connectivity shall have to be ensured by the bidders themselves. *HPCL shall not be held responsible for local issues, such as loss of connectivity, Internet discontinuity, and discrepancy in browser which may result in non-display of latest bid in client PC*.

3. In extreme case of Server outage, network outage or failure of Internet connectivity, (or any other unforeseen conditions) from HPCL's end, fax/ E-Mail communication shall have to be made immediately, to concerned purchase officer of HPCL. *No such request shall be entertained beyond* ***one hour*** *of the RA closing time*. To provide equal opportunity, HPCL may decide to **extend the Reverse auction** at their discretion, but not as the right of the bidder. The vendors participating in Reverse Auction process shall be kept on standby for 1 Hour after RA closing time.

4. HPCL shall investigate the above matter and decision for extension of Reverse Auction shall be based on the merit of the issues pointed out and verified by HPCL and same shall be final and binding on the vendor.

5. HPCL shall complete the investigation within two working days of receiving complaint from any of the vendor.

6. In case of decision to extend Reverse Auction, intimation mail may go out to all vendors within a day of investigation closure. Vendors shall generally be given intimation, a day in advance before extended Reverse Auction is commenced. The Reverse Auction shall

commence from the last **saved decrement value** and shall be open for period of **original duration** from commencement.

7. Bidders have to confirm their willingness to participate in 'Online Reverse Auction' during their bid submission by ensuring compliance to the Terms & Conditions and Procedure specified herewith. Please note that non acceptance to participate in the Reverse Auction process will lead to rejection of the bid without any further evaluation.

8. HPCL will pre-decide the commercial loading, if any, on the basis of the taxes & duties quoted by the bidder, and loading on account of commercial deviations, if any. The loading factors shall be displayed in the portal prior to the date scheduled for Reverse Auction Event.

9. Bidders are requested to understand the impact of loading factors applied on their bids at the earliest, on getting intimation regarding same. In case of any objection to the applied loading factor same shall be brought to the notice of Purchase officer immediately. No further communication on this ground will be entertained after publishing of Reverse auction.

10. As part of Reverse Auction process, the Start Bid price(Benchmark) shall be specified by HPCL on Reverse Auction Portal, which shall be the lowest of the **price bids,** as submitted by the bidders on the e-procurement portal i.e. 'Bids opened for RA event' and HPCL's in-house **estimate**. **Please note that such priced bid opening shall be system driven and therefore bidder's identity vis-à-vis quoted price shall be confidential.**

11. In case of overall evaluation tenders or schedule wise evaluation tender, the Reverse auction shall be conducted on the bottom line, net delivered cost.

12. In case of tenders, which are evaluated on Schedule wise or Overall L1 basis, the individual item rates will **get reduced on pro-rated basis** as the decrements are effected during reverse auction event.

13. During the Reverse auction event, the **taxes** which are quoted in percentage basis will get **reduced proportionately** as the RA progresses. However, **Extras** like Loading charges/packing charges/TPI which are quoted in per unit basis (amount terms) **remains constant** as the decrements are effected.

14. Vendors shall ensure to quote the **statutory taxes only in percentage basis** and not in amount terms. In case of non-compliance to this clause, bids shall be liable for rejection.

15. System shall allow to conduct Reverse Auction on **multi-currency tender**/bidding. The exchange rate for converting the INR value to originally quoted currency (USD, EUR, GBP, JPY only) shall be the one which was prevailing on the **date of unpriced bid opening** in line with tender condition. In such cases the basic reverse Auction shall be carried out in INR currency only. However bidders having submitted bids in any of the four currencies – USD, EUR, GBP, JPY shall be able to view the basic rates ( *in **original currency** basis conversion on the date of unpriced bid opening* ) corresponding to contemplated decrement in the "**show**" screen. (*Vendors may first check impact of decrement on item rates in original currency before submission of decrement during RA*).

16. Reverse auction shall be held for a period of 60 minutes and shall be automatically extended by a further period of 5 minutes in case of receipt of any bid during the last 5 minutes of the auction period. This process shall continue until no bids are received in the last 5 minutes of the auction. Hence it may be noted that the reverse auction may continue beyond a period of 60 minutes. Thereafter reverse auction shall get automatically closed. This shall be an automated process.

17. Order may be placed on the lowest bidder, emerging out of the reverse auction process and HPCL's decision on award of contract shall be final and binding on all the bidders.

18. HPCL reserves the right to further rationalize the prices with lowest bidder for reducing the price at any time before ordering.

19. HPCL reserves the right to cancel the reverse auction after event is scheduled but before actual event taking place or after the reverse auction has completed in case of failure or any other reason. The reasons for cancellation shall be conveyed to all vendors.

20. In cases where tender is required to be cancelled after opening of priced bid and identification of L1 vendor and wherein Reverse Auction was also part of tender, reasons for cancellation shall be conveyed to the L1 vendor.

21. During Reverse Auction Process, if no bids are received within the scheduled/rescheduled date & specified time of the reverse auction, HPCL at its discretion can scrap the reverse auction and proceed with the opening of the Electronic priced bids submitted by the bidders. In such case HPCL shall display the bidder's identity and original rates.

22. The bid on the Reverse Auction Portal will be taken as an offer to sell. Bids once made, cannot be cancelled / withdrawn and the bidder shall be bound to sell the material/services at the final bid price, and as per the specifications mentioned in the tender. Should the bidder back out and not make the supplies as per the rates quoted or in case the material

supplied/services is not as per specifications mentioned in the tender, HPCL shall take appropriate action as per the terms & conditions mentioned in the tender.

23. At the end of the Reverse Auction, HPCL will decide the successful bidder, basis the evaluation criteria specified in the tender. HPCL's decision on award of Contract shall be final and binding on all the Bidders.

24. HPCL shall not have any liability to bidders for any interruption or delay in access to the reverse auction portal irrespective of the cause.

25. The **participation of vendors in the tendering process** shall be construed as acceptance to the terms & conditions and procedure for the **reverse auction**. This compliance also shall be deemed as participation in Reverse auction.

26. In case a bidder agrees for reverse auction in the un-priced bid but withdraws acceptance any time after tender due date & time, the EMD of such bidder may be forfeited along with rejection of offer at the sole discretion of HPCL.

27. Once Auction is started, no communication from vendor shall be entertained unless it is of the nature of any serious issue in the Reverse Auction portal.

28. The yellow color back ground on RA page of the portal indicates that the due date and time of respective Reverse Auction is over. RA shall be concluded <u>after standby period is over</u> and auto generated mail is received by vendor.

29. The Bidder shall not involve himself or any of his representatives in Price manipulation of any kind directly or indirectly by communicating with other suppliers / bidders.

30. The Bidder shall not divulge either his Bids or any other exclusive details of HPCL to any other party.

31. HPCL's decision on award of Contract shall be final and binding on all the Bidders.

32. HPCL can decide to extend, reschedule or cancel any Auction. If any changes are made by HPCL after the first posting and the Bidder continues to access the site after the changes, it shall be presumed that the bidder has accepted the changes.

33. HPCL will not be held responsible for consequential damages, including but not limited to systems problems, inability to use the system, loss of electronic information etc.

**Reverse Auction Procedure**

1. In case HPCL decides to conduct Reverse Auction, the qualified bidders would be communicated on the same thru E-mails about the date and time of the Reverse Auction event. The Reverse auction event shall be conducted in the HPCL e-tender portal under link "Reverse auction".

2. Reverse Auction shall be available to Bidder only after two factor authentication. Initially vendor will login to the site etender.hpcl.co.in with his Login Id and password. Thereafter they shall click on the "Reverse auction" link in the portal to view/participate in ongoing/upcoming reverse auctions.

3. Brief procedure to participate in RA:

   I. Bidders may click on "Reverse Auction", followed by click on 'password' and Download the encrypted password.
   II. Save the downloaded password and open Signing Utility, Select action as "Decrypt Reverse Auction Password".
   III. Browse the downloaded file. Select appropriate certificate and click on Decrypt Password. Copy the password and paste in "Password" field and click on Reverse Auction.

4. HPCL will display Start Bid price i.e., **Bench Mark** price (which shall be the lowest of the price bids submitted by the bidders on the e-procurement portal i.e. 'Bids opened for RA event' and HPCL's in-house estimate), which shall be visible to all the vendors at the start of the Reverse Auction.

5. Identity of bidders never gets disclosed to anyone, during reverse auction process

6. HPCL shall specify the minimum amount/percentage by which the bidders can reduce their bids at a time on the Reverse Auction Portal. This amount is referred as the 'bid decrement factor' and shall be specified by HPCL.

7. Bidders shall start bidding from this Bench Mark Price. The bidder can bid lower than the prevailing Lowest Bid at any time during the event by one decrement or multiples of the Bid decrement.

8. In case the "SUBMIT QUOTE" button is not enabled after a few seconds of clicking, vendors are urged to **Re-Login** to the page for viewing the latest **leading bid** and submit fresh quotes. *The process takes less than a few seconds.*

9. The bidder shall be able to view the following values on his screen along with the other necessary fields in the Reverse Auction:

- Item-wise Leading Bid in the Auction (Delivered Cost)
- Bid Placed by bidder (Delivered Cost)
- Bid value contemplated by bidder before submission(Delivered Cost)

33.9.1. Bidder can reduce his bid repeatedly during the auction period

10. Bidders shall be provided information on item wise pro-rated reduction in the rates, for guidance.

11. The **confirmed bid** submitted by vendor during the RA process shall always reflect in the "**Previous Bid**" field only (red font). The field "**Current bid**" shall display the contemplated bid value and "**Leading Bid**" shall show the current lowest bid value as submitted by any of the vendors.

12. The Closing Price(s) offered by the bidders at the conclusion of the Reverse Auction shall be valid for a minimum period of 30 days or as mentioned in tender, from the date of conclusion of the Reverse Auction.

13. After the Reverse auction is over successfully and closed by purchase officer, vendor can witness the lowest rate submitted by other vendors in "Witness bid opening" link.

14. In case of Item-wise evaluation tenders, any or all items may undergo Reverse Auction separately at the discretion of HPCL.

15. In case of Schedule-wise evaluation tenders, any or all schedules may undergo Reverse Auction separately at the discretion of HPCL.

16. In case of **SOR type tenders**, where vendor has quoted a single percentage plus or minus against the offered rate, the decrement shall be applicable on the **bench mark value on base of 100** (i.e. it could be 107 in case of plus 7% or 94 in case of minus 6 percent). This value shall be delivered cost i.e. inclusive of taxes and loading factor.

17. HPCL reserves right to conduct single reverse auction for multiple items with separate decrement option.

18. Vendor shall have option to participate in multiple reverse auction if it is scheduled at the same time.

19. Successful vendor shall be required to submit the final prices digitally signed and uploaded as token of acceptance without any new condition other than those already agreed to before start of auction.

20. Vendors may seek telephonic guidance before or during the Reverse auction process from Helpdesk support at **022-4114666**, between **8.00 AM to 8.00 PM** on any working day, except Sundays and Public holiday.

**Tender No. : 16000017-HD-11994**

Tender Published On : 08-Mar-2017 16:18

## Line Details Of Tender

| Srl. No. | Line Description | Ship To Location | UOM | Quantity | Mandatory |
|---|---|---|---|---|---|
| | Schedule 1 | | | Manadatory: No | |
| 1 | Supply MPs-VDS(10-PA-CF-104) | 11994-VR EXPANSION EVACUATION PROJ | Set | 1 | Yes |
| DESCRIPTION => Supply of Mainline pumps for VDS Design, Engineering, Procurement of bought out items, Supply, Manufacturing, Fabrication, Assembly, Painting, Inspection, Testing, Packing and Forwarding and Delivery of Mainline Centrifugal pumps including mandatory spares for VVSPL Capacity Augmentation project (As per scope of supply and works mentioned in the tender document for tag no.s 10-PA-CF-104) | | | | | |
| 2 | SupervisionForInstall/Com-VDS | 11994-VR EXPANSION EVACUATION PROJ | Man Day | 15 | Yes |
| DESCRIPTION => Supervision for Installation/commissioning of items specified at Sr.no.1 ,Tag No.10-PA-CF-104 , as per enclosed instructions to vendor in MR | | | | | |
| 3 | Training- MPsVDS | 11994-VR EXPANSION EVACUATION PROJ | Man Day | 5 | Yes |
| DESCRIPTION => Training of items specified at Sr.no.1, Tag No.10-PA-CF-104 , as per enclosed instructions to vendor in MR | | | | | |
| 4 | Supply MPs-RBS(20-PA-CF-103) | 11994-VR EXPANSION EVACUATION PROJ | Set | 1 | Yes |
| DESCRIPTION => Supply of Mainline pumps for RBS Design, Engineering, Procurement of bought out items, Supply, Manufacturing, Fabrication, Assembly, Painting, Inspection, Testing, Packing and Forwarding and Delivery of Mainline Centrifugal pumps including mandatory spares for VVSPL Capacity Augmentation project (As per scope of supply and works mentioned in the tender document for tag no.s 20-PA-CF-103) | | | | | |
| 5 | SupervisionForInstall/Com-RBS | 11994-VR EXPANSION EVACUATION PROJ | Man Day | 15 | Yes |
| DESCRIPTION => Supervision for Installation / commissioning of items specified at Sr.no.4 ,Tag No.20-PA-CF-103, as per enclosed instructions to vendor in MR | | | | | |
| 6 | Training- MPsRBS | 11994-VR EXPANSION EVACUATION PROJ | Man Day | 5 | Yes |
| DESCRIPTION => Training of items specified at Sr.no.4 ,Tag No.20-PA-CF-103, as per enclosed instructions to vendor in MR | | | | | |
| 7 | SupplyMPs-VBS(30-PA-CF-101 D) | 11994-VR EXPANSION EVACUATION PROJ | Set | 1 | Yes |
| DESCRIPTION => Supply of Mainline pumps for VBS Design, Engineering, Procurement of bought out items, Supply, Manufacturing, Fabrication, Assembly, Painting, Inspection, Testing, Packing and Forwarding and Delivery of Mainline Centrifugal pumps including mandatory spares for VVSPL Capacity Augmentation project (As per scope of supply and works mentioned in the tender document for tag no.s 30-PA-CF-101 D) | | | | | |
| 8 | SupervisionForInstall/Com-VBS | 11994-VR EXPANSION EVACUATION PROJ | Man Day | 15 | Yes |
| DESCRIPTION => Supervision for Installation / commissioning of items specified at Sr.no.7 ,Tag No. 30-PA-CF-101 D , as per enclosed instructions to vendor in MR | | | | | |
| 9 | Training- MPsVBS | 11994-VR EXPANSION EVACUATION PROJ | Man Day | 5 | Yes |
| DESCRIPTION => Training of items specified at Sr.no. 7 ,Tag No. 30-PA-CF-101 D , as per enclosed instructions to vendor in MR | | | | | |
| 10 | SupVFD MP-VBS(30-PA-CF-101A) | 11994-VR EXPANSION EVACUATION PROJ | Each | 1 | Yes |
| DESCRIPTION => Supply of VFD for existing Mainline pump at VBS Design, Engineering, Procurement of bought out items, Supply, Manufacturing, Fabrication, Assembly, Painting, Inspection, Testing, Packing and Forwarding and Delivery of VFD including mandatory spares for VVSPL Capacity Augmentation project (As per scope of supply and works mentioned in the tender document for existing Main line pump tag no. 30-PA-CF-101 A (900kW)) | | | | | |
| 11 | SupervisionForInstall/Com-VFD | 11994-VR EXPANSION EVACUATION PROJ | Man Day | 5 | Yes |
| DESCRIPTION => Supervision for Installation / commissioning of items specified at Sr.no. 10, VFD for Tag No : 30-PA-CF-101 A (900kW) , as per enclosed instructions to vendor in MR | | | | | |
| 12 | Training- VFD MPs-VBS | 11994-VR EXPANSION EVACUATION PROJ | Man Day | 2 | Yes |
| DESCRIPTION => Training of items specified at Sr.no.10, VFD for Tag No : 30-PA-CF-101 A (900kW) , as per enclosed instructions to vendor in MR | | | | | |
| 13 | AnnualMaintenance-1stYr | 11994-VR EXPANSION EVACUATION PROJ | Lump Sum | 1 | Yes |
| DESCRIPTION => Annual Maintenance Charges for First year of operation after warrenty period (1st year) of items specified at Sr.no.1 Tag No : 10-PA-CF-104 , Sr.no.4 Tag No : 20-PA-CF-103 , Sr.no.7 Tag No : 30-PA-CF-101 D , Sr.no.10 VFD for Tag No : 30-PA-CF- 101 A (900kW) as per enclosed instructions to vendor in MR | | | | | |
| 14 | AnnualMaintenance-2ndYr | 11994-VR EXPANSION EVACUATION PROJ | Lump Sum | 1 | Yes |
| DESCRIPTION => Annual Maintenance Charges for Second year of operation after warrenty period (2nd year) of items specified at Sr.no.1 Tag No : 10-PA-CF-104 , Sr.no.4 Tag No : 20-PA-CF-103 , Sr.no.7 Tag No : 30-PA-CF-101 D , Sr.no.10 VFD for Tag No : 30-PA-CF- 101 A (900kW) as per enclosed instructions to vendor in MR | | | | | |
| 15 | AnnualMaintenance-3rdYr | 11994-VR EXPANSION EVACUATION PROJ | Lump Sum | 1 | Yes |
| DESCRIPTION => Annual Maintenance Charges for Third year of operation after warrenty period (3rd year) specified of items specified at Sr.no.1 Tag No : 10-PA-CF-104 , Sr.no.4 Tag No : 20-PA-CF-103 , Sr.no.7 Tag No : 30-PA-CF-101 D , Sr.no.10 VFD for Tag No : 30-PA-CF- 101 A (900kW) as per enclosed instructions to vendor in MR | | | | | |
| 16 | Sparesfor2YrOperatn/Maint-VDS. | 11994-VR EXPANSION EVACUATION PROJ | Set | 1 | Yes |
| DESCRIPTION => Recommended spares for two years operation and maintenance, Tag No : 10-PA-CF-104 | | | | | |
| 17 | Sparesfor2YrOperatn/Maint-RBS. | 11994-VR EXPANSION EVACUATION PROJ | Set | 1 | Yes |
| DESCRIPTION => Recommended spares for two years operation and maintenance, Tag No : 20-PA-CF-103 | | | | | |
| 18 | Sparesfor2YrOperatn/Maint-VBS. | 11994-VR EXPANSION EVACUATION PROJ | Set | 1 | Yes |
| DESCRIPTION => Recommended spares for two years operation and maintenance, Tag No. 30-PA-CF-101 D | | | | | |
| 19 | Sparesfor2YrOperatn/Maint-VFD. | 11994-VR EXPANSION EVACUATION PROJ | Set | 1 | Yes |
| DESCRIPTION => Recommended spares for two years operation and maintenance, Tag No : 30-PA-CF-101 A (900kW) | | | | | |
| | Schedule 2 | | | Manadatory: No | |
| 1 | SupMPs-IPS1(15-PA-CF-101A/B/C) | 11994-VR EXPANSION EVACUATION PROJ | Set | 3 | Yes |
| DESCRIPTION => Supply of Mainline pumps for IPS 1 Design, Engineering, Procurement of bought out items, Supply, Manufacturing, Fabrication, Assembly, Painting, Inspection, Testing, Packing and Forwarding and Delivery of Mainline Centrifugal pumps including mandatory spares for VVSPL Capacity Augmentation project (As per scope of supply and works mentioned in the tender document for tag no.s 15-PA-CF-101 A/B/C) | | | | | |

| | | | | | |
|---|---|---|---|---|---|
| 2 | SupervisionForInstall/Com-IPS1 | 11994-VR EXPANSION EVACUATION PROJ | Man Day | 15 | Yes |
| DESCRIPTION => Supervision for Installation/commissioning of items specified at Sr.no. 20, Tag No.15-PA-CF-101 A/B/C , as per enclosed instructions to vendor in MR | | | | | |
| 3 | Training- MPsIPS1 | 11994-VR EXPANSION EVACUATION PROJ | Man Day | 5 | Yes |
| DESCRIPTION => Training of items specified at Sr.no.20, Tag No.15-PA-CF-101 A/B/C , as per enclosed instructions to vendor in MR | | | | | |
| 4 | AnnualMaintenance-1stYr | 11994-VR EXPANSION EVACUATION PROJ | Lump Sum | 1 | Yes |
| DESCRIPTION => Annual Maintenance Charges for First year of operation after warrenty period (1st year) of Items Specified at Sr.no 20 , Tag No. 15-PA-CF-101 A/B/C as per enclosed instructions to vendor in MR | | | | | |
| 5 | AnnualMaintenance-2ndYr | 11994-VR EXPANSION EVACUATION PROJ | Lump Sum | 1 | Yes |
| DESCRIPTION => Annual Maintenance Charges for Second year of operation after warrenty period (2nd year) of Items Specified at Sr.no 20 , Tag No. 15-PA-CF-101 A/B/C as per enclosed instructions to vendor in MR | | | | | |
| 6 | AnnualMaintenance-3rdYr | 11994-VR EXPANSION EVACUATION PROJ | Lump Sum | 1 | Yes |
| DESCRIPTION => Annual Maintenance Charges for Third year of operation after warrenty period (3rd year) of Items Specified at Sr.no 20 , Tag No. 15-PA-CF-101 A/B/C as per enclosed instructions to vendor in MR | | | | | |
| 7 | Sparesfor2YrOperatn/MaintIPS1 | 11994-VR EXPANSION EVACUATION PROJ | Set | 1 | Yes |
| DESCRIPTION => Recommended spares for two years operation and maintenance, Tag No :Tag No.15-PA-CF-101 A/B/C | | | | | |
| Schedule 3 | | | | Manadatory: No | |
| 1 | SupMPs-IPS2(25-PA-CF-101A/B/C) | 11994-VR EXPANSION EVACUATION PROJ | Set | 3 | Yes |
| DESCRIPTION => Supply of Mainline pumps for IPS 2 Design, Engineering, Procurement of bought out items, Supply, Manufacturing, Fabrication, Assembly, Painting, Inspection, Testing, Packing and Forwarding and Delivery of Mainline Centrifugal pumps including mandatory spares for VVSPL Capacity Augmentation project (As per scope of supply and works mentioned in the tender document for tag no.s 25-PA-CF-101 A/B/C) | | | | | |
| 2 | SupervisionForInstall/Com-IPS2 | 11994-VR EXPANSION EVACUATION PROJ | Man Day | 15 | Yes |
| DESCRIPTION => Supervision for Installation/commissioning of items specified at Sr.no.27, Tag No. 25-PA-CF-101 A/B/C , as per enclosed instructions to vendor in MR | | | | | |
| 3 | Training- MPsIPS2 | 11994-VR EXPANSION EVACUATION PROJ | Man Day | 5 | Yes |
| DESCRIPTION => Training of items specified at Sr.no.27, Tag No. 25-PA-CF-101 A/B/C, as per enclosed instructions to vendor in MR | | | | | |
| 4 | AnnualMaintenance-1stYr | 11994-VR EXPANSION EVACUATION PROJ | Lump Sum | 1 | Yes |
| DESCRIPTION => Annual Maintenance Charges for First year of operation after warrenty period (1st year) of Items Specified at Sr.no 27, Tag No. 25-PA-CF-101 A/B/C as per enclosed instructions to vendor in MR | | | | | |
| 5 | AnnualMaintenance-2ndYr | 11994-VR EXPANSION EVACUATION PROJ | Lump Sum | 1 | Yes |
| DESCRIPTION => Annual Maintenance Charges for Second year of operation after warrenty period (2nd year) of Items Specified at Sr.no 27, Tag No. 25-PA-CF-101 A/B/C as per enclosed instructions to vendor in MR | | | | | |
| 6 | AnnualMaintenance-3rdYr | 11994-VR EXPANSION EVACUATION PROJ | Lump Sum | 1 | Yes |
| DESCRIPTION => Annual Maintenance Charges for Third year of operation after warrenty period (3rd year) of Items Specified at Sr.no 27, Tag No. 25-PA-CF-101 A/B/C as per enclosed instructions to vendor in MR | | | | | |
| 7 | Sparesfor2YrOperatn/MaintIPS2 | 11994-VR EXPANSION EVACUATION PROJ | Set | 1 | Yes |
| DESCRIPTION => Recommended spares for two years operation and maintenance, Tag No. 25-PA-CF-101 A/B/C | | | | | |
| Schedule 4 | | | | Manadatory: No | |
| 1 | SupMPs-IPS3(45-PA-CF-101A/B) | 11994-VR EXPANSION EVACUATION PROJ | Set | 2 | Yes |
| DESCRIPTION => Supply of Mainline pumps for IPS 3 Design, Engineering, Procurement of bought out items, Supply, Manufacturing, Fabrication, Assembly, Painting, Inspection, Testing, Packing and Forwarding and Delivery of Mainline Centrifugal pumps including mandatory spares for VVSPL Capacity Augmentation project (As per scope of supply and works mentioned in the tender document for tag no.s 45-PA-CF-101 A/B) | | | | | |
| 2 | SupervisionForInstall/Com-IPS3 | 11994-VR EXPANSION EVACUATION PROJ | Man Day | 15 | Yes |
| DESCRIPTION => Supervision for Installation/commissioning of items specified at Sr.no.34, Tag No : 45-PA-CF-101 A/B, as per enclosed instructions to vendor in MR | | | | | |
| 3 | Training- MPsIPS3 | 11994-VR EXPANSION EVACUATION PROJ | Man Day | 5 | Yes |
| DESCRIPTION => Training of items specified at Sr.no.34, Tag No : 45-PA-CF-101 A/B, as per enclosed instructions to vendor in MR | | | | | |
| 4 | AnnualMaintenance-1stYr | 11994-VR EXPANSION EVACUATION PROJ | Lump Sum | 1 | Yes |
| DESCRIPTION => Annual Maintenance Charges for First year of operation after warrenty period (1st year) of Items Specified at Sr.no. 34, Tag No. 45-PA-CF-101 A/B as per enclosed instructions to vendor in MR | | | | | |
| 5 | AnnualMaintenance-2ndYr | 11994-VR EXPANSION EVACUATION PROJ | Lump Sum | 1 | Yes |
| DESCRIPTION => Annual Maintenance Charges for Second year of operation after warrenty period (2nd year) of Items Specified at Sr.no. 34, Tag No. 45-PA-CF-101 A/B as per enclosed instructions to vendor in MR | | | | | |
| 6 | AnnualMaintenance-3rdYr | 11994-VR EXPANSION EVACUATION PROJ | Lump Sum | 1 | Yes |
| DESCRIPTION => Annual Maintenance Charges for Third year of operation after warrenty period (3rd year) of Items Specified at Sr.no. 34, Tag No. 45-PA-CF-101 A/B as per enclosed instructions to vendor in MR | | | | | |
| 7 | Sparesfor2YrOperatn/MaintIPS3 | 11994-VR EXPANSION EVACUATION PROJ | Set | 1 | Yes |
| DESCRIPTION => Recommended spares for two years operation and maintenance, Tag No. 45-PA-CF-101 A/B | | | | | |
| Schedule 5 | | | | Manadatory: No | |
| 1 | Sup MPs-SBS(40-PA-CF-102A/B) | 11994-VR EXPANSION EVACUATION PROJ | Set | 2 | Yes |
| DESCRIPTION => Supply of Mainline pumps for SBS Design, Engineering, Procurement of bought out items, Supply, Manufacturing, Fabrication, Assembly, Painting, Inspection, Testing, Packing and Forwarding and Delivery of Mainline Centrifugal pumps including mandatory spares for VVSPL Capacity Augmentation project (As per scope of supply and works mentioned in the tender document for tag no.s 40-PA-CF-102 A/B) | | | | | |
| 2 | SupervisionForInstall/Com-SBS | 11994-VR EXPANSION EVACUATION PROJ | Man Day | 15 | Yes |

| | | | | | |
|---|---|---|---|---|---|
| DESCRIPTION => Supervision for Installation/commissioning of items specified at Sr.no.41, Tag No.40-PA-CF-102 A/B , as per enclosed instructions to vendor in MR | | | | | |
| 3 | Training- MPsSBS | 11994-VR EXPANSION EVACUATION PROJ | Man Day | 5 | Yes |
| DESCRIPTION => Training of items specified at Sr.no.41, Tag No.40-PA-CF-102 A/B , as per enclosed instructions to vendor in MR | | | | | |
| 4 | AnnualMaintenance-1stYr | 11994-VR EXPANSION EVACUATION PROJ | Lump Sum | 1 | Yes |
| DESCRIPTION => Annual Maintenance Charges for First year of operation after warrenty period (1st year) of Items Specified at Sr.no. 41, Tag No. 40-PA-CF-102 A/B as per enclosed instructions to vendor in MR | | | | | |
| 5 | AnnualMaintenance-2ndYr | 11994-VR EXPANSION EVACUATION PROJ | Lump Sum | 1 | Yes |
| DESCRIPTION => Annual Maintenance Charges for Second year of operation after warrenty period (2nd year) of Items Specified at Sr.no. 41, Tag No. 40-PA-CF-102 A/B as per enclosed instructions to vendor in MR | | | | | |
| 6 | AnnualMaintenance-3rdYr | 11994-VR EXPANSION EVACUATION PROJ | Lump Sum | 1 | Yes |
| DESCRIPTION => Annual Maintenance Charges for Third year of operation after warrenty period (3rd year) of Items Specified at Sr.no. 41, Tag No. 40-PA-CF-102 A/B as per enclosed instructions to vendor in MR | | | | | |
| 7 | Sparesfor2YrOperatn/MaintSBS | 11994-VR EXPANSION EVACUATION PROJ | Set | 1 | Yes |
| DESCRIPTION => Recommended spares for two years operation and maintenance, Tag No. 40-PA-CF-102 A/B | | | | | |

## ATC

| Sl.No. | Description | HPCL File | HPCL Value | Supporting Doc. Req'd |
|---|---|---|---|---|
| 1 | WE HEREBY ACKNOWLEDGE RECEIPT OF SUBJECT E - TENDER FOR OUR USE IN PREPARING THE BID.WE UNDERTAKE THAT THE CONTENTS OF THE BIDDING DOCUMENT SHALL BE KEPT CONFIDENTIAL AND FURTHER THAT THE DRAWINGS, SPECIFICATIONS AND DOCUMENTS SHALL NOT BE TRANSFERRED AND THAT THE SAID DOCUMENTS ARE TO BE USED ONLY FOR THE PURPOSE FOR WHICH THEY ARE INTENDED. | | - | Allowed |
| 2 | COMPLIANCE TO BID REQUIREMENT. WE HEREBY AGREE TO EACH AND EVERY WORD ORLINE FORMING PART OF THIS TENDER DOCUMENT AND ADDENDUM OR CORRIGENDUM TO THE BIDDING DOCUMENT. WE HAVE ALSO CHECKED e TENDER MESSAGE BOARD AND QUERY REPLIES ISSUED BY HPCL AND THE SAME HAS BEEN CONSIDERED IN OUR OFFER. HOWEVER, IF THERE ARE ANY DEVIATIONS TECHNICAL OR COMMERCIAL in ONLINE DEVIATION SHEET OR GENERAL RAISED BY US AGAINST THIS TENDER, THE SAME SHALL BE MENTIONED UNDER DEVIATION ,IF APPLICABLE . WE ALSO DECLARE THAT DEVIATIONS MENTIONED BY US ANYWHERE ELSE SHALL BE NULL AND VOID. WE FURTHER CONFORM THAT THE PERSON SUBMITTING THIS BID ON LINE IS AUTHORIZRED TO SUBMIT THE BID. say CONFIRM | | - | No |
| 3 | Please fill Party NAME hereby declare OR clarify that we have not been banned or delisted OR blacklisted or put on holiday list by any government or quasi Government agencies or Public Sector Undertakings. NOTE If a bidder has been banned or delisted OR blacklisted or put on holiday list by any Government or quasi Government agencies or PSUs, this fact must be clearly stated with details and it may not necessarily be a cause for disqualifying him.If this declaration is not given along with the unpriced bid, the tender will be rejected as non - responsive. | | - | Allowed |
| 4 | NAME OF THE COMPANY OR PARTY | | - | No |
| 5 | POSTAL ADDRESS | | - | No |
| 6 | NAME OF THE AUTHORISED CONTACT PERSON | | - | No |
| 7 | Mobile No. of the Authorized Contact person | | - | No |
| 8 | TELEPHONE NO. | | - | No |
| 9 | FAX NO. OF THE BIDDER | | - | No |
| 10 | WHETHER REGISTERED WITH NSIC . YES OR NO | | - | No |
| 11 | WHETHER COPY OF NSIC CERTIFICATE ENCLOSED .YES OR NO Please upload NSIC CERTIFICATE HERE, In case applicable | | - | Allowed |
| 12 | WHETHER REGISTERED AS MICRO SMALL ENTERPRISE (MSE). YES OR NO | | - | No |
| 13 | If registered as MSE,upload MSE certificate | | - | Allowed |
| 14 | If registered as MSE,Whether owner (having more than 50 percentage share) ,belongs to SC OR ST category(Yes OR No),If yes ,Please upload supporting documents for same. | | - | Allowed |
| 15 | E -PAYMENT BANK DETAILS. PLEASE SUBMIT AND UPLOAD DETAILS AS PER BANK MANDATE FORMAT PROVIDED WITH THIS TENDER (ANNEXURE-T TO CHAPTER-9). | | - | Allowed |
| 16 | PLEASE UPLOAD YOUR PAN CARD ,IN CASE NOT REGISTERED WITH HPCL FOR E -PAYMENT. | | - | Allowed |
| 17 | ENTITY STATUS. INDICATE YOUR COMPANY ENTITY STATUS. Corporate Entity - Public Limited OR Private Limited OR Non Body Corporate- Individuals OR Hindu Undivided Family OR Partnership Firms OR Association of Persons (AOP) and upload proof of entity status. | | - | Allowed |
| 18 | DETAILS OF BUILT -IN-CIF VALUE, IMPORT CONTENT and CUSTOM DUTY ,upload detail in format provided in Chapter-6 of Bidding Document,In case of NIL OR N.A. please mention the same. | | - | Allowed |
| 19 | Whether any of the Directors of Bidder is relative of any Director of Owner or the Bidder is a firm in which any Director of Owner or his relative is a Partner or the Bidder is Private Company in which any Director of Owner is a member or Director. (SAY YES or NO) | | - | No |
| 20 | Furnish Financial turn over figures of last three Financial Years, FY 2015-16:FY2014-15: FY 2013-14: | | - | Allowed |
| 21 | In support of above, bidder shall enclose copies of its published audited Annual reports of preceding three years, confirm compliance. | | - | Allowed |
| 22 | Confirm your offer is in complete compliance with the scope as specified in the bid document. | | - | Allowed |
| 23 | All correspondence must be in English Language Only. Please Confirm. | | - | No |
| 24 | Applicable Income Tax will be deducted at source as per provisions of Income Tax act read with Income Tax Rules at Prevailing Rates. Please confirm. | | - | No |
| 25 | Bidders to confirm that Income tax deduction at source shall be done by HPCL on payments to be made to successful bidder,at applicable rates. Bidder to confirm his acceptance to the same. | | - | No |
| 26 | Confirm your acceptance to Payment Terms mentioned in Bidding Document. | | - | No |
| 27 | Confirm all incidental expenses outside India and within India shall be undertaken by Bidder. | | - | No |
| 28 | Please confirm acceptance of integrity pact attached with tender document and Upload the same. | | - | Allowed |
| 29 | All Bank Charges and Stamp duties payable outside India in connection with the payments to be made under the Purchase Order shall be borne by the bidder. All Bank Charges and Stamp duties payable in India (only Owner banker) shall be borne by Owner. | | - | No |
| 30 | We Messers.....confirm that we are not under liquidation, court receivership or similar proceedings. | | - | Allowed |
| 31 | Confirm you have been registered with Indian Service Tax Department. | | - | Allowed |
| 32 | Write your Service Tax Registration no. here and also enclose copy of Service Tax registration documents along with unpriced bid document. | | - | Allowed |

| | | | | |
|---|---|---|---|---|
| 33 | Confirm your quoted price are in line with Bidding Document. | | - | No |
| 34 | Please confirm submission of Original Power of Attorney and also upload the scanned copy of the same here. | | - | Mandatory |
| 35 | TERMS AT SN 36 to 44 MEANT ONLY FOR INDIAN BIDDER. | | - | No |
| 36 | If offer is based on certain imported raw materials OR components required for goods offered, Please note and<br>specify the following.. | | - | No |
| 37 | i. Owner will not provide any Import License for the same | | - | No |
| 38 | ii. Confirm that you have quoted prices on Merit rate of Customs duty (without essentiality certificate) | | - | Allowed |
| 39 | iii. Confirm you have furnished built in CIF import content in your quoted prices. | | - | Allowed |
| 40 | iv. Indicate rate of customs duty considered and included in the quoted prices | | - | Allowed |
| 41 | v. Indicate classification(s) under which Bidder intents to import | | - | Allowed |
| 42 | vi. Confirm that any upward variation due to wrong classification(s) considered in Offer shall be absorbed by the Bidder, whereas any downward variations on account of the same shall be passed on to the Owner. | | - | Allowed |
| 43 | vii. Please note and Confirm that any variations in Foreign Exchange rates and in Customs duty on the built in CIF import content shall be to Owners account as per terms specified in the bid document cl. No 5.4.6 of SCP. | | - | Allowed |
| 44 | viii. Confirm Bidder shall claim variation on account of Customs duty and or foreign exchange rate, separately after<br>receipt of goods at site, against documentary evidence | | - | Allowed |
| 45 | TERMS AT SN 46 to 52 MEANT ONLY FOR FOREIGN BIDDER. | | - | No |
| 46 | Specify Country of Origin of Goods offered | | - | Allowed |
| 47 | Specify the Currency of quote (in accordance with terms specified in Bid document) | | - | No |
| 48 | Indicate estimated shipping net and gross weight and Volume | | - | Allowed |
| 49 | Confirm your quoted prices include transit Insurance upto FOB Port of Shipment | | - | No |
| 50 | All taxes, duties and levies of any kind payable upto FOB Port of shipment shall be borne by the Bidder. | | - | Allowed |
| 51 | All Bank Charges and Stamp duties payable outside India in connection with the payments to be made under the Purchase Order shall be borne by the Bidder. | | - | No |
| 52 | Foreign Bidders, who are generally not registered with Service tax department of India to note that in absence of such registration, Owner HPCL shall make Service tax payments to Indian Service tax department, as per prevailing regulations. Foreign bidders to confirm that they have taken note of this requirement and confirm that they have not included the Service Tax in the Quoted rates. Please confirm. | | - | Allowed |
| 53 | In case of Foreign Bidders , Please Indicate Name of International Sea Port of Exit as per Price Schedule,Indian<br>Bidders please mention NA | | - | Allowed |
| 54 | In case of Foreign Bidders , Please confirm that Letter of Credit shall be opened through a scheduled Bank and hence need not be confirmed. In case Bidder insist for a confirmed LC. confirmation charges will be to bidder account. Confirm acceptance.Indian Bidders please mention NA | | - | No |
| 55 | In case of Foreign Bidders ,Confirm your quoted prices include transit Insurance upto FOB Port of Shipment,Indian Bidders please mention NA | | - | No |
| 56 | In case of Foreign Bidders ,please confirm that All taxes duties and levies of any kind payable upto FOB Port of shipment shall be borne by the Bidder,Indian Bidders please mention NA | | - | No |
| 57 | Below mentioned two clauses are applicable to for Indian Bidders and Foreign Bidders having Permanent Establishment in India | | - | No |
| 58 | Confirm that the rates quoted in online price bid are all Inclusive of all taxes and duties payable inside in case of indian bidders as well as outside India in case of foreign bidders including Income Tax deduction at source and also exclusive of Service tax payable in India, reimbursable only against valid tax invoice .Service tax to be quoted in online tax sheet seperately.Bidders to note that Evaluation shall be done as per the taxes(Service tax) quoted by the bidder, however payment shall be made against the quoted taxes and duties or payable as per statute whichever is less | | - | Allowed |
| 59 | Confirm you have furnished recommended spares list for 2 Year Normal Operation Spares with prices which are valid for next 2 years after defect liability period and this criterion will not be a part of evaluation of bid | | - | Allowed |
| 60 | UPLOAD BQC QUALIFICATION DOCUMENTS-1 | | - | Allowed |
| 61 | UPLOAD BQC QUALIFICATION DOCUMENTS-2 | | - | Allowed |
| 62 | UPLOAD BQC QUALIFICATION DOCUMENTS-3 | | - | Allowed |
| 63 | UPLOAD BQC QUALIFICATION DOCUMENTS-4 | | - | Allowed |
| 64 | UPLOAD BQC QUALIFICATION DOCUMENTS-5 | | - | Allowed |
| 65 | Confirm your Compliance to Reverse Auction Terms and Conditions and its procedure | | - | Allowed |
| 66 | Any other Document | | - | Allowed |
| 67 | Any other Document | | - | Allowed |
| 68 | Any other Document | | - | Allowed |
| 69 | Any other Document | | - | Allowed |
| 70 | Any other Document | | - | Allowed |
| 71 | NSIC OR PSU (a) NSIC :Are you registered with NSIC OR MSE (copy of registration to be attached if applicable ) . (b) PSU : Indicate whether you are a Govt. of India Undertaking.<br>(Self declaration regarding PSU on letter head shall be attached, if applicable). | | - | Allowed |

**Tender No. : 16000017-HD-11994**

Tender Published On : 08-Mar-2017 16:18

| Tips for Bidders | | | | |
|---|---|---|---|---|
| Sl.No. | Description | HPCL File | HPCL Value | Supporting Doc. Req'd |
| 1 | Tips for successful Bid Submission | TipsBidsubmission.PDF | - | No |

# Tips for successful bid submission in the HPCL e-Procurement platform

As you are aware, HPCL has rolled out an improved e-Procurement portal for floating of tenders and receiving bids. The new application is simpler and more users friendly compared to the previous system. Further it is designed to ensure security and confidentiality of your bids till the tender opening and provide transparency after bid opening. **However, it has been observed in few instances that vendors tend to submit their bid only in the last hour even when they are submitting bid on this platform for the first time and for some reasons are not able to submit their bids within due time**. **The following document is prepared based on such vendor experiences, so that you can avoid such pitfalls and successfully submit bid in the new system:**

1. **Please note that in the current system you are NOT required to download the tender, take a print of the same followed by physically signing on all pages of the tender. You are also not required to scan the signed tender document and upload the same. Simply generate the technical bid pdf / priced bid pdf, digitally sign, encrypt and upload same for bid submission**.
2. Please start the process of bid preparation well in advance and do not wait for the last moment to get DC validated/prepare the technical bid and priced bid. In the current system the process mimics the manual bidding procedure. You have to enter all the necessary technical responses in the form provided (i.e., upload necessary pdf documents like vendor declaration form and answer the questions).You also have to enter the rates for various items followed by taxes and **preferably save the work in your local machine(Tab-"Work without attaching doc")**. **Please note that during this process we are not capturing any data entered by you in the server**.
3. You get to **save work** only if you work in the tab "**Work without attaching docs**"and you **only generate the bid documents** in tab "**Attach doc and generate envelope**". You will **not** be able to generate the bid from tab"Work w/o attaching doc". **Only after you submit the digitally signed document, the same is stored in the server in encrypted format**. The main points are:
   a. **You can go to the forms any number of times and generate any number of Technical bid pdf and priced bid pdf before you finally submit the same – (however system will allow only for uploading the latest generated document).**
   b. **You may generate both the documents, digitally sign and keep it ready, in case you want to submit the same only on last day. However, it is recommended, not to wait till the last day as traffic congestion, unforeseen connectivity issue or other aspects may adversely affect your bid submission chances.**
   c. **If you have already submitted a bid and you do not want to submit a modified bid, you also have the option to withdraw the submitted bid. You may select tender from home screen and go to "Prepare tender">>"Regret" for same.**
4. Please note that the larger your bid size, the lesser are the chances of successful bid submission in the system. This is not for the fact that server cannot receive big files, but the fact that traffic congestion, connectivity speed, type of connection and other aspects adversely affect the time taken for upload of large files. So it may happen

that the session times out before the entire upload is completed (**The current session out time is 30 minutes**). The main points are:

a. **Please keep the size of the bid document within 40-45 MB (max). To keep the size of the bid document low, you must scan all the documents in low resolution, preferably 150-200 dpi wherein the data should be legible. Further please scan in grayscale and not color to reduce file size. For large drawings, please scan the same in jpeg format and later covert same to pdf to reduce size of pdf document.**
b. **Whenever there is a requirement to upload supporting documents like old PO copies, or credential document, please focus on the main requirement. If the PO copies are meant to arrive at value of jobs executed, you may scan only the first page(where name of client is given) and last page of the PO(where value of PO) is mentioned. This way you can avoid unnecessarily inflating the size of bid document.**
c. **Pl ensure to upload all such supporting documents in your bid which can have a financial implication while arriving at the net delivered cost as such documents cannot be received at the technical evaluation stage.**

5. In case of any doubt regarding the tender, you may raise queries to clarify the same before due date. **Please remember that for every tender, the query start date and query end date is specified in the first page of the tender document. You cannot raise any query after the query end date is over, so it makes sense to start the bid preparation process early.**
6. **And finally, if you have any issue during the bid preparation process, pl get in touch with e-procurement helpdesk at 022-42100111 and seek help. However, you must seek help at least two to three days (min) in advance so that if there is really any issue, we have time to remedy the same. You will realize that, helpdesk can do very little if you are calling up helpdesk on the last day/last hour.**

## *Supplementary section on saving work*

**As with any application, the e-procurement application also has multiple options to generate the bid documents based on requirement of vendors. The two broad classification to generate bid document, be it "Pre-qualification bid" or "Technical/Priced bid" are as follows:**

1. **Low value tender having 20-50 items and limited uploads/questions- Most of the tenders floated by locations are of this nature. Since the No of items where rate is to be entered is very limited and there are not too many questions, vendors can directly click on "Prepare tender">> "Generate Technical/Priced bid" >> "Attach document and generate envelope", enter the item rates, upload documents etc and directly click on "Generate technical bid", followed by "Generate Priced bid". However, there is no option to save the work. So if the vendor wishes to resubmit the bid with modified rates, they have to enter rates for all items again and similarly enter all other responses again. While this method is very fast for generation of bids, it requires full efforts in redoing same if need arises.**
2. **Moderate to high value tender having more than 50 items and other uploads – Though the number of such tenders is lesser, these are more crucial in nature for obvious reasons. For such tenders, the first method of generating bid can be very risky as there is no option to save interim work. Further, the session**

out time for application is 30 minutes, which means if you do not click on "generate bid" button within 30 minutes of landing in the page the work can get lost. The correct method is as follows:

a. Click on "Prepare tender" >> "Generate Technical/Priced bid" >> "Work without attaching document". Here you must enter the rates, enter responses to question etc, except for uploading the documents. Once you have made adequate entries and nearing 20 minutes, please click on the tab "Save work on local computer", show the path as "Desktop" or "My document" etc and save your work". An xml file containing your data will get saved in your computer.
b. Now click on "Upload values from local computer" and show path of saved document. The rates and responses will get filled up till the previous work done and you can fill up rates of balance items from that point. Save your work when you are approaching 20 minutes. You can do this as many times required. The main advantage is that your work is always saved and available for use.
c. Once you are through with all the rates and responses, you may click on the tab "Generate Technical and Priced bid envelope">> "Attach doc and generate envelope". Now click on the tab at the bottom of screen "Update value from local computer". You will see that all the item rates and responses have got populated against appropriate section. Now you may show path of documents to be uploaded if any.
d. Once you find that all rates are entered, responses are filled up and documents are uploaded, you may click on "Generate technical bid envelope" followed by "Generate Priced bid envelope". You will get an option to save document, which can be saved in "desktop" or My documents".
e. Please note that in case you want to modify some value in your bid document simply click on "Update value from local computer" and show path of xml file. The values will be filled up on screen and will be available for editing. You may make necessary changes and then again "Generate technical bid envelope" followed by "Generate Priced bid envelope".
f. Please remember to upload only the latest generated xml file.

3. The final step requires you to check the pdf document for correctness. If found Ok, it is required to be digitally signed. The digitally signed document is then required to be encrypted by using the "Bid encryption utility", hosted in "utility" tab. This encrypted document shall be submitted by you.
4. Please ensure that you are uploading only the latest generated "Technical bid envelope" and "Priced bid envelope", after digitally signing and encrypting the same.
5. It is recommended that you use the "Signing cum encryption utility" for signing and encrypting the document in one step. Alternately you may install and use "Jsignpdf", which is license free signing utility only for signing.
6. It is also recommended that you check the hash of the document and match it with the hash value given on the screen prior to uploading of bid document. *Please refer "Manual for checking hash before and after signing".*

**Tender No. : 16000017-HD-11994**

Tender Published On : 08-Mar-2017 16:18

| Tender Document | | | | |
|---|---|---|---|---|
| Sl.No. | Description | HPCL File | HPCL Value | Supporting Doc. Req'd |
| 1 | Tender Document | Binder1.pdf | - | No |

# HINDUSTAN PETROLEUM CORPORATION LIMITED

# VIZAG-VIJAYAWADA-SECUNDERABAD (VVSPL) PIPELINE CAPACITY AUGMENTATION PROJECT

(TENDER NO – 16000017-HD-11994 )

(WP Ref No.: 14495-00-PP-ITT-0001)

BIDDING DOCUMENT FOR
SUPPLY OF MAINLINE CENTRIFUGAL PUMPS

WorleyParsons
resources & energy

Prepared by:
WorleyParsons India Pvt. Ltd,
5TH Floor, B wing, "I Think" Lodha Techno Campus
Off Pokhran Road No. 2
Thane (West) 400607, Maharastra
Telephone: +91 22 6781 8000
Facsimile: +91 22 6781 8080
www.worleyparsons.com

© Copyright 2017 WorleyParsons

# TABLE OF CONTENTS


| | | | |
|---|---|---|---|
| **I** | **Chapter 1** | | Notice for Global Invitation For Bids (IFB)<br>Invitation For Bids (IFB) / e-tender |
| **II** | **Chapter 2** | | Instructions to Bidders<br>E-Tender Instructions |
| **III** | **Chapter 3** | | Special Conditions of Purchase |
| **IV** | **Chapter 4** | A | General Purchase Conditions for Indigenous Equipment & Materials |
| | | B | General Purchase Conditions for Imports |
| | | C | Special Packaging Requirement for Foreign Bidders |
| **V** | **Chapter 5** | A | Terms and conditions for Supervision of Erection, Testing and Commissioning |
| | | B | Terms and conditions for Training |
| | | C | Terms & Conditions for Annual Maintenance Charges |
| **VI** | **Chapter 6** | | Bid Form and Price Schedule Formats |
| **VII** | **Chapter 7** | | Delivery Schedules |
| **VIII** | **Chapter 8** | | Agreed Terms & Conditions – Questionnaire |
| **IX** | **Chapter 9** | | **Proformae / Annexures**<br>A : Bid Security Form<br>B : Contract Performance Bank Guarantee<br>C : Letter of Authority for attending Pre-Bid Meeting & Unpriced<br>D : Declaration Form<br>E : Undertaking of Adequate Capacity<br>F : Bidder's Queries<br>G : NSIC Certificate Details<br>H : Certificate of Non-Involvement of Agent<br>I : Proforma for Details of Indian Agent<br>J : Declaration Details for Marine Transit Insurance<br>K : Bidder's General Information<br>L : Annual Turnover Form<br>M : Integrity Pact<br>N: Bank Guarantee Format for release of advance payment |

P : Technical Check list
Q : Reference list
R : Compliance Statement
S : Grievance Redressal Mechanism
T : Advice from supplier/contractor for E-payment
U : Reverse Auction Clause
V: Detailed Addresses of sites
X : Bank Guarantee For Security Deposit
Y : Arbitration Clause
Arbitration Clause In Foreign Procurement

**X Chapter 10** Material Requisition– MR (MR No.14495-00-ME-REQ-0001**)**

# Chapter – 1

- Notice For Global Invitation For Bids (IFB)
- Invitation For Bids (IFB) / e-tender

# GLOBAL NOTICE INVITING TENDER

M/s. WorleyParsons India Pvt. Ltd. on behalf of Hindustan Petroleum Corporation Limited (HPCL) invites electronic bids (e-tenders) under Single Stage two bid system for supply of Mainline Centrifugal Pumps from eligible Bidders for Visakh Vijayawada Secunderabad pipeline (VVSPL) Capacity Augmentation Project, as per details given in the Tender Document :-

**TENDER NO.: 16000017-HD-11994**

**JOB : Supply of Mainline Centrifugal Pumps**

**1.0**

| | | |
|---|---|---|
| a) | Bidding document on Website | From 08/03/2017 to 07/04/2017 (15:00Hrs IST) |
| b) | Last date of Receipt of bidder's queries for Pre-bid meeting | 18/03/2017 (15:00Hrs IST) |
| c) | Pre-bid meeting date & place | At 11.00 Hrs (IST) on 20/03/2017 at HPCL – VVSPL, Vizag Despatch Station VR – ATP Area, Naval Base (Post) Visakhapatnam. |
| d) | Bid Due date and time of Online submission of bid | Upto 15:00 Hrs (IST) on 07/04/2017 |
| e) | Online Opening Of Techno- Commercial Unpriced bid date and time | At 15:30 Hrs (IST) on 07/04/2017 |
| f) | Earnest Money Deposit / Bid Security | As per Clause No. 04 |
| g) | Tender Document Fee | Not applicable |
| h) | Online Price Bid Opening/Reverse Auction | Date & time shall be intimated to techno - commercially accepted bidders only at later stage before price bid opening/Reverse auction. |

# DETAILED NOTICE FOR INVITATION FOR BIDS

## UNDER INTERNATIONAL COMPETITIVE BIDDING (ICB)
## FOR
## SUPPLY OF MAINLINE CENTRIFUGAL PUMPS FOR VIZAG-VIJAYAWADA-SECUNDERABAD (VVSPL) PIPELINE CAPACITY AUGMENTATION PROJECT
## OF
## M/S HINDUSTAN PETROLEUM CORPORATION LTD.

### (BIDDING DOCUMENT NO: 16000017-HD-11994 )
### (WP REFERENCE NO:14495-00-PP-ITT-0001)

M/s Hindustan Petroleum Corporation Limited (hereinafter referred to as "HPCL") has appointed WorleyParsons India Pvt. Ltd. (hereinafter referred to as "WorleyParsons") as EPMC for the project.
WorleyParsons on behalf of HPCL invites Bids through e-tendering on International Competitive Bidding basis for Supply of Mainline Centrifugal Pumps for VVSPL Capacity Augmentation Project (VVSPL) under single stage two-bid system from competent suppliers meeting the Bidder Qualification Criteria (BQC) as detailed herein. Bids submitted online in e-tender portal of HPCL https://etender.hpcl.co.in shall only be considered for processing.

**1.0 BRIEF PROJECT DETAILS:**

HPCL is currently pursuing to expand Vizag refinery from the current name plate capacity of 8.3 MMPTA to 15 MMTPA with a yield of 11.85 MMTPA for MS, HSD & SKO. In-line with refinery expansion plan, HPCL is also planning to take up capacity augmentation of existing VVSPL (Vizag Vijayawada Secunderabad Pipeline) from 5.38 MMTPA to 7.9 MMTPA simultaneously.

Capacity augmentation is proposed by implementation of new pump stations at existing IPS-1 (Ch. 92.9 km), IPS-2 (Ch. 264.5 km), SV-17 Station and also by upgrading the existing booster pump facilities in Vizag, Rajahmundry, Vijayawada, Suryapet and in Secunderabad. It also covers formulating and integration of new facilities with existing Electrical, Instrumentation, PLC, SCADA, APPS including LDS, OWS system, piping arrangements.

**2.0 SCOPE OF SUPPLY:**

The scope of work includes (but not limited to) the Design, Engineering, Procurement of bought out items, Supply, Manufacturing, Fabrication, Assembly, Painting, Inspection, Testing, Packing & Forwarding, Delivery and Supervision of Installation, Commissioning for Mainline Centrifugal Pumps, installation of Instrument packages, demo & training to HPCL personnel at HPCL, Annual Maintenance Contract for VVSPL Capacity Augmentation Project, (As per Scope of Supply & Works mentioned in e-tender)

## 3.0 BIDDER QUALIFICATION CRITERIA (BQC):

## 3.1 TECHNICAL CRITERIA

3.1.1 Bidder for the complete package (pump, driver & VFD), shall be the manufacturer of the offered Pumps and shall be the Single Point Responsibility (SPR) entity for the complete package offered (pump, driver, VFD and all other components included in the scope of supply).

3.1.2

a. Bidder should have designed, engineered, manufactured, packaged, integrated, tested, supplied and commissioned API 610, 10$^{th}$ or 11$^{th}$ edition pumps in last seven years ending 28/02/2017, at least two pump packages, comprising of pump, motor and VFD (pumps of same or higher flow rate and Head with same type of Lubrication system, power and incoming voltage level same as that for the Pumps being offered in this tender) from the proposed manufacturing plant and at least one of these should have completed satisfactorily the continuous operation of 1 year as on the bid due date.

b. In Case the above references as per clause 3.1.2 (a) is not having VFD, the bidder shall furnish at least ONE (1) additional past supply reference of multistage centrifugal pump (may be from their own different model series) equipped with a VFD of range of 1700 KW, 6600 Volts or higher rating which has been engineered, designed, packaged, tested, supplied, in the last Seven (7) years ending 28/02/2017, from the proposed manufacturing plant. As a minimum, this package should have completed satisfactory continuous operation of 1 year as on bid due date.

3.1.3 The Bidder, during the last seven years ending 28/02/2017, should have successfully completed the **Manufacturing & Supply of "API Centrifugal Pumps - API 610 of 10th edition or later"** meeting either of the following:-

| | | **Domestic Bidders** | | | **Foreign Bidders** | | |
|---|---|---|---|---|---|---|---|
| Sl. No. | Schedule details | One Similar (*) order executed & completed of value not less than | **Or** Two Similar (*) order executed & completed each of value not less than | **Or** Three Similar (*) order executed & completed each of value not less than | One Similar (*) order executed & completed of value not less than | **Or** Two Similar (*) order executed & completed each of value not less than | **Or** Three Similar (*) order executed & completed each of value not less than |
| | | **INR (IN LAKHS)** | | | **MILLION USD** | | |
| 1 | Schedule 1 (Pumps for Vizag, Rajamundry & Vijayawada) | 1883.47 | 1177.17 | 941.73 | 2.82 | 1.76 | 1.41 |
| 2 | Schedule 2 (Pumps for IPS-1) | 1831.45 | 1144.66 | 915.73 | 2.74 | 1.71 | 1.37 |
| 3 | Schedule 3 (Pumps for IPS-2) | 1831.45 | 1144.66 | 915.73 | 2.74 | 1.71 | 1.37 |
| 4 | Schedule 4 (Pumps for SV-17 ,Bogaram, IPS-3) | 1303.03 | 814.39 | 651.51 | 1.95 | 1.22 | 0.97 |
| 5 | Schedule 5 (Pumps for Suryapet) | 1094.23 | 683.90 | 547.12 | 1.64 | 1.02 | 0.82 |

**(*) Definition of "Similar Order":- Manufacturing and Supply of either API centrifugal pumps or Package comprising of Pump, Motor & VFD).**

**Note:**

1. In case bidder quotes for more than one schedule as stated above, the requirement of value of similar completed works shall be on cumulative value basis for quoted schedules. In case of any shortfall, the bidder will not be qualified for cumulative schedules, however may get qualified for individual schedules.

2. Bidder shall furnish necessary documentary evidence by uploading the documents in the e-portal of HPCL, such as notarized copies of purchase order/work order (clearly indicating scope of work), inspection release note, final invoice, certified bills from client, completion certificates from client.

3. For the Bidders who are submitting Purchase orders against bid qualification criteria in a currency other that INR and USD, purchase order value/Financial statements etc. will be converted into Indian Rupees at the Bill selling rates on the date of un-priced Bid opening (Bid due date), as available in State Bank of India, Mumbai (on the date of un-priced bid opening). In case, exchange rate is not available in State Bank of India (Mumbai), alternative sources viz. Economics Times shall be considered for all the currencies.

## 3.2 COMMERCIAL

### 3.2.1 FINANCIAL CRITERIA:

Bidder shall meet all the following criteria:

Bidder shall have achieved minimum average Annual Financial turnover as per audited financial results in the last 3 financial / calendar (2014,2015,2016) for companies having financial year ending in December or 2013 -2014, 2014 - 2015 , 2015- 2016 for companies having financial year having other than December.

| Sl. No. | Schedule Details | Domestic Bidders | Foreign Bidders |
|---|---|---|---|
| | | Average Annual financial turnover during the last 3 years, ending 31st March 2016, should be at least Rs. (In Lakh) | Average Annual financial turnover during the last 3 years, ending 31st March 2016*, should be at least US Dollars (In Million USD) |
| 1 | Schedule-1 (Pumps for Vizag, Rajamundry & Vijayawada) | 706.30 | 1.06 |
| 2 | Schedule-2 (Pumps for IPS-1) | 686.79 | 1.03 |
| 3 | Schedule 3 (Pumps for IPS-2) | 686.79 | 1.03 |
| 4 | Schedule 4 (Pumps for SV-17,Bogaram,IPS-3) | 488.63 | 0.73 |
| 5 | Schedule 5 (Pumps for Suryapet) | 410.34 | 0.61 |

**Note:**

1. In case bidder quotes for more than one schedule as stated above, the requirement of value of similar completed works shall be on cumulative value basis for quoted schedules. In case of any shortfall, the bidder will not be qualified for cumulative schedules, however may get qualified for individual schedules.

### 3.2.2 NET WORTH:

Net worth of the bidder for financial year ending 31st March 2016* should be positive. However it will not be applicable for PSUs approved by HPCL.

***Note: (*):***
*In case Bidders' financial statements are audited in calendar year, bidder's Average Annual financial turnover during the last 3 years, ending Dec- 2016 shall be checked against criteria stated at clause no. 3.2.1 above & Net worth ending Dec- 2016 against criteria stated at clause no. 3.2.2 above.*

Bidder shall furnish necessary documentary evidence by uploading the documents in the e-portal of HPCL, such as notarized copies of audited Annual Report/Balance Sheet for last three years as mentioned above, Original Certificate from Chartered Account indicating Turnover & Net worth.

**Notes for Above Cl.No 3.1 & 3.2:-**

1. Bidders submitting bid for *any specific schedule* shall furnish EMD / BQC documentation pertaining to that specific schedule.
2. Bidders submitting bid to be considered for *any one of the schedules* shall furnish EMD/ BQC documentation for the top most schedule.

3. Bidders submitting bid to be considered for *any specific combination of schedules* shall furnish EMD / BQC documentation which shall be cumulative of that for specific schedules.
4. Bidders submitting bid to be considered for *any combination of schedules (Two/Three/Four)* shall furnish EMD / BQC documentation which shall be cumulative of that for top (Two/Three/Four) schedules as the case may be.

For cases in sl 2, 3 & 4 above, bidders to ensure that they furnish price quote for all the items in all the schedules.

## 3.3 GENERAL:

3.3.1 Bidder shall meet the technical as well as commercial qualification criteria as stated above. Support documents pertaining to bidders Qualification criteria have to be uploaded under Bid common forms Tilted "Bidders Qualification Criteria". Two formats namely BQC –Technical & BQC-Financial are given in tender common forms under the same heads. These documents after duly filled, signed & stamped have to be uploaded under similar heads provided in Bid Common Forms. In absence of requisite documents, HPCL / WorleyParsons reserve the right to reject the Bid without making any reference to the Bidder.

3.3.2 Bidder shall supply electric motor and Variable Frequency Drive (VFD) from manufacturers who shall meet following criterion i) & ii) respectively. This shall be deemed as Equipment qualification criteria and is Independent of Bid Qualification Criteria

**i) Electric Motor**

The electric motor offered shall be from the existing regular manufacturing range of the motor manufacturer.

The motor manufacturer shall have, in last seven years, starting from 01/02/2010 & ending 31/01/2017, designed manufactured, tested and supplied at least two electric motors, equivalent or superior, as compared to offered motor in terms of type of motor, type of lubrication, power rating, voltage rating, percentage of starting current with respect to rated current during DOL operation and speed variation through VFD system from the proposed shop and at least one of these shall have completed satisfactorily the site operation of at least 8000 hours without any major overhaul as on the bid due date. The offered motor shall be manufactured and tested at the same works as for past supplied reference motors and the performance of the past supplied motors shall have been established for the specified technical parameters in shop tests. The above criteria shall be applied individually to each motor rating.

**ii) Variable frequency drive**

Variable frequency drive with close transition (make before break) synchronous transfer (up transfer) and close transition (make before break) de-synchronous transfer (down transfer)

The model of the VFD system offered shall be from the existing regular manufacturing range of the VFD manufacturer. The VFD system manufacturer shall have, in the last seven years from 01/02/2010 and 31/01/2017, designed, manufactured, tested and supplied at least one VFD system with close transition synchronous transfer & de-synchronous transfer equivalent or superior, as compared to offered VFD system in terms of power rating, voltage rating, speed variation range, efficiency, power factor, THD, type of VFD controller from the proposed manufacturing plant and this shall have completed satisfactorily the site operation of at least 8000 hours without any major overhaul as on the date bid submission. The offered VFD system hall be manufactured

and tested at the same works as for the past supplied reference VFD systems. The above criteria shall be applied individually to each rating of VFD system.

3.3.3 The bid evaluation procedure is specified in bid document.

3.3.4 OTHER INFORMATION

1.0 Parties who are affiliates of one another can decide which affiliate will make a bid. Only one affiliate may submit a bid. Two or more affiliates are not permitted to make separate bids directly or indirectly. If two or more affiliates submit a bid, then any one or all of them are liable for disqualification. However up to 3 affiliates may make a joint bid as a Consortium and in which case the conditions applicable to a Consortium shall apply to them. "Affiliate" of a party shall mean any company or legal entity which:

a) Controls either directly or indirectly a party, or
b) Which is controlled directly or indirectly by a Party; or
c) Is directly or indirectly controlled by a company, legal entity or partnership which directly or indirectly controls a party. "Control" means actual control or ownership of at least a 50% voting or other controlling interest that gives the power to direct, cause the direction of the management and material business of the controlled entity.

2.0 Bids may be submitted by:

a) A single person/entity (called sole bidder);
b) A newly formed incorporated joint venture (JV) which has not completed 3 (three) financial years from the date of commencement of business;
c) A consortium (including an unincorporated JV) having a maximum of 3 (three) members;
d) An Indian arm of a foreign company.

3.0 Fulfillment of Eligibility criteria and certain additional conditions in respect of each of the above four (4) types of bidders are stated below, respectively:

a) The sole bidder (including and incorporated JV which has completed three (3) financial years after date of commencement of business) shall fulfill each eligibility criteria.
b) In case the bidder is a newly formed and incorporated joint venture and which has not completed three (3) financial years from the date of commencement of business, then either the said JV shall fulfill each eligibility criteria or any one constituent member/promoter of such a JV shall fulfill each eligibility criteria. If the bid is received with the proposal that one constituent member/promoter fulfills each eligibility criteria, then this member/promoter shall be clearly identified and he/it shall assume all obligations under the contract and provide such comfort letter/guarantees as may be required by Owner. The guarantees shall over inter alia the commitment of the member/promoter to complete the entire work in all respects and in a timely fashion, being bound by all the obligations under the Contract, an undertaking to provide all necessary technical and financial support to the JV to ensure completion of the work, etc.
c) In case the bidder(s) is/are a consortium (including an unincorporated JV), then the following conditions shall apply:

1) Each member in consortium may only be a entity and not an individual person;
2) The bid shall specifically identify and describe each member of the consortium;
3) The consortium member descriptions shall indicate what type of legal entity the member is and its jurisdiction of incorporation (or of establishment as a legal entity other than a corporation) and provide evidence by a copy of the articles of corporation (or equivalent documents);
4) One participant member of the consortium shall be identified as the **“Prime**

**member"** and contracting entity for the consortium;

5) This prime member shall be solely responsible for all aspects of the Bid/proposal including the execution of all tasks and performance of all consortium obligations;
6) The **prime member** shall fulfill each eligibility criteria;
7) A commitment shall be given from each of the consortium members in the form of a letter signed by a duly authorized officer clearly identifying the role of the member in the Bid and the member's commitment to perform all relevant tasks and obligations in support of the Prime/lead member of the Consortium and a commitment not to withdraw from the consortium;
8) No change shall be permitted in the number, nature or share holding pattern of the consortium members after pre-qualification, without the prior written permission of the Owner (HPCL).
9) No change in project plans, timetables or pricing will be permitted as a consequence of any withdrawal or failure to perform by a consortium member;
10) No consortium member shall hold less than 25% stake in a consortium;
11) Entities which are affiliates of one another are allowed to bid either as a sole bidder or as a consortium only;
12) Any person or entity can bid either singly or as a member of only one consortium.

d) In case the bidder is an Indian arm (subsidiary, authorized agent, branch office or affiliate) of a foreign bidder, then the foreign bidder shall have to full fill each eligibility criteria. If such foreign company desires that the contract be entered into with the Indian arm, then a proper back to back continuing (parent company) guarantee shall be provided by the foreign company clearly stating that in case of any failure of any supply or performance of the equipment, machinery material or plant or completion of the work in all respects and as per the warranties/guarantees that may have been given, then the foreign company shall assume all obligations under the contract. Towards this purpose, it shall provide such comfort letter/guarantees as may be required by Owner. The guarantees shall cover inter alia the commitment of the foreign company to complete the entire work in all respects and in a timely fashion being bound by all the obligations under the contract, an undertaking to provide all necessary technical and financial support to the Indian arm or to render the same themselves so as to ensure completion of the contract when awarded, an undertaking not to withdraw from the contract till completion of the work etc.

## 4.0 EARNEST MONEY DEPOSIT (EMD) / BID SECURITY:

Bid Security / EMD for Quoted Schedule(s) shall be as mentioned below: -

| Sl. No. | Schedule Details | EMD - Domestic Bidder ( in Lakhs) | EMD - Foreign Bidder (USD) |
|---|---|---|---|
| 1 | Schedule-1 (Pumps for Vizag, Rajamundry & Vijayawada) | 33.54 | 50,193 |
| 2 | Schedule-2 (Pumps for IPS-1) | 32.89 | 49,220 |
| 3 | Schedule 3 (Pumps for IPS-2) | 32.89 | 49,220 |
| 4 | Schedule 4 (Pumps for SV-17,Bogaram,IPS-3) | 26.29 | 39,336 |
| 5 | Schedule 5 (Pumps for Suryapet) | 23.02 | 34,442 |

**Note:**

(a) In case bidder opts to quote for more than one Schedule(s), EMD shall be submitted on cumulative basis for the quoted Schedule(s)

(b) Public Sector Enterprises and Small scale industries (Registered with NSIC) are exempted from submission of Bid Security. However to claim the exemption Public Sector Enterprises shall submit a declaration on their letter head and Small Scale Industries shall submit valid copy of NSIC Registration Certificate.

(c) In case of Consortium (including an unincorporated JV), the bid security shall be submitted by the “Prime Member”.

4.1.1 The bid security/EMD is required to protect the Owner against the risk of Bidder’s conduct, which would warrant the security’s forfeiture.

In e-tenders, a scanned copy of Bid Security/EMD or MSE Certificate seeking exemption shall also to be uploaded with the offer at e-portal https://etender.hpcl.co.in.
EMD shall be accepted in the form of demand draft/ pay order, banker’s cheque (in favour of “ **Hindustan Petroleum Corporation Limited** ”, payable at Bangalore), issued by any Scheduled bank other than cooperative bank or in the form of Irrevocable Bank Guarantee issued by any Scheduled bank other than cooperative bank in case of Domestic Bidder and, in case of foreign bidder in the form of demand draft/ pay order, banker’s cheque (in favour of “ **Hindustan Petroleum Corporation Limited** ”, payable at Bangalore) issued by any reputed international bank or in the form of Irrevocable bank guarantee from any reputed international bank with bank guarantee to be confirmed by any Indian Scheduled Bank other than Co-operative Bank located in India.

In case EMD is submitted in the form of Bank Guarantee by Domestic Bidder, it should be made on non-judicial stamp paper of appropriate value (denomination) and should be valid for SIX (6) months from due date / extended due date of the tender (as per the proforma attached in the General Terms and Conditions in the format at Annexure-A of Chapter-9), however, demand draft / pay order/ Banker’s Cheque may be valid for three months for Domestic as well as foreign bidders.

Cheque / FDR or EMD in any other form shall be treated as offer without EMD and shall not be acceptable. Bid Security received late due to any reasons shall be rejected.

4.1.2 EMD (original instrument: DD/Pay order/ Banker's Cheque OR Bank Guarantee)/ EMD exemption document should be kept in separate envelope (super-scribed with tender number, job & due date) and should be deposited by tender due date and time, in the **tender box** provided in the office of :-

D P SRIVASTAVA
Manager - Purchase
**Hindustan Petroleum Corporation Limited**
VVSPL Capacity Augmentation Project
2nd Floor, No.332, Darus Salam Building
Queen's Road
Bangalore-560052
India.

4.1.3 In case the EMD (original instrument) is not deposited in the tender box (as mentioned above) by tender due date and time, the offer of bidder shall be rejected. Owner / Consultant shall not be responsible for any postal delays or non-receipt of EMD by tender due date and time, reasons whatsoever.

4.1.4 Bidders are requested to advise their BANKS not to post Bank Guarantee/or any Other EMD/Bid security document directly to HPCL, as the Bid Security/EMD is to be submitted as mentioned in para 4.1.2.

4.1.5 The EMD shall be held interest free and no bank charges shall be payable by Owner / Consultant towards the EMD submitted by the bidders.

4.2 EMD FORFEITURE (In case EMD is applicable) AND FURTHER ACTION AS PER CORPORATION'S (HPCL) POLICY:-

EMD submitted by the bidder for subject tender shall be forfeited in following cases:-

(i) Withdrawal of bid in interval between the deadline for submission of bids and the expiration of the period of bid validity specified by the bidder (To be read in conjunction with clause no. 12.3 of ITB).
(ii) Unsolicited post bid modification (To be read in conjunction with clause no. 15.8 of ITB).
(iii) Price changes against technical/commercial clarification, if any, in line with terms & conditions of enquiry documents are not allowed. (To be read in conjunction with clause no. 15.8 of ITB)
(iv) Conditional Price Bids.
(v) Non –Withdrawal (by evaluated lowest bidder) of deviations mentioned elsewhere other than on-line deviation sheet.
(vi) Any new deviation stipulated after tender due date (To be read in conjunction with point no. 12.4 of ITB)
(vii) Unsolicited Post Bid Revision in Taxes & Duties.
(viii) Violation of Integrity Pact (If Applicable).

DISCLAIMER:- Besides above, Owner/Consultant reserves the right to forfeit the EMD of bidder (In case EMD is applicable) and take further action as per corporation's (HPCL's) policy in case bidder deviates from his submitted offer / adopt unfair practices.

4.3 **REFUND OF BID SECURITY / EARNEST MONEY DEPOSIT**

EMD should be refunded to other than lowest evaluated bidder(s), immediately upon completion of price evaluation, by means of A/c Payee cheques or e-payment.

The successful Bidder's bid security will be discharged upon the Bidder's accepting the Contract/ Purchase Order, and furnishing the requisite bank guarantee / security Deposit in line with the tender terms and conditions.

**5.0 DELIVERY PERIOD:**
**Refer Chapter – 7 for completion period.**

**6.0 PRE-BID MEETING – IF APPLICABLE:**

6.1 Pre-Bid Meeting shall be held as mentioned in Clause No.1.0 of NIT.

6.2 All question/ queries should be referred to Owner/Consultant not later than 3 (three) days before Scheduled date of pre-bid meeting and HPCL/WorleyParsons reserves the right not to entertain any pre-bid query after cut-off date. Reply to Pre-Bid Queries shall be hosted on HPCL Tender website.

6.3 Bidders in their own interest are advised to take part in the pre-bid meeting by deputing their competent personnel. This will help bidder not only to cut short of the evaluation time leading to requirement of shorter bid validity but also enable them to submit their best prices based on the clear techno-commercial scope.

**7.0 GENERAL**

7.1 Owner /Consultant reserve the right to carry out capacity & capability assessment of the bidder using in –house information and past performance.

7.2 Owner/Consultant shall not be responsible for any costs or expenses incurred by Bidder in connection with the preparation or delivery of Bids, site-visit and other expenses incurred during bidding process, regardless of the outcome of the bidding process.

7.3 In case any bidder is found to be involved in cartel formation, his bid will not be considered for evaluation / placement of order. Such bidder will also be debarred from bidding in future.

7.4 Canvassing in any form by the bidder or by any other agency on their behalf may lead to disqualification of their bid.

7.5 Unsolicited clarifications to the offer and / or change in the prices during the validity period would render the bid liable for rejection.

7.6 Bidder shall not be under liquidation, court receivership or similar proceeding.

7.7 Net Worth of bidder shall be calculated as per the formula below:

Net worth means paid up share capital, Share Application Money pending allotment* and reserves# less accumulated losses and deferred expenditure to the extent not written off.

# Reserves to be considered for the purpose of net worth shall be all reserves created out of the profits and securities premium account but shall not include reserves created out of revaluation of assets, write back of depreciation and amalgamation.

*Share Application Money pending allotment will be considered only in respect of share to be allotted.

Accordingly, the definition of Net worth shall be as follows:

| | |
|---|---|
| Paid up share capital | XXXX |
| Add: Share Application Money pending allotment | XXXX |
| Add: Reserves (As defined Above) | XXXX |
| Less: Accumulated Losses | XX |
| Less: Deferred Revenue Expenditure to the extent not | XX |

written off

**Net worth** **XXXX**

7.8 In case a bidder is having wholly owned subsidiaries but only a single consolidated annual report is prepared and audited which includes the financial details of their wholly owned subsidiaries, consolidated audited annual report shall be considered for establishing the financial criteria subject to statutory auditor/ chartered accountant of the bidder certifying that separate annual report of bidder (without the financial data of subsidiaries) is not prepared and audited.

Further, in case a bidder is a subsidiary company and separate annual report of the bidder is not published, but only a consolidated annual report of the Parent Company is available, consolidated audited annual report shall be considered for establishing the financial criteria subject to statutory auditor/ chartered accountant of the bidder certifying that separate annual report of bidder is not prepared and audited.

7.9 In the event of submission of any document / certificate/ Audited Annual Financial Results by the bidder in a language other than English, the bidder shall get the same translated into English and submit the same after getting the translation duly authenticated by local Chamber of Commerce of Bidder's country.

7.10 Owner /Consultant will follow purchase preference policy as per prevailing guidelines of Govt. of India.

7.11 Clarification if any, can be obtained (on working days, between 09:00 Hrs to 16:00 Hrs) through Telephone nos: +91 6192 56 56 Ext: 701 / 1187 and/or E-mail: Kameshwar.Kavuri@WorleyParsons.com; ( Project Manager)

Mangesh.Thasal@WorleyParsons.com ; (Procurement – Lead)

For any technical queries related to operation of the portal please send mail to eprochelpdesk@mail.hpcl.co.in OR please call us at 022-41146666. The helpdesk support is available 6 days a week from 8AM to 8 PM (except public holidays).

**Procurement - Lead**

Mangesh Thasal

WorleyParsons India Pvt. Limited

# Chapter – 2

INSTRUCTION TO BIDDERS (ITB)

# INDEX


| SR. NO. | DESCRIPTION |
|---|---|
| 1.0 | COST OF BIDDING |
| 2.0 | BID DOCUMENT |
| 3.0 | AMENDMENT OF BID DOCUMENT |
| 4.0 | LANGUAGE OF BID |
| 5.0 | BID PARTS |
| 6.0 | DOCUMENTS COMPRISING THE BIDS |
| 7.0 | BID FORM AND PRICE SCHEDULE |
| 8.0 | PREPARATION & SUBMISSION OF BIDS |
| 9.0 | BID DUE DATE & TIME |
| 10.0 | PERIOD OF VALIDITY OF BIDS |
| 11.0 | LATE BIDS |
| 12.0 | MODIFICATION & WITHDRAWAL OF BIDS |
| 13.0 | OPENING OF BIDS |
| 14.0 | BID PRICES & BIDDING CURRENCY |
| 15.0 | EVALUATION OF BIDS |
| 16.0 | REJECTION CRITERIA |
| 17.0 | COMPARISION OF BIDS |
| 18.0 | CONTACTING THE OWNER/ OWNER'S CONSULTANT |
| 19.0 | AWARD CRITERIA |
| 20.0 | OWNER'S RIGHT TO ACCEPT ANY BID AND TO REJECT ANY OR ALL BIDS |
| 21.0 | NOTIFICATION OF AWARD |
| 22.0 | ISSUE OF PURCHASE ORDER |
| 23.0 | REBATE |
| 24.0 | FRAUDULENT PRACTICES |
| 25.0 | QUOTED PRICES - PRICE SHALL BE QUOTED CONSIDERING |

# CHAPTER-2

# INSTRUCTIONS TO BIDDERS (ITB)

## 1.0 COST OF BIDDING

1.1 The Bidder shall bear all costs associated with the preparation and submission of the bid, and Owner/ Consultant will in no case, be responsible or liable for these costs, regardless of the conduct or outcome of the bidding process.

## 2.0 BID DOCUMENT

2.1 The bidder is expected to examine all instructions, forms, terms and specifications in the bid document. The Notice Inviting Tender ,Invitation for Bids (IFB) together with all its attachments thereto, shall be considered to be read, understood and accepted by the bidder, unless deviations are specifically stated seriatim by the bidder. Failure to furnish all information required by the bid document or submission of a bid not substantially responsive to the bid documents in every respect will be at bidder's risk and may result in the rejection of his bid.

2.2 The bidder's scope of supplies as specified in the Material Requisition shall be in strict compliance with the scope detailed therein and in the bid document.

## 3.0 AMENDMENT OF BID DOCUMENT

3.1 At any time prior to the bid due date, the Owner may, for any reason, whether at its own initiative or in response to a clarification requested by a prospective Bidder, modify the Bid Document.

3.2 The amendment/corrigendum to tender shall be published at Owner's e-PORTAL

https://etender.hpcl.co.in and HPCL's website www.hindustanpetroleum.com. Bidders are advised to visit these websites regularly to keep themselves updated. In case bidder has submitted the online bid before corrigendum, such bidder shall be required to modify /edit the already submitted bid before tender submission due date/extended due date, whichever is later. In case of bidder submitted the bid without compliance /confirmation /acceptance to corrigendum, he shall not be allowed to revise the bid price /rates on account of compliance/acceptance /confirmation to corrigendum. Such bidder shall be given opportunity during evaluation to accept/confirm compliance to corrigendum without revision in rates and taxes, failing which the bid shall be rejected at the sole discretion of the Owner

3.3 In order to afford prospective Bidder, reasonable time in which to take the amendment into account in preparing their bids, the Owner may, at its discretion, extend the bid due date.

## 4.0 LANGUAGE OF BID

4.1 The bid prepared by the Bidder and all correspondence/ drawings and documents relating to the bid exchanged by Bidder and the Owner/Consultant shall be written in ENGLISH language, provided that any printed literature furnished by the Bidder may be written in another language so long as accompanied by an ENGLISH translation, in which case, for the purpose of interpretation of the bid, the English translation shall govern.

4.2 In the event of submission of any document / certificate / Audited financial report by the bidder in a language other than English, the bidder shall get the same translated into English and submit the same after getting the translation duly certified by local Chamber of Commerce of Bidder's country.

## 5.0 BID PARTS

5.1 Bid shall be in two parts. Part-I shall be unpriced bid & Part-II shall be priced bid. Bidder shall include Bid Security, Integrity pact duly signed & stamped, unpriced price Schedule duly filled as

"quoted" in each cell of price Schedule etc. shall be submitted with Part-I. Duly filled Part-II with price figures shall be submitted in Part-II (in e-portal of HPCL).

## 6.0 DOCUMENTS COMPRISING THE BIDS

6.1 The bid prepared by the Bidder shall comprise the following components:

6.1.1 UNPRICED BID( PART-I):

a) Physical Documents:

- Bid Security - Original DD / BG.
- MSE Registration certificate in lieu of EMD.
- Power of Attorney of bidder's representative digitally signing the bid document

Physical documents in seal envelope containing above documents shall be super scribed with Tender no, Due date and name of the Job to be submitted at the following address on or before Bid Due date and time :-

D P Srivastava
Manager - Purchase
Hindustan Petroleum Corporation Limited
VVSPL Capacity Augmentation Project
2nd Floor, No.332, Darus Salam Building
Queen's Road
Bangalore-560052.
India.

In e-tenders, a scanned copy of Bid Security/EMD or MSE Certificate seeking exemption shall also to be uploaded with the offer at e-portal https://etender.hpcl.co.in.

i. In case Bid Security / EMD is not received as per Clause 04 of NIT (Global Notice Inviting Tender) the offer of the bidder shall be rejected.
ii. In case of availing exemption, MSE Certificate as per the requirement of Clause 04 of NIT (Global Notice Inviting Tender) shall be submitted, wherever applicable.
iii. Bidders are advised to instruct their banks not to post Bid Security directly to HPCL as the same has to be deposited as explained above.

b) Documentary evidence establishing Bidder's claim for meeting Bidder Qualification Criteria as stipulated in the Bid Document. Owner/Consultant reserve the right to call the bidder during evaluation along with originals for verification of the documents submitted by the bidder in his bid. OWNER/ CONSULTANT also reserve the right to get the documents (purchase orders, completion certificates and other documents submitted by the bidder) verified/ confirmed by the issuing authority of these documents.

c) Power of Attorney in favour of person (s) digitally signing the bid that such person (s) is/are authorised to sign the bid on behalf of the bidder and any consequence resulting due to such signing shall be binding on the bidder;

d) Tender document including Corrigendum, if any, and subsequent correspondences duly stamped and signed on each page as a token of acceptance. Please note no hard copy of documents shall be taken in case of e-tender except the documents stated in the note at the end of this clause.

e) All form and format dully filled in.

f) Copies of Purchase Orders, Financial Statement (Audited Balance Sheet including, Profit & Loss Account, Schedule and Independent Auditor Report) for last three preceding financial years.

g) Taxes & Duties Statement – shall be same as filled in Price Schedule & should not be separately submitted by the bidder.

h) Agreed Terms & Conditions duly filled-in & online.

i) Integrity Pact

j) Any other information/details/documents/data required as per Bid Document.

k) NOTE: The documents sought under clause 6.1.1 a are to be received by OWNER by bid submission date & time in hard copy. However, scanned copies of documents under clause 6.1.1 a along with balance documents are to be uploaded at OWNER e-tender website.

6.1.2 PRICED BID ( PART-II):

It shall consist of Price Bid only. It shall be uploaded on the e-portal https://etender.hpcl.co.in

**7.0 BID FORM & PRICE SCHEDULE FORMAT**

7.1 The bidders shall complete the Bid Form and appropriate Price Schedule Format furnished in the Chapter 6 of Bid Document, indicating the required information.

**8.0 PREPARATION & SUBMISSION OF BIDS**

8.1 Bids shall be submitted at the address by the due date & time.

8.2 Documents mentioned in the Bid Document shall be submitted along with the bid by the Bidder.

8.3 Addenda/Corrigenda to the Bid Document, if issued, must be signed and submitted along with the bid.

8.4 Bidders are advised to submit bids based strictly on the terms & conditions and specifications contained in the Bid Document and not to stipulate any deviations.

8.5 **A Bidder( i.e., the bidding entity) shall, on no account submit more than one bid either directly ( as a single bidder or as a member of consortium) or indirectly failing which all bids submitted by such bidder directly & indirectly , shall stand rejected and BID SECURITY shall be Forfeited.**

**9.0 BID DUE DATE AND TIME**

9.1 Bid is required to be submitted through OWNER e-PORTAL https://etender.hpcl.co.in only, on or before the Bid submission date and time.

9.2 The Owner may, at its discretion, on giving reasonable notice by letter/fax/e-mail, or any written communication to all prospective Bidders who have been issued the bid documents, extend the bid due date, in which case all rights and obligations of the Owner and the Bidders, previously subject to the bid due date, shall thereafter be subject to the new bid due date as extended.

9.3 Request for extension of tender submission due date, if any, shall be considered at the sole discretion of Owner. However, Owner reserves the right not to entertain any request for extension received **within two (2) days of tender submission due date/time.**

**10.0 PERIOD OF VALIDITY OF BIDS**

10.1 Bids shall be kept valid for 120 days from the final bid due date. A bid valid for a shorter period shall be considered as non-responsive and will be liable for rejection.

10.2 The Bidder shall not be entitled during the said period of 120 days, without the consent in writing of the Owner to revoke or cancel its bid or to vary the bid given or any term thereof. In case of Bidder revoking or cancelling its bid without the consent of the Owner in writing, the Owner shall forfeit the Bid Security furnished by Bidder.

10.3 Notwithstanding above, the Owner may solicit the Bidder's consent to an extension of the period of bid validity. The request and the responses thereto shall be made in writing. The bid security shall also be accordingly extended.

**11.0 LATE BIDS**

11.1 E-tendering portal shall close immediately after the deadline for submission of bid.

11.2 Bids must be submitted online in e-tendering portal of OWNER. Bids submitted through any other mode shall not be considered for opening / evaluation / award and shall be rejected.

**12.0 MODIFICATION AND WITHDRAWAL OF BIDS**

12.1 The Bidder may modify or withdraw his bid after the bid's submission, provided that the modification/ withdrawal notice is received by the Owners/ Consultant prior to the bid due date & time, but, before the due date and time for submission of Bid following the electronic bid submission procedures.

12.2 No bid shall be modified subsequent to the due date & time or extension, if any, for submission of bids. Bidder(s) to note that unsolicited price changes (including changes in taxes, duties mentioned & their applicability) after submission of bid shall not be allowed. In case any bidder gives unsolicited revised prices/price implication, his bid shall be rejected and EMD/ Bid security submitted by the bidder shall be forfeited, however, any unilateral rebate shall be dealt as per Clause no. 23 of ITB.

12.3 No bid shall be allowed to be withdrawn in the interval between the deadline for submission of bids and the expiration of the period of bid validity specified by the Bidder. Withdrawal of a bid during this interval shall result in the forfeiture of Bidder's EMD/Bid security and further action as per corporation (OWNER) policy.

12.4 No new deviation will be received/ accepted from bidder after bid due date & time. In case bidder submits new deviation, his bid will be rejected. At the sole discretion of the owner bidder may be given opportunity to withdraw the deviation and in case the same is not withdrawn by the bidder, the offer of the bidder shall be rejected.

**13.0 OPENING OF BIDS**

13.1 Unpriced bid shall be opened by OWNER/CONSULTANT on the date and time specified in Invitation for Bids (IFB) / e-tender. Date & time for opening of price bids shall be advised later to only techno-commercially accepted bidders.

13.2 In case of e-tender, the bids shall be opened online and bidders shall be able to view details by logging in at their remote location. Physical presence of bidders at WorleyParsons/HPCL"s office is not required for witnessing bid opening.

**14.0 BID PRICES & BIDDING CURRENCY**

14.1 Domestic **(**Indian bidder) to submit their Prices in Indian Currency only. Payment shall be made in Indian Rupees Only.

14.2 Foreign bidder can submit their prices in INR/USD/ EURO/ GBP/JPY. Payment shall be made in the same currency.

**15.0 EVALUATION OF BIDS**

15.1 The Owner/Consultant will examine the bids to determine whether they are complete, whether any computational errors have been made, whether the documents have been properly digitally signed and whether the bids are generally in order.

15.2 The bids without requisite Bid Security and/or not in the prescribed proforma will not be considered and bids of such Bidder(s) shall be rejected at the sole discretion of Owner/Consultant.

15.3 Qualification of Bidder: The experience details and financial, technical & production capabilities of the Bidder(s) shall be examined to determine whether the Bidder(s) meet the Qualification Criteria mentioned in the INVITATION FOR BIDS (IFB). Bids that do not meet the qualification criteria mentioned in IFB shall be rejected.

15.4 Bidder may quote for one or more Schedule, but his offer shall be considered in accordance with Bidder Qualification Criteria.

15.5 Price bid evaluation of techno-commercially qualified bidders (as detailed under notes for clause No 3.1 and 3.2 of Bid qualification criteria) shall be carried out schedule-wise.

**For Example:**

1. If a bidder wants his bid to be considered for *any one of the schedules*, the bidder shall ensure that he furnishes price quote for all the items in all the schedules. Further, the bidder shall submit
   a) EMD value for that of Schedule 1 i.e INR 33.54 lakhs (for Domestic bidder) and USD 50192.79 (for Foreign bidders)
   b) BQC documentation indicating completed similar works as per clause 3.1.3 as applicable for Schedule 1 as below

| Domestic bidders (in INR Lakhs) | | | Foreign bidders ( in Million USD) | | |
|---|---|---|---|---|---|
| One Similar Order not less than | Two Similar Orders each not less than | Three Similar Orders each not less than | One Similar Order not less than | Two Similar Orders each not less than | Three Similar Orders each not less than |
| 1883.47 | 1177.17 | 941.73 | 2.82 | 1.76 | 1.41 |

   c) In case the bidder's offer is found techno-commercially acceptable, then his bid for Schedule 1 shall be opened. In case the offer is found to be lowest delivered (L1) in the schedule, his offers for other schedules shall not be opened. In case the bidder's offer is not found to be L1 in Schedule 1 then his offer for Schedule 2 shall be opened and evaluated. This process shall continue for subsequent schedules so long as the same is not found to be L1 in the previous schedule.

2. If a bidder wants his bid to be considered for *any combination of three schedules*, the bidder shall ensure that he furnishes price quote for all the items in all the schedules. Further, the bidder shall submit
   a) EMD value for that of Schedule 1+ Schedule 2 + Schedule 3 i.e INR 99.32 lakhs (for Domestic bidder) and USD 148,632.51 (for Foreign bidders)
   b) BQC documentation indicating completed similar works as per clause 3.1.3 as applicable for Schedule 1 + Schedule 2 + Schedule 3 as below

| Domestic bidders (in INR Lakhs) | | | Foreign bidders ( in Million USD) | | |
|---|---|---|---|---|---|
| One Similar Order not less than | Two Similar Orders each not less than | Three Similar Orders each not less than | One Similar Order not less than | Two Similar Orders each not less than | Three Similar Orders each not less than |
| 5546.37 | 3466.49 | 2773.19 | 8.3 | 5.18 | 4.15 |

   c) In case the bidder's offer is found techno-commercially acceptable, then his bid for Schedule 1, Schedule 2 & Schedule 3 shall be opened.
      i. In case the bidder's offer in any one of these schedules is not found to be lowest delivered (L1) in the schedule, his offer for Schedule 4 shall be considered for opening.
      ii. In case the bidder's offer in any two of these schedules is not found to be lowest delivered (L1) in those schedules, his offer for Schedule 4 and Schedule 5 shall be considered for opening.

15.6 After tender submission due date & time/ extended due date & time (as the case may be) the bidders shall not make any subsequent price changes/Changes on taxes quoted, whether resulting or arising out of any technical / commercial clarifications sought/allowed on any deviations or exceptions mentioned in the bid unless discussed and agreed by Owner/Consultant in writing. In case a bidder submits the bid without confirmation/compliance/acceptance to corrigendum's (issued before bid submission due date/extended due date), bidder shall not be

allowed to change the bid price /rates on account of compliance /acceptance/confirmation to such corrigendum.

15.7 To assist in the examination, evaluation and comparison of unpriced bids, the Owner/Owner's Consultant may, at its discretion, ask the Bidder clarifications on the bid. The request for such clarifications and the response thereto shall be in writing and shall be binding on the bidder.

15.8 Bidder(s) to note that Price changes against Technical/Commercial clarification, if any, in line with terms & conditions of enquiry documents are not allowed. In case, any bidder gives revised prices/price implications (including revision in taxes /duties & their applicability) against such clarification, it would amount to unsolicited post bid modification by the bidder and action shall be taken by the owner as per clause "**MODIFICATION AND WITHDRAWAL OF BIDS"** mentioned above. However, the Owner/Consultant reserves the right to seek cost implication/revised rates from all the vendors in case of a revision in technical specification/scope of job.

15.9 Prior to the evaluation and comparison of the bid, the Owner/ Owner's Consultant will determine the substantial responsiveness of each bid to the bidding documents. For the purpose of this Article, a substantially responsive bid is one, which conforms to all the terms and conditions of the bidding document without material deviations or reservations. The Owner's/Consultant's determination of a bid's responsiveness is to be based on the contents of the bid itself without recourse to the extrinsic evidence.

15.10 A bid determined as substantially non-responsive will be rejected by the Owner/Consultant and shall not subsequently be allowed by the Owner/Consultant to be made responsive by the Bidder by correction of the non-conformity.

15.11 Bidders are requested to accept tender terms/conditions in totality and should avoid deviations.

15.12 In case deviations to tender terms/conditions are unavoidable, the same should be mentioned in ONLINE DEVIATION SHEET. Deviations mentioned elsewhere shall not be considered by Owner/Consultant.

15.13 In Case, bidder is evaluated L1 bidder and has mentioned deviation to tender terms not in online deviation sheet, but elsewhere and is not withdrawing those deviations, Owner/Consultant shall reject his bid and forfeit the EMD/Bid security of the bidder in such cases.

15.14 No set off (including set off on account of taxes/duties) shall be considered in evaluation for deciding L1 bidder.

15.15 In case any deviation sought by bidder is accepted by Owner, Owner reserves the right to suitably load the bidder for evaluation purpose only**.**

15.16 Evaluation shall be carried out based on price quoted by bidder including stated taxes & duties as on date of opening of unpriced bid. For import content also, if any, no exchange rate variation / Customs duty variation shall be considered during evaluation.

15.17 **Bidder must quote the entire cell against each quoted line item. If no prices (free of cost) are envisaged for any of the entries, '0' shall be mentioned. In this context "0' mentioned against any item shall construe that the Bidder shall not charge any amount separately for that item from the Owner and shall execute the job as per the scope, terms and conditions of the tender.** If bidder quotes any Statutory Taxes and duties at a rate different from the present/ statutory rate, then the taxes and duties as quoted by the bidder shall be considered for evaluation; however payment shall be made as per the taxes & duties quoted by the bidder or payable as per statutes, whichever is less. Foreign exchange variation/import duty variations shall not be considered during evaluation in case of domestic bidder.

15.18 Non acceptance of commercial terms and conditions may result in rejection of bidder offer, or suitable commercial loading e.g. for non-acceptance of PRS clause, loading @ as defined for PRS shall be imposed. Deviations on payment terms shall be loaded with interest rate of SBI's Prime lending rate (PLR) + 1% prevailing on tender submission due date/extended due date(whichever is later).

15.19 Owner/Consultant reserves the right, at the time of award of contract, to increase or decrease in quantity(ies)of goods for any/all items as specified in the bid document without any change in the unit prices (as well as lump sum prices, if any) and other terms and conditions. Bidder's quoted prices shall be valid for such quantity variation.

**16.0 REJECTION CRITERIA**

16.1 Owner/ Consultant expect Bidder's compliance to requirement of Bidding Document without any deviation and submit substantially responsive bid.

16.2 Bids not compliance to requirement of Bidding Document shall be given once chance to withdraw their deviations/stipulations. Bids with the following deviation(s) to the bid conditions shall be considered as non-responsive and be rejected:

16.2.1 Bid Security

16.2.2 Tender Fee( if applicable)

16.2.3 Mention rates anywhere else in the tender other than online Price Bid

16.2.4 Security Deposit

16.2.5 Period of Validity of bids shorter than specified

16.2.6 Force Majeure

16.2.7 Defect Liability Period/Guarantee Period

16.2.8 Firm Prices

16.2.9 Workability Clause

16.2.10 Completion Period / Time Schedule

16.2.11 Price reduction for delay in delivery

16.2.12 Unsolicited Price change/implication (including revision in taxes / duties & their applicability) after bid submission due date / extended due date; however, any unilateral rebate shall be dealt as per clause no. 23 of ITB.

16.2.13 Integrity Pact

16.2.14 Non Submission of declaration of not banning / holiday listing/delisting from Government of India /ministries of Govt. of India / PSU

16.2.15 Non-conformance of scope of work /technical specifications

16.2.16 Performance Security (Contract Performance Bank Guarantee)

16.2.17 Guarantee/ Warranty Clause

16.2.18 Delivery at High Sea

16.3 Bids that do not meet the bidder qualification criteria as specified in the bid document shall be rejected.

16.4 A bid with incomplete scope of work and/or which does not meet the technical requirements as specified in the bid document shall be considered as non-responsive and rejected.

16.5 <u>Price must be furnished in the Price Schedule format available online in e-tender portal of HPCL and shall be strictly based on the terms specified under "Bid Prices" & "Taxes & Duties" specified in the bid document. Non-compliance of this requirement shall make the bid liable for rejection.</u>

16.6 Conditional bids will be liable for rejection.

16.7 Deleted

16.8 In case bidder is on the holiday list/Banned/Blacklisted/Delisted by any Government or quasi Government agency or PSU, his offer may be rejected at the sole discretion of Owner.

16.9 WRONG INFORMATION

If the Bidder deliberately gives wrong information in his Bid to create circumstances for the acceptance of his Bid, Owner reserves the right to reject his BID without any reference to the Bidder

## 17.0 COMPARISON OF BIDS

17.1 The Owners / Consultant will evaluate and compare bids previously determined to be substantially responsive pursuant to the provisions of the bidding document.

17.2 Conversion to Single Currency:

To facilitate evaluation & comparison, the Owner/Consultant shall convert all Bid prices of foreign Bidder's expressed in the amounts in various currencies in which Bid price is payable, to Indian Rupees at the Bill selling rates on the date of Bid opening (Bid due date), as available in State Bank of India, Mumbai (on the date of un-priced bid opening date). In case, exchange rate is not available in State Bank of India (Mumbai), alternative sources viz. Economics Times shall be considered for all the currencies.

17.3 Owner's Consultant/Owner's evaluation and comparison of prices of previously determined substantially responsive bids shall take following in account :-

17.3.1 FOR SCOPE OF SUPPLY Evaluated price shall be derived by taking the following into account:-

17.3.2 **In case of Domestic Bidder** the evaluated price shall include the following:-

i) FOT Dispatch Point Price including loading on to trailers / Trucks.

ii) All taxes / duties as applicable on finished goods as quoted by Bidder. CST without Form-'C' / VAT without any Concessional Form shall be considered for evaluation purpose.

i) Transportation of Mainline Centrifugal Pumps from manufacturer's work up to Project site Plus Service Tax, Krishi Kalyan Cess & Swachh Bharat Cess and Octroi/ Entry Tax as quoted by the Bidder. Cost of all related and applicable insurance pertaining to this activity to be included in this head.

ii) Charges towards supervision for Installation/ erection, pre-commissioning and commissioning as specified in Preamble of Price Schedule.

iii) Annual Maintenance Charges as specified in Preamble of Price Schedule.

iv) Loading on account of the technical parameters, as stipulated in SPC and Material Requisition.

17.3.3 In case of Foreign Bidder Supply of Mainline Centrifugal Pumps through Port of Landing at **Vizag** the evaluated price shall include the Following:-

i) FOB International Seaport of Shipment prices as quoted by the bidder.

ii) Ocean Freight charges as quoted by bidder

iii) Marine and inland insurance charges @ 0.1% of C&F Value.

iv) Port Levies/Port Handling & Transportation of Mainline Centrifugal Pumps from Port of Landing to project site including transit insurance etc. @ 3% of estimated CIF Value

v) Applicable Customs duties [considering applicable Merit rate of Customs duty prevailing on the date of priced bid opening or Customs duty as per CEPA, FTA, Multi-Lateral or Bi-lateral agreement etc., (if declared by bidder)] on estimated CIF value plus Landing Charges @ 1% of CIF Value.

vi) Letter of Credit (L/C) charges @ 0.75% of FOB prices + additional 0.15% of FOB value per quarter or part thereof for duration of delivery period.

vii) Charges towards supervision for Installation / erection, pre-commissioning and commissioning as specified in Preamble of Price Schedule

viii) Annual Maintenance Charges as specified in Preamble of Price Schedule.

ix) Loading on account of the technical parameters, as stipulated in SPC and Material Requisition.

## 18.0 CONTACTING THE OWNER/ OWNER'S CONSULTANT

18.1 From the time of the bid opening to the time of the Contract award, if any bidder wishes to contact the OWNER for any matter relating to the bid it should do so in writing.

18.2 Any efforts by a Bidder to influence the Owner's/ Owner's Consultant during bid evaluation, bid comparison or contract award decisions may result in the rejection of the Bidder's bid.

## 19.0 AWARD CRITERIA

19.1 Evaluation and comparison of bids shall be done to work out the ordering on Schedule-wise lowest delivered cost to Owner, utilizing maximum capacity taking following into consideration:

i. Evaluated Prices for all the Schedules.

ii. Price Preference to Indian Manufacturers.

iii. Purchase preference to Micro and Small Enterprise as per Public Procurement Policy of Govt. of India, 2012.

19.1.1 **Evaluated Prices for all items.**

Owner will award the job on Schedule-wise lowest delivered cost basis. However, if in the opinion of HPCL, the total price or certain item rates quoted by the lowest evaluated bidder are considered high, HPCL may invite such bidder for price negotiation. Lowest quoted bidder shall attend such negotiation meetings and if requested by HPCL, Bidder shall provide the analysis of rates/break-up of amount quoted by him for any or all items of Schedule of Rates/ Prices to demonstrate the reasonability. As a result of negotiation, bidder may offer rebate on his earlier quoted Price as per **clause 23 of ITB.**

19.1.2 **Price Preference to Indian Manufacturers**

Domestic manufacturers shall be accorded a price preference to offset Central Sales Tax to the extent of 4% or actuals, whichever is less. This dispensation would be subject to 30% of local content norm (required documentary evidence will be as decided by Owner).

The supplies of materials and equipment by Domestic bidders are eligible, as per Government directives to following preference:

| Extent of Domestic value added | Extent of price preference |
|---|---|
| Less than 30% | Nil |
| 30% and more | Domestic preference shall be limited to Off-setting of Central Sales Tax to the extent of 4% or actuals whichever is lower |

The domestic value addition shall be calculated with the following formula

% Value Addition=

Ex-Works price excluding Customs Duty, Excise Duty, Sales tax - CIF value of imports} x 100

---

Ex- Works price excluding Customs Duty, Excise Duty, Sales tax

In the above formula the customs duty shall be considered as applicable on imported raw materials/components and Excise Duty and Sales Tax shall be considered on finished goods.

Once quoted, the extent of Domestic Value addition shall remain unaltered. Bidder shall submit Chartered Accountant certificate in original, confirming that Domestic value addition is more than or equal to 30% as above for availing Domestic preference. The certificate has to be provided along with the bid document.

The evaluated price of all the domestic Bidders and the evaluated price of all the foreign Bidders as stated herein before shall be compared together to arrive at the lowest bid.

19.1.3 **Purchase preference to Micro and Small Enterprise as per Public Procurement Policy of Govt. of India,2012 shall be applicable as per Methodology as explained below:**

19.1.3.1 Participating Micro and Small Enterprises quoting price within price brand of L1+15% shall also be allowed to supply a portion of requirement by bringing down their prices to L1 price in a situation where L1 price is from someone other than a micro and small enterprises and such micro and small enterprises shall be allowed to supply up to 20% of the total tendered value. In case of more than one such Micro and Small Enterprises, the supply shall be shared proportionately (to tendered quantity).Further, out of above 20%, 4% (20% of 20%) shall be from MSEs owned by SC/ST entrepreneurs. This quota is to be transferred to other MSEs in case of non-availability of MSEs owned by SC/ST entrepreneurs.

19.1.3.2 The MSEs owned by SC/ ST entrepreneurs shall mean:

a. In case of Proprietary MSE, Proprietor(s) shall be SC/ ST.

b. In case of Partnership MSE, the SC/ST partners shall be holding at least 51% share in the unit.

a. In case of Private Limited Companies, at least 51% share is held by SC/ ST. If the MSE is owned by SC/ ST Entrepreneurs, the bidder shall furnish appropriate documentary evidence in this regard.

19.1.3.3 The quoted prices against various items shall remain valid in case of splitting of quantities of the items as above.

19.1.3.4 The owner reserves the right to allow Micro & Small enterprises as well as MSEs Owned by SC/ST entrepreneur, price preference as admissible under the prevailing procurement policy for MSEs.

The quantity against the item(s) of MR may be split to enable ordering of 20% quality against the item(s)of MR to MSEs, in line with price preference as admissible under the prevailing procurement policy for MSEs. Accordingly, the quoted prices against various items of MR shall remain valid in case of splitting of quantities of the items in view of the same. However, in case where quantity against a line item cannot be split (i.e. minimum 20% to MSEs) or items with single quantity or in group item, the complete line item/group shall be awarded on MSE bidder within the price range of L1 bidder's evaluated price+15% subject to their matching L1 bidder's price.

19.1.3.5 MSE bidder shall submit the following:

i. Documentary evidence that the bidder is a Micro or Small Enterprises registered with District Industries Centres or Khadi and Village Industries Commission or Khadi and Village Industries Board or Coir Board or national Small Industries Corporation or

Directorate of Handicrafts and Handloom or any other body specified by Ministry of Micro, Small and Medium Enterprises.

ii. If the MSE is owned by SC/ST Entrepreneurs, the bidder shall furnish appropriate documentary evidence in this regard.

If the bidder does not provide the appropriate document or any evidence to substantiate the above, the NIT will be presumed that he does not qualify for any preference admissible in the Public Procurement Policy, 2012.

19.2 Based on above, order shall be placed/work shall be awarded to one or more Bidders for Supply of Mainline Centrifugal Pumps along with Supervision. Order for AMC would be placed later by HPCL.

19.3 **Workability Clause**

Where the lowest bid is very low compared to the cost estimate and other higher bids, the Owner shall review the lowest offered bid for workability of rates and shall ascertain whether Bidder has properly quoted with reference to the scope. In such cases, Owner may require the lowest Bidder to produce detailed price analysis for any or all items to demonstrate the internal consistency of these prices. After evaluation of the price analysis, Owner may require that the amount of the performance security is increased to a level sufficient to protect the Owner against financial loss in the event of default of the successful Bidder under the order and same shall be provided by the bidder. Where based on workability assessment by authority (Owner/Consultant), the vendor's bid is found non-workable, the same will be rejected and EMD, if any, forfeited.

19.4 In case of a bid by incorporated JV and such JV happens to be a successful bidder, the purchase order shall be placed in the name of incorporated JV and payment shall be made in the name of incorporated JV.

19.5 In case of a bid submitted by unincorporated JV/consortium and such unincorporated JV happens to be successful bidder, the purchase order shall be placed in the name of unincorporated JV and the payment shall be released in the name of unincorporated JV.

## 20.0 OWNER'S RIGHT TO ACCEPT ANY BID AND TO REJECT ANY OR ALL BIDS

20.1 Owner reserves the right to accept or reject any bid, and to annul the bidding process and reject all bids, at any time prior to award of contract, without thereby incurring any liability to the affected Bidder or Bidders or; any obligations to inform the affected Bidder or Bidders of the ground for the Owner's action.

20.2 The submission of any bid connected with these documents and specifications shall constitute an agreement that the Bidder shall have no cause for action or claim, against the Owner for rejection of his bid. The Owner shall always be at liberty to reject or accept any bid or bids at his sole discretion and any such action will not be called into question and the Bidder shall have no claim in that regard against the Owner.

## 21.0 NOTIFICATION OF AWARD

21.1 Prior to the expiration of period of bid validity, the Owner will notify the successful Bidder in writing or by fax to be confirmed in writing, that his bid has been accepted. The Notification of Award will constitute the formation of the Contract.

21.2 Delivery Period shall be counted from the date of notification of award (Letter of Acceptance/ Letter of Award).

## 22.0 ISSUE OF PURCHASE ORDER

22.1 After the successful Bidder/Bidders ( as per awards criterion) has been notified that his bid has been accepted, the Owner will send to such Bidder a detailed Purchase Order incorporating all the terms and conditions of the tender and deviation to tender terms if any ,permitted by Owner.

22.2 Within 15 days of receipt of the detailed Purchase Order, the Bidder shall sign and return it to the Owner, in token of acceptance of the Order. Failure on partof bidder in doing so may result in cancellation of Purchase order and further action by OWNER in line with tender terms including forfeiture of EMD/Bid security at the sole discretion of OWNER.

**23.0 REBATE**

23.1 If a bidder offers a rebate unilaterally after the closing date and time of the bid, it will not be taken into account for evaluating purposes, but if that bidder emerges as the lowest evaluated, the rebate offered will be taken into account and shall be binding on the bidder for award of work.

23.2 If a contractor submits his bid, qualifies and does not get the order because of his being not the lowest, he will be prohibited from working as a subcontractor for the contractor who is executing the order.

**24.0 FRADULENT PRACTICES**

24.1 The OWNER/CONSULTANT require that Bidder/Vendor/ Contractor observe the highest standard of ethics during the award/execution of Contract. “Fraudulent Practice” means a misrepresentation of facts in order to influence the award of a Contract to the detriment of the OWNER/CONSULTANT and includes collusive practice among bidders ( prior to or after bid submission ) designed to establish bid prices at artificial non-competitive levels and to deprive the OWNER of the benefits of free and open competition.

24.2 The OWNER/CONSULTANT will reject a bid for award if it determines that the bidder recommended for award has engaged in fraudulent practices in competing for the Contract in question.

24.3 Bidder is required to furnish the complete and correct information/ documents required for evaluation of their bids, if the information/ documents forming basis of evaluation is found to be false/ forged, the same shall be considered adequate ground for rejection of bids.

24.4 In case, the information/ document furnished by the Bidder/vendor/Contractor forming basis of evaluation of his bid is found to be false/ forged after the award of the contract, OWNER shall have full right to terminate the contract and get the remaining job executed at the risk & cost of such Bidder/Vendor/ Contractor without any prejudice to other rights available to OWNER under the contract such as forfeiture of CPBG/Security Deposit, withholding of payment etc.

24.5 In case, this issue of submission of false document comes to the notice after execution of work, OWNER shall have full right to forfeit any amount due to the Bidder/Vendor/Contractor along with forfeiture of CPBG/Security Deposit furnished by the Bidder/Vendor/Contractor.

Further, such Bidder/Vendor/ Contractor shall be put on Blacklist /Holiday/ Negative List of OWNER debarring them from future business with OWNER and WORLEYPARSONS for a time period, as per the prevailing policy of OWNER and WORLEYPARSONS.

**25.0 QUOTED PRICES - PRICE SHALL BE QUOTED CONSIDERING THE FOLLOWING:**

The bidder shall quote the prices for items in the Schedule of Rates after careful analysis of cost involved for the performance of complete work considering all parts of the bidding documents. In case, any activity though specifically not covered but is required to complete the work as per scope of work, scope of supply, specifications, standards, drawings, GPC, SPC or any other part of bidding document, the prices quoted shall deemed to be inclusive of cost incurred for such activity.

# E-TENDER INSTRUCTIONS

**1.0** **This is only an e-Tender Enquiry and not an order.** HPCL reserves the right to cancel it at any stage without assigning a reason.

**2.0** **Void**

**3.0** The tender should be submitted online at website https://etender.hpcl.co.in only, by the due date and time, as specified in the tender. Late / delayed tenders submitted on line after the due date and time, for whatsoever reasons will not be considered. The Server Date & Time as appearing on the HPCL website (https://etender.hpcl.co.in) shall only be considered for the cut-off date and time for receipt of tenders. Offers sent through post, telegram, fax, telex, e-mail, courier will not be considered.

**4.0** All communication regarding the tender including queries, if any, and submission of offers shall be done online within the e-Procurement system at website https://etender.hpcl.co.in

**5.0** Two Bid System Bidders are required to submit offer in Two parts, namely "Unpriced (Technical Bid)" & "Priced (Priced Bid)". The Bidder may modify or withdraw his online bid after the bid's submission on line *but* prior to the bid due date & time.

**6.0** **Void**

**7.0** Bidders shall be required to arrange all resources, including Digital Certificate and Internet Connections at their own cost, for participating in online tenders at HPCL e Procurement site https://etender.hpcl.co.in. For submitting on line response Digital Certificate / Signatures (Class II/ Class III) shall be mandatory. In case, you are logging in for the first time please ensure to upload your Digital certificate. The process for same is listed in the Help link after logging in.

**8.0** ***PLEASE LOGIN WITH YOUR EIGHT DIGIT JDE (HPCL) VENDOR CODE AND CORRESPONDING BILL TRACKING SYSTEM (BTS) PASSWORD TO BID FOR THE TENDER (in case, you do not have EIGHT DIGIT JDE (HPCL) VENDOR CODE , Please contact E proc helpdesk at:022-42100111 on any day between 10.00 AM to 6.00 PM except on Sundays/Public holidays). Alternatively for public tenders vendor can create temporary login on his own. In case vendor login is not enabled with above help, vendor may contact at 011-22408444/405. In case of any difficulty in logging or in case you do not have the BTS password, please contact (E proc helpdesk at: 022-42100111 on any day between 10.00AM to 6.00PM except on Sundays /Public holidays.) Please refer to help link after logging in, in case you are new to e-Tender.***

**9.0** HPCL shall not be responsible for any delays reasons whatsoever in receiving as well as submitting offers, including connectivity issues. HPCL shall not be responsible for any postal or other delays in submitting EMD / tender cost wherever applicable.

**10.0** HPCL will not be responsible for the cost incurred in preparation and submission of bids including the cost of digital certificate, regardless of the conduct of outcome of the biding process.

**11.0** Void

**12.0** ***Bidders are requested to quote unit rates (per unit quantity) in the on-line price bid only.***

**13.0** Please do not quote / mention rates anywhere else in the tender other than online price bid. In case bidders quote rates at any other place (other than online price bid), THE OFFER OF PARTY SHALL BE REJECTED.

**14.0** Bidders should only quote unit basic rate in the online priced bid format. However, all taxes and duties as applicable for the tender shall be quoted in the tax section online by the bidders. In case bidders do not quote any tax component/charges or mention the same as "0", in online Tax sheet/section, it will be considered that all the taxes/charges are included in rates quoted by the bidder and the same shall be binding to the bidder.

**15.0** Request for extension of tender submission due date, if any, shall be considered at the sole

discretion of HPCL however, request for extension received within **two** (2) days for limited tenders / three (3) days for public tender of tender submission due date /time **shall not be considered.**

**16.0** The HPCL may, at its discretion, on giving reasonable notice online to extend the bid due date, in which case all rights and obligations of the HPCL and the Bidders, previously subject to the bid due date, shall thereafter be subject to the new bid due date as extended.

**17.0** ***Please note that queries related to scope of job, tender specifications, terms & conditions etc. should be submitted on–line only (by logging in at https://etender.hpcl.co.in) by the query end date / time specified in the online tender . The reply of queries sent by bidders/ messages issued by HPCL pertaining to tender shall be available on tender message board. HPCL, at its sole discretion, may not entertain the queries sent by post / fax/ e-mail or through any other mode of communication.***

**18.0** **BID CLARIFICATIONS/AMENDMENTS BY HPCL:** HPCL may issue clarifications / amendments in the form of online **addendum / corrigendum** and on **Message Board** at https://etender.hpcl.co.in during the bidding period and may also issue amendments subsequent to receiving the bids. Bidders shall consider the addendum/corrigendum/Messages on Message Board while quoting for the tender. Bidders shall examine the Bidding Document thoroughly and submit to HPCL / HPCL any apparent conflict, discrepancy or error. HPCL / HPCL shall issue appropriate clarifications or amendments, if required. Any failure by Bidder to comply with the aforesaid shall not excuse the Bidder from performing the Services in accordance with the contract if subsequently awarded.

**19.0** Void

**20.0** Void

**21.0** In case any deviation sought by bidder is accepted by HPCL, HPCL reserves the right to suitably load the bidder for evaluation purpose only.

**22.0** ***DEVIATIONS TO TENDER TERMS:***

**1.0** Bidders are requested to accept tender terms/conditions in totality and should avoid deviations.

**2.0** In case deviations to tender terms/conditions are unavoidable, the same should be mentioned in ONLINE DEVIATION SHEET. Deviations mentioned elsewhere shall not be considered by HPCL.

**3.0** In case, bidder is evaluated L1 bidder and has mentioned deviation to tender terms not in online deviation sheet , but elsewhere and is not withdrawing those deviations, HPCL may forfeit the EMD (IF APPLICABLE) of the bidder in such cases.

**4.0** ***No new deviation will be received/ accepted from bidder after bid due date. Incase bidder submits new deviation, his bid will be rejected. At the sole discretion of the HPCL bidder may be given opportunity to withdraw the deviation and in case the same is not withdrawn by the bidder, the offer of the bidder shall be rejected & EMD/ bid security (if applicable) submitted by the bidder shall be forfeited.***

**23.0** Void

**24.0** ***Bidder submission file size limit is 40 MB. However, bidders must attempt to submit bids only in non-peak hours as there could be chances of packet droppings in peak hour. Further, bidders must be educated on efficient scanning techniques at lower dpi so that more no of pages can be scanned by them within lesser file size limits. Lower file size would also mean, easier submission of bid documents by the vendor.***

# Chapter 3

SPECIAL CONDITIONS OF PURCHASE

## SPECIAL CONDITIONS OF PURCHASE (SPC)

## INDEX

**SR. NO. DESCRIPTION**


1. GENERAL
2. DEFINITIONS / NOTES
3. SCOPE OF WORK
4. BID PRICES
5. TAXES, DUTIES AND LEVIES ON MATERIALS /SERVICES AND FOREIGN EXCHANGE VARIATION BID SECURITY
6. TRAINING
7. ANNUAL MAINTENANCE CHARGES
8. BID SECURITY
9. CONTRACT PERFORMANCE BANK
10. PRICE REDUCTION FOR DELAY IN DELIVERY
11. INSURANCE
12. PAYMENT TERMS
13. TERMS & CONDITIONS FOR SUPERVISION OF ERECTION TESTING & COMMISSIOING
14. LIMITATION OF LIABILITIES
15. LIABILITY CLAUSE
16. DEFECTS AFTER TAKING OVER OR TERMINATION OF WORK CONTRACT BY OWNER
17. TERMINATION OF CONTRACT
18. ARBITRATION
19. LOADING AND PENALTY CLAUSE
20. GRIEVANCE REDRESSAL
21. SUB-CONTRACTING
22. JURISDICTION
23. INTEGRITY PACT
24. UNLOADING
25. MAKE OF MATERIAL
26. ANNEXURE -1: LIST OF OUR APPROVED MAKES / SUB-VENDORS

## 1.0 GENERAL

1.1 Special Purchase Conditions(SPC) shall be read in conjunction with the General Terms & Conditions for Supply (also referred as General Terms & Conditions hereinafter) , Schedule of Rates, specifications of work, drawings and any other document forming part of this Contract wherever the context so requires.

1.2 Notwithstanding the sub-division of the document into these separate Chapter and volumes, every part of each shall be deemed to be supplementary of every other part and shall be read with and into the Contract so far as it may be practicable to do so.

1.3 Where any portion of the General Terms & Conditions for is repugnant to or at variance with any provisions of the Special Purchase Conditions, then unless a different intention appears, the provision(s) of the Special Purchase Conditions shall be deemed to override the provision(s) of General Terms & Conditions for Supply/ General Terms & Conditions of Work Contract only to the extent that such repugnancies or variations in the Special Purchase Conditions are not possible of being reconciled with the provisions of General Terms & Conditions for Supply/ General Terms & Conditions of Work Contract.

1.4 Wherever it is stated in this Bidding Document that such and such a supply is to be affected or such and such a work is to be carried out, it shall be understood that the same shall be affected and/or carried out by the CONTRACTOR at his own cost, unless a different intention is specifically and expressly stated herein or otherwise explicit from the context. Contract Price shall be deemed to have included such cost.

1.5 The materials, design & workmanship shall satisfy the applicable relevant International / Indian Standards, the job specifications contained herein & codes referred to. Where the job specifications stipulate requirements in addition to those contained in the standard codes and specifications, these additional requirements shall also be satisfied. In the absence of any Standard / Specifications / Codes of practice for detailed specifications covering any part of the work covered in this bidding document, the instructions / directions of HPCL /Consultant will be binding upon the CONTRACTOR.

1.6 In case of contradiction between relevant International / Indian standards, General Terms & Conditions for Supply, Special Purchase Conditions, Specifications, Drawings and Price Schedule / Schedule of Rates, the following shall prevail in order of precedence.

a. Detailed Order along with Statement of Agreed Variations, if any, and its enclosures.
b. Letter of Acceptance (LOA)
c. Price Schedule / Schedule of Rates with Quantities.
d. Scope of Work
e. Technical Specifications
f. Drawings
g. Special Purchase Conditions (SPC) / Agreed Terms and Conditions(A.T.C.)
h. Instructions to Bidders (ITB) / Invitation for Bids (IFB)
i. General Terms & Conditions for Supply/
j. Relevant Indian / International Standards/ Specifications.

## 2.0 DEFINITIONS / NOTES

i. The terms 'Bidder', 'Contractor', `Seller', `Supplier' or 'Vendor' stated anywhere in the Bid Document carry the same meaning.

ii. The terms `Client', 'Owner', 'Purchaser' stated anywhere in the Bid Document refer to Hindustan Petroleum Corporation Limited (HPCL).

iii. The term `Consultant' shall mean WorleyParsons India Pvt. Limited.

iv. The term 'Contract', 'Order' or 'Purchase Order' stated anywhere in the Bid Document carry the same meaning.

v. The term 'MR means 'Material Requisition' containing technical requirements and scope of work (technical), 'GPC means General Purchase Conditions' containing commercial terms & conditions, 'PR means Purchase Requisition' issued after award of contract incorporating agreed deviations in MR,' Instructions to Bidders (ITB)', 'ATC means Agreed Terms & Conditions' , 'IFB means Invitation For Bids / e-tender'.

vi. In the event of any contradictions between these Instructions to Bidders/Special Conditions of Purchase and other Chapters of Bid Document, the terms specified under this Chapter shall prevail.

vii. For the purpose of contract, the trade terms FOB, CFR and C&F shall have the meanings as assigned to them by INCOTERMS 2000 published by ICC, Paris.

viii. Any reference to the Govt. Acts / Regulations etc. in the Bid Document is only indicative, and it is entirely for the Bidder to ascertain the applicable Acts/Regulations.

ix. Port of Entry (Landing) will be "Vizag Port".

## 3.0 SCOPE OF WORK / SUPPLY

The scope of work covered in this Contract will be as described in Particular job specifications, Technical specifications, Standard Specifications, Schedule of Rates etc. The scope of supply covered in this Contract will be as described in Particular Job Specifications, Technical Specifications, Standard Specifications, Schedule of Rates etc. It is however, explicitly understood that scope described is not limiting, in so far as the responsibilities of the contractor are concerned and shall include, inter alia, carrying out any and all works and providing any and all facilities as are required to complete the works in all respect.

## 4.0 BID PRICES

4.1 Price must be furnished in the Price Schedule format available online in e-tender portal of HPCL. Quoted prices must be net of discount, if any. Conditional discounts, if offered by a bidder, shall not be considered for evaluation.

4.2 Quoted prices shall be inclusive of all testing and inspection requirements (including stage wise and final inspection by Owner/ Owner's Consultant for which no extra charges shall be paid) as specified in the bid document. However, Personal and incidental expenses of Owner's / Owner's Consultant's inspectors are not in vendor's scope.

4.3 Bidder's quoted prices shall be deemed to include entire scope of work and all obligations and responsibilities to be carried out/ executed by the Bidder as per terms of bid document. The quoted base price shall be inclusive of Mandatory Spares, Pre-Commissioning & Commissioning Spares, Special Tools & Tackles for Mainline Centrifugal Pump package as per MR.

4.4 It shall be the responsibility of the Bidder to duly enquire of their own and comply with all applicable laws, rules, regulations, orders and formalities applicable to Service Tax and Swachh Bharat Cess, Krishi Kalyan Cess, Excise Duty, Customs Duty, Countervailing Duty etc. on the manufacture, sale and/or supply of any material / services to Owner / Consultant. The Bidder shall keep the Owner / Consultant indemnified from and against any and all claims, demands, prosecutions, penalties, damages, demurrages and/or other levies whatsoever made or levied by any Court, Tribunal or the Customs or other Authorities with respect to any alleged breach, evasion or infraction of such duties, taxes, charges or levies or any breach or infraction of such laws, rules, regulations, orders or formalities concerning the same and from the consequence thereof.

4.5 Price quoted by the bidder, shall remain **Firm & Fixed** until complete execution of the Purchase Order and shall not be subject to any variation, except statutory variation in taxes, duties & levies pursuant to relevant provisions in Special Purchase Conditions. The Bidder's quoted price shall also remain Firm and Fixed on account of Foreign Exchange (FE) Variation, unless otherwise any specific provision is indicated in IFB document.

4.6 The bidder shall quote the prices after careful analysis of cost involved for the performance of complete work considering all parts of the RFQ documents. In case, any activity though specifically not covered but is required to complete the work as per scope of work, scope of supply, specifications, standards, drawings, GPC, SPC or any other part of IFB Document, the prices quoted shall deemed to be inclusive of cost incurred for such activity(ies).

4.7 **Domestic bidder** to consider **Merit rate of custom duty** for their import content. Bidder shall ascertain the applicable merit rate of customs duty and shall be solely responsible towards applicability and correctness of such rates. The evaluation and ordering shall be carried out based on the merit rates of customs duty considered by the bidder. The bidder(s) must indicate quantity, CIF value & rate of custom duty considered in the Price Schedule.

If bidder has considered Customs Duty for import contents other than the Merit Rate of Customs Duty in their offer, then statutory variation on the Customs Duty will be payable extra on the Merit Rate of Custom Duty or the rate of Custom Duty considered by the bidder, whichever is lower.

4.8 Bidder to note and consider the following:

a) Owner will not issue any concessional form for Andhra Pradesh VAT (APVAT).
b) Owner will issue Road Permit for materials directly consigned to them.

4.9 **Indian Bidders shall quote their prices in Indian Rupees only indicate the following in their offer:**

4.9.1 **FOT dispatch point price** of item including packing & forwarding, (such price to include fabrication /manufacturing of item, all costs as well as duties and taxes paid or payable on components and raw materials incorporated or to be incorporated in the goods, inspection, testing etc.) but excluding applicable taxes and duties on finished goods.

4.9.2 **Excise Duty** (including Cess) **and CST** (without concessional form) **or APVAT** (without concessional form) which will be applicable on the finished goods

4.9.3 **Tansportation Charges** (as per Price Schedule) upto respective project site exclusive of Service Tax and swachh bharat cess, krishi kalyan cess. **Transit Insurance and Road Permit to be arranged by Owner**. In case, a bidder dose not quote for transportation charges, the bidder shall be required to absorb the same in their quoted price. Non- compliance shall result in rejection of the bid.

4.9.4 **Site work Prices**, if applicable as per MR for the scope of work mentioned in MR / IFB documents, shall be exclusive of Service Tax, Swachh bharat cess, Krishi kalyan cess & inclusive of VAT on Work Contracts. All necessary taxes & duties and registration, if required, for carrying out the site activities shall be done by the bidder and cost towards the same shall be included in quoted site work prices.

4.9.5 **Per-diem supervision charges**, if applicable as per MR, shall be exclusive of Service Tax and swachh bharat cess & Krishi Kalyan Cess. In case a bidder does not quote for supervision charges, the bidder shall be required to absorb the same in their quoted price. Non-compliance shall result in rejection of the bid

4.9.6 **Per-diem Training charges**, if applicable as per MR, shall be exclusive of Service Tax and swachh bharat cess & Krishi Kalyan Cess. In case a bidder does not quote for supervision charges, the bidder shall be required to absorb the same in their quoted price. Non-compliance shall result in rejection of the bid

4.9.7 Prices for **AMC** (if applicable as per MR) exclusive of Service Tax and Swachh bharat cess & Krishi Kalyan Cess.

4.9.8 **Service Tax**, Swachh bharat cess and Krishi Kalyan Cess **payable extra** on Services i.e. Inland Transportation/ Supervision/ Site Work/ Training/ AMC, as applicable.

4.9.9 Bidder shall indicate the following separately:

4.9.9.1 **CIF value of import** for raw material and components incorporated or to be incorporated in the goods and included in quoted price. The bidder shall provide description of such material, quantity, rate, value etc.

4.9.9.2 **Merit rate of Import Duties** (rate) considered on above CIF value of import for raw material and components and included in the quoted prices.

4.9.9.3 If bidder does not furnish built-in CIF value and confirms that quoted prices are firm and fixed, in that case bidder shall not be entitled to claim any variation in the Import Duties even if bidder has quoted their prices considering Import Duties.

4.10 **Foreign Bidders shall indicate the following in their offer:**

4.10.1 Bidders shall submit their **prices on FOB – International Port of Exit basis** and also quote for **Ocean Freight charges upto the port of entry- Vizag, India** in the price Schedule. **In case, bidder does not quote for ocean freight charges, the bidder shall be required to absorb the same in their quoted price. Non- compliance shall result in rejection of the bid**.

4.10.2 The request for separate FOB Price and Ocean Freight is merely to facilitate the comparison of bids and will not in any way limit Owner's right to order on different terms. Ocean Freight Charges shall be quoted separately considering Purchaser's right for ordering on different terms.

4.10.3 **Purchaser reserves the right to place the order on any of the specified price basis (FOB or CFR).** In case of award, initially the Letter of Acceptance (LOA) shall be placed on **FOB – International Port of Exit basis** and Purchaser reserves the right to convert the same to CFR basis at a later date.

Therefore, bidder's quoted ocean freight charges should be valid for the entire duration as indicated in the Purchase Order.

4.10.4 The seller shall not be allowed to change port of shipment after quoting their price unless the bidder confirms in writing to absorb any additional cost in their ordered price on account of change in port of shipment.

4.10.5 FOB Prices quoted shall be inclusive of all applicable **taxes, packing & forwarding** etc. as applicable as per IFB document, up to FOB –International Port of Exit.

4.10.6 **Site work Prices**, if applicable as per the scope of work mentioned in Material Requisition (MR) / RFQ documents **exclusive of Service Tax,** Swachh Bharat Cess, Krishi Kalyan Cess **& inclusive of VAT on Work Contracts**. All necessary taxes & duties registration, if required for carrying out the site activities shall be carried out by the supplier and cost towards the same shall be included in quoted site work prices.

4.10.7 **Per diem Supervision & Training Charges** (if applicable as per MR) exclusive of Service Tax and Swachh bharat cess & Krishi Kalyan Cess.

4.10.8 **Prices for AMC** (if applicable as per MR) exclusive of Service Tax, Swachh bharat cess & Krishi Kalyan Cess.

4.10.9 **Service Tax,** Swachh Bharat Cess and Krishi Kalyan Cess **payable extra on Services** at Project Site i.e. Supervision/ Site Work/ Training/ AMC etc., as applicable.

4.10.10 In case, any of the foreign bidders render any services in India against the purchase order, the payment shall be subject to tax deduction of Income Tax/Withholding Tax at source in India. The quoted prices must be **gross of Indian income tax** and bidder shall furnish all requisite information stipulated elsewhere in this Special Purchase Conditions (SPC).

4.10.11 All shipments of containerized cargo shall be made by suitable vessels certified for sea worthiness and complying with National / International safety regulations and age of the vessel being less than 25 years. Quoted Ocean freight charges for containerized cargo delivery shall be on FLT (Full Liner Terms), i.e., all charges at destination port shall be borne by the bidder till the cargo is unloaded on to the wharf /vehicle as the case may be. No Trans-shipment is permitted for containerized cargo.

4.10.12 Bidder shall inform 07 (Seven) days prior to the expected date of arrival of vessel in port of entry in India. Detention & Demurrages, if any, due to early arrival of vessel, shall be to bidder's account.

4.10.13 In case of FOB Contracts, the shipping arrangements shall be made through the nominated agents of Ministry of Surface Transport (Govt. of India) in accordance with clause 18.0 of enclosed "General Purchase Conditions for Imports".

4.10.14 However, in case of CFR Contracts, no such restriction for shipment shall apply and arrangements for shipment can be made through any reputed shipping company by first class direct vessels approved by Lloyds or any other such Agency applicable in the country of shipment.

4.10.15 All shipments shall be under deck only.

4.10.16 Bidder to note that Special Packaging Requirements as per Annexure-I, enclosed shall be complied.

## 5.0 TAXES, DUTIES AND LEVIES ON MATERIALS /SERVICES AND FOREIGN EXCHANGE VARIATION :

5.1 Domestic (Indian Bidders):

5.1.1 Domestic Bidder's quoted prices shall be inclusive of all taxes, duties, cess, levies etc., paid or payable on the raw material/components incorporated or to be incorporated in the offered finished goods, packing and forwarding charges, but excluding applicable taxes and duties on finished goods.

5.1.1.1 Bidder shall furnish the present rate(s) of Excise Duty, Education Cess and sales tax / VAT (without Concessional Form applicable and payable on quoted finished goods. Owner may decide to place order without concessional form based on the availability of such Form. The Excise duty amount shall be reimbursed to seller only against receipt of Cenvatable copy of Excise Invoice.

5.1.1.2 The statutory variation in Excise duty, Education Cess and Sales tax / VAT and introduction of new tax on finished goods, from bid due date till the contractual completion period shall be to Purchaser's account against submission of the documentary evidence. However, any increase in the rate of these taxes and duties beyond the contractual delivery period shall be to Seller's account. Any decrease in the rate of these taxes and duties shall be passed on to the Purchaser even after contractual delivery period.

5.1.1.3 It is for the Bidder to assess and ascertain the rate of Excise duty, Education Cess and Sales tax/VAT applicable on quoted items. It is clearly understood that Owner will not have any

additional liability towards payment of Excise Duty, Education Cess and Sales Tax/VAT which is based on Bidder's wrong assessment / interpretation of applicability of such Excise Duty and/or education cess and / or Sales Tax/VAT.

5.1.1.4 Entry tax and Octroi if applicable will be first paid by vendor to authorities and same will be reimbursed to vendor on production of proof of payment against documentary evidence.

5.2 Foreign Bidders:

5.2.1 Foreign Bidders prices shall include all taxes, duties, levies and any other charge including export licensing, if any, upto the FOB international Port of Shipment.

5.3 Income Tax / Corporate Tax:

5.3.1 Income Tax deductions shall be made from all payments made to the Contractor as per the rules and regulations in force in accordance with the Income Tax Act prevailing from time to time.

5.3.2 Corporate Tax Liability if any shall be to Contractor's account.

5.3.3 As regards Income Tax, Surcharge on Income Tax or any other Corporate Tax payable by the Bidder for reason of the contract awarded, and / or on their expatriate personal, the Owner shall not bear any Tax liability whatsoever, irrespective of the mode of construction of contract / order. The Bidder shall be liable and responsible for payment of such tax, if attracted under the provision of Indian Income Tax Act.

5.3.4 Bidder may note that if any tax is deductible at source as per Indian Income Tax Law, the same will be so deducted before releasing any payment to the Bidder and a TDS (Tax deducted at source) certificate will be furnished to the Bidder. Accordingly, Bidder shall have the responsibility to check and include such provision of taxes in the prices.

5.3.5 In case of delay in delivery due to reasons attributable to Bidder, any new or additional taxes or duties levied by Statutory authorities during this period shall be borne by the Bidder.

5.3.6 The contractor shall provide accurate particulars of PAN number as required, under Section 206AA of Income Tax Act 1961. In case of non-residents not having Permanent Account Number (PAN) the provisions of section 206AA shall not apply if the non-resident furnishes the following information/ documents:

a. Name, e-mail id, contact number;
b. Address in the country of which the deductee is a resident
c. Tax Residency Certificate (TRC) from the Government of that country
d. Tax identification number / unique number of the deductee in the country of his residence.

5.3.7 The contractors having their ‘tax residency status’ outside India shall provide Tax Residency Certificate (TRC), issued by Government of the Country or the specified territory where the Contractor is a Resident. Rule 21AB of the Income Tax Rules, 1962 has prescribed the contents of a TRC. This would enable the Owner to deduct tax at source by duly considering the ‘treaty relief’, if any, under Double Taxation Avoidance Agreement (DTAA) entered into between GOI and the respective country/specified.

5.4 In partial modifications of the terms specified in Clause no. 23 of GCP-Indigenous & Clause No 2 of GCP-Imports :-

5.4.1 Excise Duty, Central Sales Tax, VAT, Service Tax etc. as applicable shall be reimbursed for the materials consigned to Corporation as per limits indicated in the offer against documentary evidence to be furnished by the Supplier. Corporation shall pay only those taxes, duties and levies as indicated by Supplier at the time of bid submission/as agreed subsequently (prior to opening of priced bids). The tender shall be evaluated as per the taxes & duties quoted by the bidder, however payment shall be made as per the taxes & duties quoted by the bidder or payable as per statutes, whichever is less. Taxes / Duties and/or Levies not indicated by supplier in Bid, but payable, shall be to Supplier’s account. Owner shall make from Contractor's bills such tax deductions as are required as per rules and regulations in force from time to time.

5.4.2 The contractor shall correctly ascertain all applicable taxes & duties (including Octroi / entry tax,

if applicable) and quote rates accordingly. Owner will not have any additional liability towards payment of taxes & duties which is based on Bidder's wrong assessment / interpretation of applicability. Irrespective of taxes/duties quoted by bidder/ contractor in the tender, he shall be fully & exclusively responsible for the payment of any and all taxes, duties, octroi, rates, cess, levies, including taxes applicable based on location of site and statutory payments payable under all or any of the statutes etc. The bidder shall keep HPCL indemnified from any demand from statutory/ local bodies on this account and any liability including statutory liability arising in future shall be borne & paid by the bidder.

5.4.3 **The HPCL will not issue any concessional form for CST/ LST/VAT**. Bidders are required to provide CENVATABLE invoices with respect to Excise Duty, VAT, and Service Tax [including Swachh Bharat Cess and Krishi Kalyan Cess] in all applicable which shall be raised as per the details provided in detailed Letter of Acceptance.(LOA)

5.4.4 The bidder is required to check the applicability of Customs duty, CVD, ACD etc. for imports at the prevailing rates at the time of bid.

5.4.5 The bidder while quoting the price must consider the merit rate of custom duty. However, in case bidder is allowed, vide any other notification, a lower rate of custom duty than merit rate of customs duty for import of raw materials and components, in such case bidder may consider the same and quote accordingly. Bidder shall ascertain the applicable rate of customs duty and shall be solely responsible towards applicability and correctness of such rates. The evaluation and ordering shall be carried out based on the rates of customs duty considered by the bidder. However, in case of wrong classification, no variation including statutory variation of Customs Duty will be payable extra. The bidder(s) must indicate quantity, CIF value [in terms of % basic quoted price] & rate of custom duty considered in the Price Schedule. If Bidder has considered Customs duty for import content other than the merit rate of Customs duty in their offer, then statutory variation on Customs duty, shall be payable extra on the merit rate of Customs duty or the rate of Customs duty considered by the Bidder, whichever is lower.

5.4.6 **FOREIGN EXCHANGE VARIATION**

5.5 Following has been appended in Clause no. 25 of GCP-Indigenous & Clause No 2 of GCP-Imports :-

5.5.1.1 Any foreign exchange rate variation on the actual CIF value of import content after bid due date and till Contractual delivery period but subject to the maximum of such variation payable on quoted CIF value shall be to Owner's account. For the purpose of foreign exchange variation exchange rate based on Bill Selling rate of SBI shall be considered.

5.5.1.2 Bidder shall consider the exchange rate (Bill selling rate of SBI) prevailing on bid due date for conversion of built-in CIF import content in their quoted prices.

5.5.1.3 Foreign Exchange rate variation on CIF content as referred above shall be payable on documentary evidence like Bill of Entry, Bank advice etc. Or any other document as sought by HPCL shall be submitted by the bidder along with each invoice for such adjustment.

5.6 **Statutory Variations in taxes, duties & levies**

5.6.1 In the event of any Change in Tax Law (as defined below), which results in increased cost of supply and services under the Contract through increased liability of Taxes, the seller shall be covered for any such increased cost by the Owner subject to the production of documentary proof to the satisfaction of the Owner to the extent which is attributable to such change or amendment as mentioned above within the Contractual Delivery Date. However, in case of delay in delivery beyond the contractual delivery date, for reasons attributable to seller, any increase in taxes shall be borne by seller. Any decrease in Taxes shall be passed on to the Owner.

5.6.2 Further variation in taxes and duties (both nature and quantum) shall be applicable only on the taxes and duties indicated in the Price Bid. The statutory increase in taxes (in case where quoted taxes are less than the taxes/ duties payable as per the statute) shall be payable only to the extent of taxes quoted by the vendor plus statutory increase in the taxes.

5.6.3 The statutory variation in Customs duty, based on CIF value of import content indicated in bid, within the contractual delivery period after bid due date and till Contractual delivery period shall be

to Owner's account against submission of the documentary evidence. However, any increase in the rate of Customs duty beyond the contractual completion period shall be to bidder's account. In case of wrong classification, no variation including statutory variation of Customs Duty will be payable extra. Any decrease in the rate of Customs duty shall be passed on to the Owner.

5.6.4 **In the event of Change in Tax law caused by introduction of the Goods and Services Tax ("GST"),** Owner and Successful Bidder shall mutually determine the adjustment in the Bid Price, by factoring the impact of GST on the finished product and the compliances/action steps that may be required from the Successful Bidder to ensure availment of all permissible tax credits and compliance with all Tax laws by the Owner. Such adjustment in the Bid Price due to introduction of GST shall be made on account of transactions pursuant to the contract between the Owner and the Successful Bidder. Any claim for change in applicability of the Tax Law on account of introduction of GST shall be supported by relevant documentation. The Successful Bidder shall also agree upon providing to Owner suitable indemnities for failure of the Vendor/Contractor to undertake requisite compliances/action steps that may be required to ensure availment of all permissible tax credits and compliances with the Tax laws by the Owner.

5.6.5 No variation shall be allowed on account of any taxes applicable outside India.

5.6.6 "**Change in Tax Law**" shall means the occurrence of any of the following after the Base Date i.e. Due Date for submission of Bid:

a. The enactment of any new tax law in India;
b. Increase/ Decrease in the rate of Taxes in force after the Base Date;
c. Change in the basis of computation of Taxes in force after the Base Date,
d. Any change in the interpretation or enforcement of any tax laws
    a. by Government of India or State Government or local authority in India via issuance of circulars/ clarifications which are considered to be accurate by the Owner; or
    b. any court or tribunal in India having final authority with regard to the issue in question.in such a manner that it has a material effect (positive or negative) on the Contract.

5.6.7 Notwithstanding anything mentioned above, Change in Law will not include any change in direct tax laws (which include income tax, corporate tax, profession tax and wealth tax) for which the Supplier is the responsible party. Change in Tax law shall not include any court order having an impact (otherwise than as specified above) on the pricing of the obligations to be executed under this Contract.

5.6.8 Say as otherwise specifically provided hereinabove in this Clause, the Contract Price shall be inclusive of all deductions of taxes and duties and all applicable statutory deductions to be made from the payments.

5.6.9 Supplier shall be responsible for availing all applicable concessions in taxes, duties, levies etc. as per terms of Purchase Order. Any loss, direct or implied, accrued to Corporation on account of supplier's failure to avail concessions shall be borne by Supplier.

5.6.10 The Supplier accepts full and exclusive liability for the payment of any and all taxes, duties, Octroi, rates, cess, levies and statutory payments payable under all or any of the statutes etc.

Variations of taxes and duties arising out of the amendments to the Central / State enactments, in respect of sale of goods / services covered under this bid shall be to HPCL's account, so long as :

• They relate to the period after the opening of the price bid, but before the contracted completion period (excluding permitted extensions due to delay on account of the contractors, if any) or the actual completion period, whichever is earlier; and

• The Supplier furnishes documentary evidence of incurrence of such variations, in addition to the invoices/documents for claiming Cenvat /Input Tax credit, wherever applicable. All contributions and taxes for unemployment compensation, insurance and old age pensions or Annuities now or hereafter imposed by Central or State Governmental authorities which are imposed with respect to or covered by the wages, salaries or other compensations paid to the persons employed by the Supplier and the Supplier shall be responsible for the compliance with all obligations and restrictions imposed by the Labour Law or any other law affecting employer-employee relationship and the Supplier further agrees to comply and to secure the compliance of all sub-contractors with all applicable Central, State, Municipal and local laws, and regulations and requirements of any

Central, State or Local Government agency or authority.
Supplier further agrees to defend, indemnify and hold harmless from any liability or penalty which may be imposed by the Central, State or Local authorities by reason of any violation by Supplier or sub-contractor of such laws, regulations or requirements and also from all claims, suits or proceedings that may be brought against the Owner arising under, growing out of, or by reasons of the work provided for by this contract by third parties, or by Central or State Government authority or any administrative sub-division thereof. The Supplier further agrees that in case any such demand is raised against the Owner, and Owner has no way but to pay and pays/makes payment of the same, the Owner shall have the right to deduct the same from the amounts due and payable to the Supplier. The Supplier shall not raise any demand or dispute in respect of the same but may have recourse to recover/receive from the concerned authorities on the basis of the Certificate of the Owner issued in that behalf.

5.6.11 The rates quoted should be inclusive of all rates, cess, taxes and sales tax on works contracts wherever applicable. However, wherever the sales tax on works contract is applicable and is to be deducted at source, the same will be deducted from the bills of the Contractor and paid to the concerned authorities. The proof of such payments of sales tax on works contract will be furnished to the contractor.

5.6.12 Income tax will be deducted at source as per rules at prevailing rates, unless certificate, if any, for deduction at lesser rate or nil deduction is submitted by the Contractor from appropriate authority.

5.6.13 The Supplier shall provide accurate particulars of PAN number as required, to enable issuance of TDS (Tax Deduction at Source) certificate.

## 6.0 TRAINING

6.1 Bidder shall arrange for training of M/s HPCL's engineers at site. The training shall cover the design, operation and maintenance of supplied pump-motor/VFD package by the representative of respective manufacturer and for a minimum of 5 working days for a group of 10 engineers.

6.2 Bidder shall quote training fees in the Training price head in online price bid and this shall form part of commercial evaluation.

## 7.0 ANNUAL MAINTENANCE CHARGES (AMC):

7.1 Bidder shall quote for annual maintenance charges in online e-portal of HPCL, on Lumpsum basis per year for three consecutive years starting just after expiry of warranty for each item as specified in the Material Requisition and this shall form part of commercial evaluation, **excluding** the supply of spares and consumable and services required for total operation and maintenance of the system. The replacement/maintenance aspects of the total system shall be attended on call basis as per HPCL Instructions. Personal deployed shall be competent & must have experience on maintenance of similar systems. The tools, tackles instruments required shall be arranged by owner. The Bidder shall ensure that all possible spares which may be required by the system will be available during the entire period of AMC i.e. **3 years.** A list of recommended spares shall be submitted along with the unpriced Bid offer. **Initially Bidder shall submit Bank Guarantee equivalent to the cost of maintenance contract to cover 3 Years AMC Period.** However, HPCL may accept reducing BG value pertaining to consecutive years for AMC on completion of each year AMC. The travel, boarding & lodging of service engineer/technician shall be borne by the bidder.

7.2 The order for AMC shall be placed separately by HPCL (may be after defect liability Period) and may not form part of the current order for Mainline Centrifugal pump items.

7.3 Bidder shall furnish supporting letters from Motor and VFD manufacturers stating their logistic & back to back support to the vendor for 15 years.

7.4 Terms and conditions for Annual Maintenance Charges are details in Chapter — 5 of this bid document.

The service under post warranty maintenance shall include:

7.4.1 Periodic maintenance of mainline pumps with driver motors

7.4.2 Overhauling for main line pumps with driver motors

7.4.3 Periodic maintenance of VFD (medium / high voltage)

7.4.4 Break down maintenance of VFD (medium / high voltage)

7.4.5 Trouble shooting (including pump, VFD and motor)

7.4.6 Preventive maintenance shall involve, complete checking, repair /replacement of defective part/components and detailed reporting. Repairing & maintenance activity should be completed at the earliest and should not affect the activity of the pumping station as specified in tender documents.

7.4.7 Emergency maintenance in the event of any malfunction of the system, experienced service engineer shall be made available at site with-in one week on the receipt of such information from the owner & the system must be brought to the Normal within 24 hrs after reporting at site.

**8.0** BID SECURITY

8.1 The Bidder shall furnish, as part of his bid, a bid security in original for the amount specified in the Invitation for bid (IFB).

8.2 The bid security is required to protect the Owner against the risk of Bidder's conduct, which would warrant the security's forfeiture.

8.3 In case of Domestic Bidders, the Bid Security shall be in the form of an irrevocable Bank Guarantee (in the format provided by Owner) issued by any Indian Scheduled Bank (other than Co-operative Bank). In case of Foreign Bidders, the Bid Security shall be in the form of an irrevocable Bank Guarantee (in the format provided by Owner) issued by any Indian Scheduled Bank (other than Co-operative Bank) or by a reputed International Bank duly confirmed by an Indian Bank acceptable to HPCL. Bid Security shall be issued in favour of "M/s Hindustan Petroleum Corporation Limited".

8.4 Unsuccessful Bidder's bid security will be discharged/returned as promptly as possible, immediately after price bid opening through cheque or e-payment.

8.5 The successful Bidder's bid security will be discharged upon the Bidder's accepting the Contract/ Purchase Order, and furnishing the Contract-cum-equipment performance bank guarantee.

8.6 The bid security may be forfeited:

a) If a Bidder withdraws his bid during the period of bid validity

**or**

b) In the case of a successful Bidder, if the Bidder fails or refuses to:

(vii) Accept the Purchase Order in accordance with agreed terms and conditions.

ii) Furnish Contract performance bank guarantee as per bid document/ Purchase Order.

8.7 Bid Security should be in favour of Hindustan Petroleum Corporation Limited (HPCL) and addressed to HPCL as per Cl. No. 4 of NIT. However, original Bid Security should be enclosed separately in a sealed cover and submitted along with the bid. Bid Security must indicate the Bid Document number and the item for which the Bidder is quoting. This is essential to have proper co-relation at a later date. The Bid Security shall be strictly in the form provided in the bid document

8.8 Central Public Sector Undertaking of Govt. Of India are exempted from furnishing the bid security. Firms registered with NSIC are also exempted from furnishing bid security, provided they are registered for the tendered items and up to the monetary limit they intend to quote. Provided further that they submit a copy of the current and valid registration certificate for the quoted item and monetary value along with their bid(s). Owner reserves right to verify the registration

certificate provided, with relevant authorities.

8.9 Validity of Bid security shall be **120 days** from the Bid Due Date.

**9.0 CONTRACT PERFORMANCE BANK GUARANTEE [CPBG]**

9.1 In partial modifications of the terms specified in Clause no. 31 of General Purchase Conditions (Indigenous) and clause 11 of General Purchase Conditions the General Purchase Conditions (Imports), as a Performance security, the successful Bidder, to whom the work is awarded, shall be required to furnish within 15 days of notification of award of contract (Letter of Acceptance) a Performance Bank Guarantee as per proforma attached herewith in favour of the Owner.

9.2 The Bank Guarantee amount shall be equal to TEN PERCENT (10%) of the Total Order Value and it shall guarantee the faithful performance of the Order in accordance with the Terms and conditions specified in the documents and specifications.

9.3 In case of Domestic Bidders, the CPBG shall be in the form of an irrevocable Bank Guarantee (in the format provided by Owner) issued by any Indian Scheduled Bank (other than Co-operative Bank). In case of Foreign Bidders, the CPBG shall be in the form of an irrevocable Bank Guarantee (in the format provided by Owner) issued by any Indian Scheduled Bank (other than Co-operative Bank) or by a reputed International Bank duly confirmed by an Indian Bank acceptable to HPCL. Bank Guarantee shall be issued in favour of “M/s Hindustan Petroleum Corporation Limited”.

9.4 The supplies made against this order shall be fully guaranteed against any manufacturing defects/poor workmanship/inferior quality etc. for a period of 12 months from the date of commissioning or 18 months from the date of supply whichever is earlier. During this period, you will arrange to repair/replace any defective parts free of cost or replace complete set if required. Guarantee Certificate should be submitted along with dispatch documents.

9.5 The Composite Bank Guarantee shall be valid upto a period of 3 months beyond the expiry of defect Liability period. The guarantee amount shall be payable without demur and demand to the Owner in the currency of the Contract.

9.6 In case of Foreign Bidders, in addition to above CPBG, additional Bank Guarantee equivalent to 5% (of total order value) need to be submitted as mentioned in Payment Terms Clause No: 12 of this Chapter.

9.7 The Total Order Value for this purpose shall be as under :

9.7.1 <u>Indian Bidders</u>:

FOT dispatch value including Loading on to Trailers/ Trucks but excluding Excise Duty, Sales Tax, transportation charges etc.,

9.7.2 <u>Foreign Bidders</u>:

In case Order is placed on FOB / CFR basis, the FOB value, and

9.8 In case, the Contract Performance Bank Guarantee stated above gets reduced/ deducted for reasons of non fulfillment of any Contractual obligations upto the completion of guarantee period, the Bidder shall immediately take action to increase the value of Bank Guarantee to TEN

PERCENT (10%) of the Contract price, to cover his guarantee/ warranty obligations.

9.9 The Performance Guarantee will be returned to the Bidder without any interest at the end of the warranty / guarantee period subject to fulfillment of all contractual obligations by the Bidder.

**10.0 PRICE REDUCTION FOR DELAY IN DELIVERY**:

10.1 In partial modifications of the terms specified in the Clause No.18 of General Purchase Conditions (Indigenous) and Clause No. 7 of General Purchase Conditions (Imports).In case of delay in execution of the order beyond the date of delivery as stipulated in the order or any extension sanctioned, the Owner may at his option accept delayed delivery at prices reduced by a sum equivalent to ONE HALF OF ONE percent (½%) of the value of any goods **not delivered** for every week of delay or part thereof, limited to a maximum of 5% OF TOTAL ORDER VALUE.

Further, incase, of delay in delivery, the bidder shall calculate the applicable price reduction for delayed delivery and raise their invoices net of the same.

10.2 The Total Order Value for this purpose shall be as under:

10.2.1 Indian Bidders:

FOT dispatch value including Loading on to Trailers/ Trucks but excluding Excise Duty, Sales Tax, transportation charges etc.

10.2.2 Foreign Bidders:

In case Order is placed on FOB/CFR basis, the FOB value.

10.3 Vendor has to respond within 15 days of notice given by owner for supervision of Installation / erection and commissioning and within 30 days for training, failing which, LD shall be applicable on FOT/FOB value including supervision, commissioning and training charges

10.4 Price Reduction Schedule under Annual Maintenance Contract (AMC):

If the Contractor fails to provide the required services,
**Break-down penalty would be applicable as follows:**
- For Shutdown restored within 72 hours - No Penalty.
- For Shutdown restored within 72 to 120 hours – 5% Penalty of the net quarterly AMC invoice amount.
- For Shutdown beyond 120 hours, 10% Penalty.

Maximum penalty would be applicable 10% on net quarterly AMC invoice amount.

Contractor/Bidder should suggest HPCL for Recommended spares

**11.0 INSURANCE**

11.1 In case of foreign bidder, Owner will arrange Insurance from FOB port of shipment covering Marine and Inland Transit Insurance (in India).

11.2 In case of Indian bidder, bidder to arrange insurance till material reaches site.

**12.0 PAYMENT TERMS**

12.1 **SUPPLY**

12.2 Bidders to note that Advance Payment is not permissible in the contract. In addition to the Payment terms specified in the General Purchase Conditions, the following terms shall be applicable

12.2.1 **Indian Bidder:**

(a) 5% on approval of drawings (identified in Purchase Requisition in Code-2) against Bank Guarantee for equivalent amount valid upto completion of all supplies.

(a) 5% against proof of release of Orders of Motors, VFD, Lube Oil system, UCP, Condition Monitoring system, Casing/Barrel, Shaft & Impellor against Bank Guarantee for equivalent amount valid upto completion of all supplies.

(b) 85% payment within 30 days (in Indian Rupees only) on receipt of goods at site(s) with full taxes, duties and transportation charges against receipt of dispatch documents (consisting Purchaser / WorleyParsons inspection release note, invoice, packing list, LR/GR at HPCL's Office/VVSPL Division.

(c) Balance 5% on receipt of final drawings/documents etc. as specified in Material Requisition and completion of successful supervision of performance testing and successful commissioning at site as specified in Material Requisition

12.2.2 **Foreign Bidder:**

(a) 5% payment through L/C on approval of drawings (identified in Purchase Requisition in Code-2) against Bank Guarantee for equivalent amount valid upto completion of all supplies.

(b) 5% payment through L/C against proof of release of Orders of Motors, VFD, Lube Oil system, UCP, Condition Monitoring system, Casing/Barrel, Shaft & Impellor against Bank Guarantee for equivalent amount valid upto completion of all supplies.

(c) 85% payment against shipping documents through L/C. The shipping documents shall include Bill of Lading, packing list, freight memo, country of origin certificate, test certificated, Purchaser/WP inspection release note, drawings, catalogue etc. as specified in Material Requisition

(d) Balance 5% on receipt of final drawings/documents etc. as specified in Material Requisition and completion of supervision of performance testing and successful commissioning at site as specified in Material Requisition.

**Note : 1 for 12.2.1 & 12.2.2 :-**

If bidder wants payment after completing supply of part package (i.e, after supplying either Pump- motor set or VFD or Unit Control Panel), payment will be released against BG of equivalent amount. BG to be valid upto delivery period plus extra 30 days for claim period. In this case Bidder to submit payment break up for package to EPMC for their approval.

12.3 **SUPERVISION OF INSTALLATION / ERECTION, TESTING , COMMISSIONING & TRAINING**

Payment shall be 100% against monthly bills to be submitted by Seller duly certified by Site In-charge within 30 days of receiving duly certified bills.

**Notes :**

i. All foreign currency payments (for supplies) to foreign Bidder shall be released through an irrevocable Letter of Credit, which shall be opened through Government of India Nationalized Bank and hence shall not be confirmed.

In case any Bidder insists on confirmation, charges towards confirmation shall be borne by him. LC shall be established within 30 days after receipt of unconditional acceptance of Letter of Acceptance (LOA) together with Contract Performance Bank Guarantee for 15% of Total Order value.

ii. The bills of domestic/foreign vendors will be reduced by the amount recoverable towards Price reduction for delay (Clause No. 6 of this Section) in case of delay in delivery. For this purpose the Bidder shall negotiate the Invoice with the reduced amount.

iii. Only the charges if any of Owner's Bank in India shall be to Owner's account. All other Bank charges including those in Bidder's country shall be to Bidder's account.

iv. All payments shall be made in the Currency quoted.

v. No Interest charges for delay in payments, if any, shall be payable by the Owner.

vi. In case of Indian Bidder (Bidder), variation, if any, on account of foreign exchange rate and/or customs duty on their built-in import content, as per terms of bid document, shall be claimed separately by Bidder after receipt of goods at site(s). However, any price benefits to the Owner, on account of such variation as per terms specified in the bid document, shall be passed on to the Owner along with invoicing itself.

vii. Invoices against the payment against Cl.12.2 above in case of Indian & foreign bidders shall be restricted to maximum three numbers against supply.

12.4 **ANNUAL MAINTENANCE CHARGES**

12.4.1 100% payment towards Annual Maintenance shall be made at the end of the quarter of the contractual year. The payment for AMC shall be made against invoices of vendor based on actual visit of the vendor as per requirements of HPCL.

Note: Owner will open two separate LCs as below.
a) For Supply
b) For Supervision of Installation, Commissioning & Training

## 13.0 TERMS & CONDITIONS FOR SUPERVISION OF INSTALLATION/ERECTION TESTING & COMMISSIONING

Terms & conditions for supervision of Installation/erection testing & commissioning will be governed by the terms enclosed under Chapter– 5.

## 14.0 LIMITATION OF LIABILITIES:

14.1 The final payment by the Owner in pursuance of the contract terms shall not mean release of the Contractor from all his liabilities under the contract. The Contractor will be liable and committed under this contract to fulfill all his liabilities and responsibilities, till such time the Owner releases Contract Performance Guarantee.

14.2 Notwithstanding anything contrary contained herein, the aggregate total liability of Seller, excluding his liability towards infringement of patent, trade mark or industrial design rights, breach of Confidentiality, Anti-Bribery, Corruption and Conflicts of Interest, under the contract or otherwise shall be limited to 100% of value of Purchase order. However, neither party shall be liable to the other party for any indirect and consequential damages, loss of profits or loss of production.

## 15.0 LIABILITY CLAUSE

It is expressly understood and agreed by and between Bidder and M/s Hindustan Petroleum Corporation Limited, (Indian Public Sector Undertaking) that M/s Hindustan Petroleum Corporation Limited is entering into this agreement solely on its own behalf and not on behalf of any other person or entity. In particular, it is expressly understood and agreed that the Government of India is not a party to this agreement and has no liabilities, obligations or rights hereunder. It is expressly understood and agreed that M/s Hindustan Petroleum Corporation Limited is an independent legal entity with power and authority to enter into contracts solely on its own behalf under the applicable Laws of India and general principles of Contract Law. The Bidder expressly agrees, acknowledges and understands that M/s Hindustan Petroleum Corporation Limited. is not an agent, representative or delegate of the Government of India. It is further understood and agreed that the Government of India is not and shall not be liable for any acts, omissions, commissions, breaches or other wrongs arising out of the contract. Accordingly Bidder hereby expressly waives, releases and foregoes any and all actions or claims, including cross claims, impleader claims or counter claims against the Government of India arising out of this contract and covenants not to sue to Government of India as to any manner, claim, cause of action or thing whatsoever arising of or under this agreement.

## 16.0 DEFECTS AFTER TAKING OVER OR TERMINATION OF WORK CONTRACT BY OWNER :-

The Contractor shall remain responsible and liable to make good all losses or damages that may occur/appear to the work carried out under this Contract within a period of 12 months from date of issue of the Completion Certificate and/or the date of Owner taking over the work, whichever is earlier. The Contractor shall issue a Bank Guarantee to the Owner in the sum of 10% of the work entrusted in the Contract, **from any Scheduled bank (other than Co-operative Bank)** acceptable to the Owner and if however, the Contractor fails to furnish such a Bank Guarantee the Owner shall have right to retain the Security Deposit and Retention Money to cover the 10% of the Guarantee amount under this clause and to return/refund the same after the expiry of the period of 12 months without any interest thereon.

## 17.0 TERMINATION OF CONTRACT:-

17.1 The owner may terminate the contract at any stage of the construction for reasons to be recorded in the letter of termination.

17.2 The Owner inter alia may terminate the Contract for any or all of the following reasons that the contractor

a. Has abandoned the work/Contract.

b. Has failed to commence the works, or has without any lawful excuse under these conditions suspended the work for 15 consecutive days.

c. Has failed to remove materials from the site or to pull down and replace the work within 15 days after receiving from the Engineer written notice that the said materials or work were condemned and/or rejected by the Engineer under specified conditions.

d. Has neglected or failed to observe and perform all or any of the terms acts, matters or things under this Contract to be observed and performed by the Contractor.

e. Has to the detriment of good workmanship or in defiance of the Engineer's instructions to the contrary sub-let any part of the Contract.

f. Has acted in any manner to the detrimental interest, reputation, dignity, name or prestige of the Owner.

g. Has stopped attending to work without any prior notice and prior permission for a period of 15 days.

h. Has become untraceable.

i. Has without authority acted in violation of the terms and conditions of this contract and has committed breach of terms of the contract in best judgement of the owner.

j. Has been declared insolvent/bankrupt.

k. In the event of sudden death of the Contractor.

17.3 The owner on termination of such contract shall have the right to appropriate the Security Deposit, Retention Money and invoke the Bank Guarantee furnished by the contractor and to appropriate the same towards the amounts due and payable by the contractor as per the conditions of Contract and return to the contractor excess money, if any, left over.

17.4 **In case of Termination of the contract, Owner shall have the right to carry out the unexecuted portion of the work either by themselves or through any other contractor(s) at the risk and cost of the Contractor. In view of paucity of time, Owner shall have the right to place such unexecuted portion of the work on any nominated contractor(s). However, the overall liability of the Contractor shall be restricted to 100 % of the total contract value.**

17.5 The contractor within or at the time fixed by the Owner shall depute his authorized representative for taking joint final measurements of the works executed thus far and submit the final bill for the work as per joint final measurement within 15 days of the date of joint final measurement. If the contractor fails to depute their representative for joint measurement, the owner shall take the measurement with their Engineer-in-Charge/Site-in-Charge or any other outside representatives. Such a measurement shall not be questioned by the Contractor and no dispute can be raised by the Contractor for purpose of Arbitration.

17.6 The Owner may enter upon and take possession of the works and all plant, tools, scaffoldings, sheds, machinery, power operated tools and steel, cement and other materials of the Contract at the site or around the site and use or employ the same for completion of the work or employ any other contractor or other person or persons to complete the works. The Contractor shall not in any way object or interrupt or do any act, matter or thing to prevent or hinder such actions, other Contractor or other persons employed for completing and finishing or using the materials and plant for the works. When the works shall be completed or as soon thereafter the Engineer shall give a notice in writing to the Contractor to remove surplus materials and plant, if any, and belonging to the Contractor except as provided elsewhere in the Contract and should the Contractor fail to do so within a period of 15 days after receipt thereof the Owner may sell the same by public auction and shall give credit to the contractor for the amount realised. The Owner shall thereafter ascertain and certify in writing under his hand what (if anything) shall be due or payable to or by the Owner for the value of the plant and materials so taken possession and the expense or loss which the Owner shall have been put to in procuring the works, to be so completed, and the amount if any, owing to the Contractor and the amount which shall be so certified shall thereupon be paid by the Owner to the Contractor or by the Contractor to the Owner, as the case may, and the Certificate of the Owner shall be final and conclusive between the parties.

17.7 When the contract is terminated by the Owner for all or any of the reasons mentioned above the Contractor shall not have any right to claim compensation on account of such termination.

## 18.0 ARBITRATION – Also Refer Annexure-Y of Chapter 9

18.1 All disputes and differences of whatsoever nature, whether existing or which shall at any time arise between the parties hereto touching or concerning the agreement, meaning, operation or effect thereof or to the rights and liabilities of the parties or arising out of or in relation thereto whether during or after completion of the contract or whether before after determination, foreclosure, termination or breach of the agreement (other than those in respect of which the decision of any person is, by the contract, expressed to be final and binding) shall, after written notice by either party to the agreement to the other of them and to the Appointing Authority

hereinafter mentioned, be referred for adjudication to the Sole Arbitrator to be appointed as hereinafter provided.

18.2 The appointing authority shall either himself act as the Sole Arbitrator or nominate some officer/retired officer of Hindustan Petroleum Corporation Limited (referred to as owner or HPCL) or a retired officer of any other Government Company in the Oil Sector of the rank of Ch. Manager & above or any retired officer of the Central Government not below the rank of a Director, to act as the Sole Arbitrator to adjudicate the disputes and differences between the parties. The contractor/vendor shall not be entitled to raise any objection to the appointment of such person as the Sole Arbitrator on the ground that the said person is/was an officer and/or shareholder of the owner, another Govt. Company or the Central Government or that he/she has to deal or had dealt with the matter to which the contract relates or that in the course of his/her duties, he/she has/had expressed views on all or any of the matters in dispute or difference.

18.3 In the event of the Arbitrator to whom the matter is referred to, does not accept the appointment, or is unable or unwilling to act or resigns or vacates his office for any reasons whatsoever, the Appointing Authority aforesaid, shall nominate another person as aforesaid, to act as the Sole Arbitrator.

18.4 Such another person nominated as the Sole Arbitrator shall be entitled to proceed with the arbitration from the stage at which it was left by his predecessor. It is expressly agreed between the parties that no person other than the Appointing Authority or a person nominated by the Appointing Authority as aforesaid, shall act as an Arbitrator. The failure on the part of the Appointing Authority to make an appointment on time shall only give rise to a right to a Contractor to get such an appointment made and not to have any other person appointed as the Sole Arbitrator.

18.5 The Award of the Sole Arbitrator shall be final and binding on the parties to the Agreement.

18.6 The work under the Contract shall, however, continue during the Arbitration proceedings and no payment due or payable to the concerned party shall be withheld (except to the extent disputed) on account of initiation, commencement or pendency of such proceedings.

18.7 The Arbitrator may give a composite or separate Award(s) in respect of each dispute or difference referred to him and may also make interim award(s) if necessary.

18.8 The fees of the Arbitrator and expenses of arbitration, if any, shall be borne equally by the parties unless the Sole Arbitrator otherwise directs in his award with reasons. The lumpsum fees of the Arbitrator shall be Rs. 70,000/- per case for transportation contracts and Rs. 1,00,000/- for engineering contracts and if the sole Arbitrator completes the arbitration including his award within 5 months of accepting his appointment, he shall be paid Rs. 10,000/- additionally as bonus. Reasonable actual expenses for stenographer, etc. will be reimbursed. Fees shall be paid stagewise i.e. 25% on acceptance, 25% on completion of pleadings/documentation, 25% on completion of arguments and balance on receipt of award by the parties

18.9 Subject to the aforesaid, the provisions of the Arbitration and Conciliation Act, 1996 or any statutory modification or re-enactment thereof and the rules made thereunder, shall apply to the Arbitration proceedings under this Clause.

18.10 The Contract shall be governed by and constructed according to the laws in force in India. The parties hereby submit to the exclusive jurisdiction of the Courts situated at Mumbai for all

purposes. The Arbitration shall be held at say Mumbai and conducted in English language.

18.11 The Appointing Authority is the Functional Director of Hindustan Petroleum Corporation Limited.

18.12 **Public Sector v/s. Government Department or vice versa :**

In case of contracts/agreement to be executed between Public Sector Enterprises / Government Departments, the following clause will be incorporated. "In the event of any dispute or difference between the parties hereto, such dispute or difference shall be resolved amicably by mutual consultation or through the good offices of empowered agencies of the Government. If such resolution is not possible, then, the unresolved dispute or difference shall be referred to arbitration of an arbitrator to be nominated by Secretary, Department of Legal Affairs ("Law Secretary"). The Arbitration & Conciliation Act, 1996) shall not be applicable to the Arbitration under this clause. The award of the arbitrator shall be binding upon the parties to the dispute, provided, however, that any party aggrieved by such award
may appeal for setting aside or revision of the award to Law Secretary whose decision shall bind the parties finally and conclusively. The said appeal should be filed within the period specified in the award of the arbitrator."
It is essential that, to avoid delay in nomination of arbitrator or initiation of arbitration proceeding, the Arbitration Clause or Agreement, as the case may be, is forwarded without fail at the time of making request for reference to the Law Secretary or Department of Legal Affairs.

18.13 **ARBITRATION CLAUSE IN FOREIGN PURCHASE AGREEMENTS – Also Refer Annexure-Y of Chapter-9**

1. Disputes or difference arising out of or in relation to this agreement shall be settled by Arbitration in India. The arbitration shall be by a Sole Arbitrator appointed by HPCL. The Sole Arbitrator will adjudicate the disputes and differences between the parties except those in respect of which the decision of any person is by the agreement expressed to be final and binding.
2. In the event of the Sole Arbitrator to whom the matter is originally referred to, is unable to act or he/she vacates the office, HPCL, shall nominate another Sole Arbitrator to settle the said disputes and differences.
3. The second Sole Arbitrator shall be entitled to proceed with the arbitration from the stage at which it was left by his/her predecessor.
4. The award of the arbitrator shall be final, conclusive and binding on all the parties to the agreement subject to the provisions of the # Arbitration & Conciliation Act, 1996, as in force in India and the rules made thereunder and for the time being in force. This agreement shall be covered by the laws of India.
5. The award shall be made in writing and shall be published by the Sole Arbitrator within six months after entering upon reference or within such further time mutually extended by the parties. The Sole Arbitrator shall have power to order and direct the parties to abide by, observe and perform such directions as the Sole Arbitrator may think fit and proper to issue having regard to the fact that the arbitration proceedings have to be completed within the specified period solely on the principles of Natural Justice.
6. The Sole Arbitrator shall be at liberty to appoint, if so necessary, any Accountant or Engineer or other person to assist him/her and act by the opinion so taken.
7. The Sole Arbitrator shall have powers to make one or more awards whether interim or otherwise in respect of the disputes and differences, and in particular, shall make separate awards in respect of each claim or cross claim of the parties.
8. The Sole Arbitrator shall be entitled to direct any of the parties to pay the cost of arbitration in such a manner and to such an extent as the Sole Arbitrator may in his discretion determine and shall also be entitled to require one or both the parties to deposit funds in such proportions to meet the arbitration expenses. The parties to arbitration, whenever called upon to do so, shall be bound to comply with such directions without any demur.

9. Notwithstanding anything contained to any other law, the parties hereby agree that the courts in the city of _____ (say Mumbai) alone shall have jurisdiction in respect of all or anything arising under this agreement and any award(s) made by the Sole Arbitrator hereunder shall be filed in the court in the city of _____ (say Mumbai _____) only.

## 19.0 LOADING AND PENALTY CLAUSE

**Refer Appendix-9 of Document No. 14495-00-ME-REQ-0001**

## 20.0 GRIEVANCE REDRESSAL MECHANISM

20.1 There is a grievance redressal mechanism in HPCL for vendors participating in the tender, the details of which are available on HPCL's website www.hindustanpetroleum.com

## 21.0 SUB-CONTRACTING

21.1 Sub-contracting of any work is not permissible. If a contractor submits his bid, qualifies and does not get the contract because of his being not the lowest, he will be prohibited from working as a subcontractor for the contractor who is executing the contract.

## 22.0 JURISDICTION

22.1 The courts at Mumbai (India) shall have exclusive jurisdiction over all Disputes arising under or in connection with the CONTRACT.

## 23.0 INTEGRITY PACT

23.1 Integrity Pact: All tenders and contracts shall comply with the requirements of the Integrity Pact (IP) if the value of such tenders or contracts exceed Rs.1 crore. Failure to sign the Integrity Pact shall lead to outright rejection of bid.

23.2 The successful tenderer shall execute Integrity Pact with Owner as per the enclosed Draft Integrity Pact Agreement. Hard copy of the same duly filled signed, stamped by authorized person and witnessed to be forwarded along with EMD in physical condition so as to be received at WORLEY PARSONS prior to bid due date and time.

## 24.0 UNLOADING

i. Please note that unloading will be arranged by HPCL, unless specifically mentioned in tender terms and conditions.
ii. Bidders are requested to quote "0" in the field provided for unloading, unless specifically mentioned in tender terms and conditions.
iii. Kindly note that in case Unloading is in HPCL's Scope and you are quoting for the same, the same shall not be considered during evaluation and PO shall be placed accordingly.

## 25.0 MAKE OF MATERIAL

25.1 The materials required to be supplied by the Bidder under this Contract shall be procured only from Owner / Consultant approved vendors enlisted under Annexure-1 of this SCP (Chapter 3 of this tender).Where the makes of materials are not indicated in the IFB, Bidder shall furnish the details (Past track record / credentials) of proposed makes and shall obtain prior approval of Owner / Consultant. Bidder shall not procure any item from vendors not approved by Consultant/ Owner.

25.2 Bidder is also required to ensure that equipment qualification criteria, specified elsewhere in the bid document, are also simultaneously met.

25.3 Bidder shall make an independent assessment of capability of all the vendors for timely deliveries of material / equipment. Any delays in deliveries by vendor(s) shall not be a cause of Schedule and cost implication.

25.4 Non-acceptance of a particular proposed Makes /vendor due to any reasons whatsoever shall not be a cause of Schedule and cost implication to the Owner.

25.5 At any stage of the project, if it comes to the notice of Owner/ Consultant that Vendor has procured material / equipment, intentionally or unintentionally whatsoever, from an unapproved vendor and/or items not falling in approved range of vendor(s), the same shall be rejected forthwith and Vendor shall be liable to replace such material /plant / machinery without any Schedule and cost implication to the Owner.

25.6 It is understood that should the name of Vendor be changed due to change in their Company or Corporate shareholding, Owner may accept such Vendors under its new name with prior approval.

25.7 Any such approval shall however, not absolve the Vendor from any of his obligations under the contract; neither shall any such approval signify nominations or instruction to use such a vendor. All approved vendors are deemed to have been freely chosen by the VENDOR at his own risk.

## 26.0 Annexure - 1 of SCP

### MECHANICAL SEALS

A. EAGLEBURGMANN INDIA PVT LTD
B. FLOWSERVE SANMAR LTD
C. JOHN CRANE

### AUTOMATIC RECIRCULATION VALVE

A. SCHRODAHL
B. YARWAY

### VIBRATION MONITORING SYSTEM

A. GE (BENTLEY NEVADA)
B. ROCKWELL AUTOMATION

### COUPLING

A. ESCO
B. JOHNCRANE

# Chapter – 4

A) General Purchase Conditions For Indigenous Equipment Materials

B) General Purchase Conditions For Imports

C) Special Packaging Requirement for Foreign Vendors.

# HINDUSTAN PETROLEUM CORPORATION LIMITED
## VVSPL Capacity Augmentation PROJECT

## (A) GENERAL PURCHASE CONDITIONS (GPC) FOR INDIGENOUS EQUIPMENT & MATERIALS

# INDEX

1. PRELIMINARY
2. DEFINITION
3. REFERENCE FOR DOCUMENTATION
4. CONFIRMATION OF ORDER
5. SALES CONDITIONS
6. COMPLETE AGREEMENT
7. INSPECTION-CHECKING-TESTING
8. OFFICIAL INSTITUTIONAL TESTING
9. WEIGHTS AND MEASUREMENTS
10. DESPATCH INSTRUCTIONS
11. OILS & LUBRICANTS
12. SPARE PARTS
13. PACKING AND MARKING
14. SHIPMENT AND SHIPMENT NOTICES
15. CONTROL REGULATIONS
16. TRANSIT RISK
17. RESPECT FOR DELIVERY DATES
18. DELAYED DELIVERY
19. DELAYS DUE TO FORCE MAJEURE
20. REJECTION, REMOVAL OF REJECTED GOODS AND REPLACEMENT
21. TRANSFER OF PROPERTY FROM THE VENDOR TO THE CORPORATION
22. PRICE
23. TAXES & DUTIES
24. CUSTOMS DUTY (CD) VARIATION
25. FOREIGN EXCHANGE (FE) VARIATION
26. TERMS OF PAYMENT
27. RECOVERY OF SUMS DUE
28. CHANGES
29. CANCELLATION / RISK PURCHASE CLAUSE
30. PATENTS AND ROYALTIES
31. PERFORMANCE GUARANTEE
32. NONWAIVER
33. NON ASSIGNMENT
34. PART ORDER/ SPLIT ORDER / REPEAT ORDER
35. VENDOR’S DRAWINGS AND DATA REQUIREMENT
36. TECHNICAL INFORMATION
37. SERVICES OF VENDOR’S PERSONNEL
38. VENDOR’S LIABILITY
39. CORPORATION’S MATERIAL
40. GUARANTEE FOR SPARE PARTS
41. ARBITRATION
42. JURISDICTION
43. VALIDITY OF OFFER
44. INTEGRITY PACT
45. ORDER OF PRECEDENCE
46. GENERAL

## GENERAL TERMS & CONDITIONS OF CONTRACT FOR SUPPLY

### 1. PRELIMINARY

1.1 This is a Contract for execution of job as defined in tender document at the specified location

1.2 The tenderer for the abovementioned supply is the company/ proprietary concern/ individual (as per details & address mentioned in the unpriced bid) and undersigned (digitally) is authorized to submit the bid on behalf of tenderer.

1.3 The terms and conditions mentioned hereunder are the terms and conditions of the Contract for the execution of the job mentioned under item 1.1 above.

1.4 It is the clear understanding between Hindustan Petroleum Corporation Limited and the tenderer that in case the bid of tenderer is accepted by Hindustan Petroleum Corporation Limited and an intimation to that effect is so issued and also a Procurement Order is on the tenderer this document shall form part of the Contract between the parties and terms and conditions hereunder would govern the parties interest.

1.5 Interpretation of Contract Documents: All documents forming part of the Contract are to be taken mutually explanatory. Should there be any discrepancy, inconsistency, error or omission in the contract, the decision of the Owner/Engineer-in-Charge/Site-in-Charge shall be the final and the contractor shall abide by the decision. The decision shall not be arbitrable. Items shown upon the drawings but not mentioned in the specification or described in the specifications without being shown on the drawings shall nevertheless be deemed to be included in the same manner as if they are shown in the drawings and described in the specifications.

1.6 Special conditions of Purchase : The special conditions of Purchase, if any provided and whenever and wherever referred to shall be read in conjunction with General Terms and Conditions of contract for Supply, specifications, drawings, and any other documents forming part of this contract wherever the context so requires. Notwithstanding the subdivision of the documents into separate sections, parts volumes, every section, part or volume shall be deemed to be supplementary or complementary to each other and shall be read in whole. In case of any misunderstanding arising the same shall be referred to decision of the Owner/ Engineer-in-Charge/Site-in-Charge and their decision shall be final and binding and the decision shall not be arbitrable.

It is the clear understanding that wherever it is mentioned that the Contractor shall do/perform a job and/or provide facilities for the performance of the job, the doing or the performance or the providing of the facilities is at the cost and expenses of the Contractor not liable to be paid or reimbursed by the Owner.

### 2. DEFINITIONS

a. The following expressions used in the Purchase Order shall have meaning as indicated

against each of these:

b. The CORPORATION / OWNER means HINDUSTAN PETROLEUM CORPORATION LIMITED, a company incorporated in India having its registered office at 17, Jamshedji Tata Road, Mumbai- 400 020 and shall include its successors and assignees.
Owner's CONSULTANT means WorleyParsons India Pvt Limited, having registered office at 5th Floor, B Wing, Lodha "I Think" Techno campus, off Pokhran road no.2, Thane (W) Maharashtra 400 607

c. "Goods / Materials": Goods and/or Materials shall mean any of the articles, materials, machinery, equipments, supplies, drawings, data and other property and all services including but not limited to design, delivery, installation, inspection, testing and commissioning specified to complete the order.

d. "Vendor / Seller / Supplier": Vendor / Seller / Supplier shall mean the person, firm or corporation to whom this Purchase Order is issued.

e. "Contractual Delivery Date": Contractual Delivery date is the date on which goods shall be delivered F.O.R/F.O.T. Despatching Point/ Destination in accordance with the terms of the Purchase Order. This contractual delivery date / period is inclusive of all the lead time for engineering, procurement of raw materials, manufacturing, inspection, testing, packing and any other activity whatsoever required to be accomplished for affecting the delivery at the agreed delivery point.

f. "Inspectors": Inspectors deputed by Corporation. g.

'Total Order Value' means:-

i. For Material Supply Contract: - The basic cost excluding taxes, duties, levies, freight etc. unless and until specifically mentioned in the purchase order.

ii. For Lump sum / Turnkey contract: - The total cost & all other cost inclusive of taxes, duties, levies, freight etc.

h. 'Total Order Value' shall be considered for the purpose of calculation of:

1. Price reduction on account of delay
2. Performance bank Guarantee Amount
3. Payment of advance, if any to be made.

i. **Note:** - The total order for levy of Price Reduction on account of delay shall include all types of escalation (including on account of Foreign Exchange Variation) agreed to in terms of Purchase Order.

## 3. REFERENCE FOR DOCUMENTATION

Purchase Order number must appear on order confirmation, correspondence, drawings, invoices, shipping notes, packings and on any documents or papers connected with the order.

## 4. CONFIRMATION OF ORDER

The Vendor shall acknowledge the receipt of the Purchase Order within ten days following the mailing of this order and shall thereby confirm his acceptance of this Purchase Order in its entirety without exceptions. The acknowledgment will bear on both purchase order and General Procurement Conditions.

## 5. SALES CONDITIONS

With Vendor's acceptance of provisions of this Purchase Order, he waives and considers as cancelled any of his general sales conditions.

## 6. COMPLETE AGREEMENT

The terms and conditions of this Purchase Order shall constitute the entire agreement between the parties hereto. Changes will be binding only if the amendments are made in writing and signed by an authorized representative of the Corporation and the Vendor.

## 7. INSPECTION-CHECKING-TESTING

a. The equipment, materials and workmanship covered by the Purchase Order shall be subject to inspection and testing at any time prior to shipment and or despatch and to final inspection within a reasonable time after arrival at the place of delivery. Inspectors shall have the right to carry out the inspection and testing which will include the raw materials at manufacturer's shop, at fabricator's shop and at the time of actual despatch before and after completion of packing.

b. All tests, mechanical and others and particularly those required by codes will be performed at the Vendor's expenses and in accordance with Inspector's instructions. The Vendor will also bear the expenses concerning preparation and rendering of tests required by Boiler Inspectorate or such other statutory testing agencies or by any other reputed inspection agencies as may be nominated by the Corporation.

c. Before shipping or despatch, the equipment and or materials will have to be checked and stamped by inspectors who are authorized also to forbid the use and despatch of any equipment and/or materials which during tests and inspection fail to comply with the specifications, codes and testing requirements.

d. The vendor shall inform the Corporation at least eight days in advance of the exact place, date and time of rendering the equipment or materials for required inspection.

e. The vendor shall provide free access to inspectors during normal working hours at Vendor's or his/its sub-Vendor's works and place at their disposal all useful means of performing, checking, marking, testing, inspection and final stamping.

f. Even if the inspections and tests are fully carried out, Vendor would not be absolved to any degree from his responsibilities to ensure that all equipments and materials supplied comply strictly with requirements as per agreement both during construction, at the time of delivery, inspection, on arrival at site and after its erection or start-up and guarantee period as stipulated in clause 30 hereof.

g. The Vendor's responsibility will not be lessened to any degree due to any comments made by the Corporation and Inspectors on the Vendor's drawings or by Inspectors witnessing any chemical or physical tests.

h. In any case, the equipment and materials must be in strict accordance with the Purchase order and/or its attachments failing which the Corporation shall have the right to reject the goods and hold the Vendor liable for non-performance of contract.

## 8. OFFICIAL INSTITUTIONAL TESTING

a. In addition to testing and inspection by Inspectors mentioned above, nominated agencies or similar institutional agencies like Boiler Inspectorate may be assigned for official testing of all coded equipment. The Vendor shall ensure that all Procedures for preparation and Performance of tests prescribed by such Institutions shall be completed scrupulously.

b. The Vendor is required to send to such Institutions as may be designated by the Corporation at least three sets of construction drawings for each equipment and calculations. All manufacturer's mill's tests certificates and analytical reports from material laboratories in

respect of all raw materials and components employed shall have to be presented to such institution's Inspectors in the number of copies required. Vendor shall be responsible for any delay in submission of necessary certificates. The Vendor shall maintain close liaison with the Corporation and Institution's Inspectors to maintain schedule and delay, if any in this process will not be taken into consideration as a cause of Force Majeure.

## 9. WEIGHTS AND MEASUREMENTS

a. All weights and measurements recorded by the Corporation on receipt of goods at site will be treated as final.

b. Vendor's shipping documents and invoices must contain the following data:

   i. Unit net weight

   ii. Unit gross weight (packing included)

   iii. Dimensions of packing.

## 10. DESPATCH INSTRUCTIONS

a. Unless otherwise specifically advised in writing, goods shall not be despatched without prior inspection, testing and Release Order / Materials Acceptance Certificates issued by Inspectors.

b. In case despatch by rail is specified in the Purchase Order, vendor shall exercise due care and ensure that the consignment shall be booked under appropriate railway classification, failing which, any additional freight incurred by Corporation due to Vendor's booking the material under a wrong classification shall be to Vendor's account.

c. The goods shall be consigned in the name of consignee as applicable.

d. Corporation's warehouse is open to receive stores between 9.00 A.M and 3 P.M on all working days. No goods will be accepted after 3.00 P.M.

e. Corporation reserves the right to advise any change in despatching point / destination and / or mode of transport, as may be required. Any extra expenditure on this account supported by documentary evidence will be reimbursed by the Corporation.

## 11. OILS & LUBRICANTS

The first filling of oils and lubricants, if any, required for every equipment shall be included in the price and appropriate products manufactured by the Corporation (HPCL) shall be used. The Vendor shall also recommend the quality / quantity of oils and lubricants required for one-year continuous operation.

## 12. SPARE PARTS

a. The Vendor must furnish itemised price list of spare parts indicating quantity, unit rate & total rate required for two years operation of the main equipment and prime movers also, if mentioned in the tender.

b. The Vendor shall provide the necessary cross sectional drawing to identify the spare parts numbers and their location as well as inter-changeability chart.

## 13. PACKING AND MARKING

a. The Materials shall be suitably packed for safe transportation till receipt at site and should be commensurate with best possible practices of packing, unless specifically stipulated in the Technical specifications, to avoid any damage during transit.

b. All fragile and exposed parts shall be packed carefully and the package shall bear the words '**HANDLE WITH CARE**', '**THIS SIDE UP'** and '**FRAGILE**'.

c. All holes and openings and also other delicate surfaces shall be carefully protected against bad weather. All threaded fittings shall be greased and provided with plastic caps. All small pieces shall be packed in cases.

d. The Supplier shall be liable for all damages or breakage to the Materials due to defective or insufficient packing as well as for corrosion due to insufficient protection.

e. Detailed packing list in waterproof envelope shall be kept in each package together with material and one copy of packing list shall be fastened outside the box in waterproof envelope.

f. Each package shall be marked in bold letters on the external three surface of the package as follows:

i. From: Address of Supplier / Sub-supplier.

ii. For: Hindustan Petroleum Corporation Ltd. _____ (location)

iii. Item:

iv. Package No. : _____ of total packages

v. Dimensions: _____ (Dimensions of each package)

vi. Weight: _____ (Weight of each package)

vii. Special Instruction for storage, if any.

viii. Special unloading arrangements, if required, shall be clearly mentioned in the Packing List.

ix. All packages containing the following items shall be packed separately as ordered and shall have additional clear marking for identification.

1. Mandatory Spares.
2. Commissioning Spares.

## 14. SHIPMENT AND SHIPMENT NOTICES

a. The Vendor shall make shipment only after prior approval by Inspectors whenever specifically mentioned. In the event of the Vendor having been advised to hold shipments(s) for any reason whatsoever the Vendor shall hold the materials in his / its warehouse for at least 30 days without any compensation; or without prejudice to any reduction in price already accrued on account of delay.

b. Within 24 hours of shipment, Vendor shall inform despatch particulars to Corporation & Consultant's Project office & site office by fax / courier / email.

c. The Vendor shall carefully note the destination of materials.

d. The demurrage or other expenses incurred owing to any negligence, delay, default on the part of the Vendor will be to Vendor's account.

## 15. CONTROL REGULATIONS

The supply, despatch and delivery of goods shall be arranged by the Vendor in strict conformity with the statutory regulations including provision of Industries (Development and Regulation) Act

1951 and any amendment thereof as applicable from time to time. The Corporation disowns any responsibility for any irregularity or contravention of any of the statutory regulations in manufacture or supply of the stores covered by this order.

**16. TRANSIT RISK**

Transit Risk insurance shall be covered by the Corporation. The Vendor shall advise the despatch particulars to Corporation immediately after shipment.

**17. RESPECT FOR DELIVERY DATES.**

Time of delivery as mentioned in the Purchase Order shall be the essence of the contract and no variation shall be permitted except with prior authorization in writing from the Corporation. Goods should be delivered securely packed and in good order and condition at the place and within the time specified in the Purchase Order for their delivery.

**18. PRICE REDUCTION FOR DELAYED DELIVERY**

In case of delayed delivery, prices will be reduced @1/2% of the total basic order value for every week of delay or part thereof subject to a maximum of @5% of the total basic order value.

NOTE :

a. Price Reduction shall be applicable only on the basic cost and on Full complete week (s) and for fractional days Price reduction shall be applicable on pro-rata, if any.

b. Initially Price Reduction shall be applicable for total basic order value and final Price Reduction settlement to be on undelivered portion in the contractual delivery period.

**19. DELAYS DUE TO FORCE MAJEURE**

a. Any delay in or failure of the performance of either part hereto shall not constitute default hereunder or give rise to any claims for damage, if any, to the extent such delays or failure of performance is caused by occurrences such as Acts of God or an enemy, expropriation or confiscation of facilities by Government authorities, acts of war, rebellion, sabotage or fires, floods, explosions, riots, or strikes. The Contractor shall keep records of the circumstances referred to above and bring these to the notice of the Engineer-in-Charge/Site-in-Charge in writing immediately on such occurrences. The amount of time, if any, lost on any of these counts shall not be counted for the Contract period. Once decision of the Owner arrived at after consultation with the Contractor, shall be final and binding. Such a determined period of time be extended by the Owner to enable the Contractor to complete the job within such extended period of time.

b. If Contractor is prevented or delayed from the performing any of its obligations under this Agreement by Force Majeure, then Contractor shall notify Owner the circumstances constituting the Force Majeure and the obligations performance of which is thereby delayed or prevented, within seven days of the occurrence of the events.

**20. REJECTION, REMOVAL OF REJECTED GOODS AND REPLACEMENT**

a. In case the testing and inspection at any stage by Inspectors reveal the equipment, material and workmanship do not comply with specification and requirements, the same shall be removed by the Vendor at their / its own expense and risk within the time allowed by the Corporation. The Corporation shall be at liberty to dispose of such rejected goods in such manner as they may think appropriate. In the event the Vendor fails to remove the rejected goods within the period as aforesaid, all expenses incurred by the Corporation for such

disposal shall be to the account of the Vendor. The freight paid by the Corporation, if any, on the inward journey of the rejected materials shall be reimbursed by the Vendor to the Corporation before the rejected materials are removed by the Vendor.

b. The Vendor will have to proceed with the replacement of that equipment or part of equipment without claiming any extra payment if so required by the Corporation. The time taken for replacement in such event will not be added to the contractual delivery period.

## 21. TRANSFER OF PROPERTY FROM THE VENDOR TO THE CORPORATION

a. The transfer of property shall be deemed to have taken place as follows subject to the provisions herein contained:

i. Exworks: when the vendor places the goods at the disposal of the buyer at the vendor's premises or another named place (i.e. works, factory, warehouse, etc.)
ii. F.O.R. or F.O.T despatch point: On handing over the equipment to the carrier against receipt and such receipt having been passed over to the Corporation.
iii. FOT / FOR destination station: On taking delivery from the transporters/railways at the destination station.
iv. Equipment sent freight carriage paid to the project Site: On arrival under lifting hook at the job site.
v. Equipment erected by the Vendor: On temporary acceptance at job site.
vi. Equipment commissioned by the Vendor: On taking over by the Corporation for regular operation after test runs at maximum capacity for specified period satisfactorily performed.

## 22. PRICE

a. Unless otherwise agreed to in the terms of the Purchase Order, the price shall be firm and not subject to escalation for any reason whatsoever till the execution of entire order, even though it might be necessary for the order execution to take longer than the delivery period specified in the order.

b. Exclusive of Central / State sales Tax, Excise Duty and / or such taxes & duties, which are leviable by law on sale of finished goods to Corporation and/or entry tax ,if any, leviable at destination state. The nature and extent of such levies shall be shown separately.

## 23. TAXES & DUTIES:

a. Excise Duty, Central Sales Tax, VAT, Service Tax as applicable shall be reimbursed for the materials consigned to Corporation as per limits indicated in the offer against documentary evidence to be furnished by the Supplier. Corporation shall pay only those taxes, duties and levies as indicated by Supplier at the time of bid submission/as agreed subsequently (prior to opening of priced bids). Taxes / Duties and/or Levies not indicated by supplier in Bid, but payable, shall be to Supplier's account. In case of any increase applicable in Excise Duty, Central Sales Tax, VAT, Service Tax, Octroi indicated with reference to limits mentioned in the offer / bid or new taxes / duties / levies imposed by the Indian Government through Gazette notification after the date of submission of last Price bid but prior to Contractual Delivery Date, the Corporation shall reimburse the increase in taxes & duties on satisfactory supporting documents.

b. Corporation will issue C-Form on all inter-state sales of materials by supplier to Corporation to enable supplier to avail concessional rate of Sales Tax on such sales.

c. Supplier shall be responsible for availing all applicable concessions in taxes, duties, levies

etc. as per terms of Purchase Order. Any loss, direct or implied, accrued to Corporation on account of supplier's failure to avail concessions shall be borne by Supplier.

d. Supplier shall indicate the Cenvatable Service Tax applicable on the services provided by them if any and the same shall be governed by GCC.

## 24. CUSTOMS DUTY (CD) VARIATION

a. The prices mentioned in offer are subject to Customs Duty (CD) variation. In case of any increase in rates of Customs Duty, Countervailing Duty, Special Additional Duty by the Indian Government through Gazette notification after the submission of last priced offer but within the time schedule for import of materials, as mentioned. Corporation shall reimburse the increase in taxes & duties at actuals against satisfactory supporting documents.

b. All downward variations in the rates of all such duties shall be to Corporation's account and same shall be calculated on actual CIF value of imported materials subject to the limit mentioned. Supplier shall submit all relevant documents to Corporation for the proof of duty paid by them within one month from the date of Bill of Entry (BOE).

c. Custom Duty variation shall be paid by Corporation up to the limit of maximum CIF value of imported components as indicated in the offer.

d. Rate of Custom Duty along with tariff number considered by Supplier in the prices shall be indicated in the offer.

## 25. FOREIGN EXCHANGE (FE) VARIATION

a. The CIF value in Indian Rupees / Foreign Currency to be declared should cover the currencies of the countries from which import of materials / components are envisaged to administer foreign currency variation.

b. The FE variation will be paid for if imports are made at the listed currency subject to ceiling limit.

c. The list of foreign currency, country of origin, ceiling of foreign value of import envisaged against each item of materials / components for import and rate of conversion into Rupees envisaged to be furnished in the tender. The period within which import shall be made after placement of LOI (i.e. Contractual Completion date of imports, herein after called CDD) shall also be indicated in the offer.

d. For reimbursement of foreign exchange variation, documentary evidence like bank certificates of remittance showing the date of payment and rate of foreign currency to Indian rupees to be furnished along with a copy of bills of entry duty attested by Customs department. All downward variations in conversion rate will be to Corporation's account.

e. Variation will be paid only if imports are made within the period as specified in offer for import. For imports made beyond that period, foreign currency variation will be paid based on the conversion rates prevailing on the last date of period of agreed to for imports. The last date for imports agreed will be the import landing date in India envisaged by Bill of Entry.

f. Bidder shall indicate the maximum CIF component along with currency of import. In case supplier imports less than the CIF value indicated in the bid, Duty. FE variation etc. shall be reimbursed only for the actual import carried out.

g. Foreign exchange variation, if any, downward or upward, will be paid only if imports are made within the agreed completion period.

h. For the purpose of Foreign Exchange variation reimbursement, State Bank of India (SBI) selling rate applicable on the bill of entry date or SBI selling rate on Bank remittance date or actual remittance rate, whichever is lower shall be considered. The following clause also to

be considered.

i. The BOE date may fall within Contractual Completion Date or beyond, it has already been stipulated as above conditions that no reimbursement for FE / CD variation will be paid if the actual import is beyond Contractual completion date. In such a case, the variation reimbursement will be restricted to the difference between the rate quoted in the tender and the lower of the following:

i. The actual remittance rate.

ii. SBI Bill selling rate on the date of CDD.

## 26. TERMS OF PAYMENT

a. The following payment terms shall be applicable:

i. 75% of the bill amount duly recommended by user on receipt of materials / docs. at HPCL shall be paid within 7 days of receipt of bill.

ii. Balance 25% to be paid after verification/ certification within 15 days of receipt of bill. However, the final bill payment will not exceed 30 days.

b. HPCL has taken the initiative to expedite the payment to vendors through e-payment. Hence confirm that you have filled the HPCL bank mandate for e-payment.

c. Payment against invoice shall be made on receipt of equipment/materials at site against submission of following documents along with your Bill/Invoice:-

i. Delivery Challan / Lorry Receipt. ii.
Manufacturer's Test Certificate
iii. Inspection/Clearance report
iv. Manufacturer's Guarantee Certificate
v. Performance Bank Guarantee for 10% Basic Order Value vi.
Any other document specified in the Purchase Order.

d. The financial settlement of Vendor's invoice is liable to be withheld in the event the Vendor has not complied with submission of drawing data and such documentation as called for in the Purchase Order and/or as required otherwise.

e. HPCL will furnish their approved format for bank guarantee/ indemnity bond for all the advance payments directly to vendor along with FOA/ PO, wherever applicable.

f. In case of delayed supplies, bills will be paid after recovering the amount as per price reduction clause of the P.O.

g. All bank guarantees shall be non revocable and from Scheduled / Nationalised Banks other than cooperative banks in India and as per HPCL's proforma.

h. PBG shall be valid till expiry of guarantee period. All other Bank Guarantees shall be valid till contractual completion period, unless otherwise specified. All bank guarantees shall have a claim period of 1(one) month after expiry date of bank guarantee.

## 27. RECOVERY OF SUMS DUE

Whenever any claim against the Vendor for payment of a sum of money arises out of or under the contract, the Corporation shall be entitled to recover such sums from any sum then due or which at any time thereafter may become due from the Vendor under this or any other contract with the Corporation and should this sum be not sufficient to cover the recoverable amount, the Vendor shall pay to the Corporation on demand the balance remaining due.

**28. CHANGES**

The Corporation has the option at any time to make changes in quantities ordered or in specification and drawings. If such changes cause an increase or decrease in the price or in the time required for supply, an equitable adjustment under this provision must be finalised within 10 days from the date when change is ordered.

**29. CANCELLATION / RISK PURCHASE CLAUSE:**

a. The Corporation reserves the right to cancel this purchase order or any part thereof and shall be entitled to rescind the contract wholly or in part with a written notice to the vendor if:

i. The vendor fails to comply with the terms of this purchase order.

ii. The vendor fails to delivery the goods on time and / or replace the rejected goods promptly.

iii. The Vendor becomes bankrupt or goes into liquidation.

iv. The vendor makes a general assignment for the benefit of creditors. v. A

receiver is appointed for any of the property owned by the vendor.

b. Upon receipt of the said cancellation notice, the vendor shall discontinue all work on the Purchase Order and matters connected with it. The vendor is aware that the said goods are required by the Corporation for the ultimate purpose of materials production and that non delivery may cause loss of production and consequently loss of profit to the Corporation.

c. Therefore, in case of Termination of the contract, Corporation shall have the right to carry out the unexecuted portion of the supply/work either by themselves or through any other vendor(s)/contractor(s) at the risk and cost of the vendor/ contractor. In view of paucity of time, Corporation shall have the right to place such unexecuted portion of the supply/work on any nominated vendor(s)/contractor(s). However, the overall liability of the vendor/Contractor shall be restricted to 100% of the total contract value.

d. The provision of this clause shall not prejudice the right of the Corporation from invoking the provisions of clause “Delayed Delivery” as a fore said.

30. **PATENTS AND ROYALTIES**

On acceptance of this order, the Vendor will be deemed to have entirely indemnified the Corporation from any legal action or claims regarding compensation for breach of any patent rights.

**31. PERFORMANCE GUARANTEE**

a. The supplies made against this order shall be fully guaranteed against any manufacturing defects/poor workmanship/inferior quality etc. for a period of 12 months from the date of commissioning or 18 months from the date of supply whichever is earlier. During this period, you will arrange to repair/replace any defective parts free of cost or replace complete set if required. Guarantee Certificate should be submitted along with despatch documents. You will furnish performance Bank Guarantee in favour of HPCL issued by Scheduled bank (other than co-operative banks) for 10% value of the material supplied and valid during the above guarantee period.

® **b. Composite PBG valid upto a period of 3 months beyond the expiry of defect liability period. Demand Draft should be drawn on Scheduled Banks (other than cooperative banks).**

**Quantum of Performance Bank Guarantee inclusive of Security Deposit should be as follows:**

- **All items (other than CVR items) : 10% of PO value**
- **For CVR items: ₹ 10.0 lakhs or 5% of the order value whichever is lower.**

Composite PBG of **above value** towards Performance Bank Guarantee inclusive of Security Deposit shall be accepted (in lieu of deduction of retention money of 10% from each bill); Such composite PBG shall be valid upto a period of 3 months beyond the expiry of defect liability period. Demand Draft should be drawn on Scheduled Banks (other than cooperative banks).

## 32. NON WAIVER

Failure of the Corporation to insist upon any of the terms or conditions incorporated in the Purchase Order or failure or delay to exercise any right or remedies or by law or failure to properly notify Vendor in the event of breach, or the acceptance of, or payment of any goods hereunder or approval of design shall not release the Vendor and shall not be deemed a waiver of any right of the Corporation to insist upon the strict performance thereof or of any of his or their rights or remedies as to any such goods regardless of when goods are shipped, received or accepted nor shall any purported oral modification or revision of the order by the Corporation act as waiver of the terms hereof.

® **REVISION: PROC-003/18-08-2014**

## 33. NON ASSIGNMENT

The Purchase Order shall not be assigned to any other agency by the Vendor without obtaining prior written consent of Corporation.

## 34. PART ORDER/ SPLIT ORDER / REPEAT ORDER

Vendor hereby agrees to accept part orders, split order at Corporation's option without any limitation whatsoever and also accept repeat order up to 100% of each item during a period of 12 months after placement of purchase order at the same unit prices, terms and conditions.

## 35. VENDOR'S DRAWINGS AND DATA REQUIREMENT

The Vendor shall submit drawings, data and documentation in accordance with but not limited to what is specified in the requisition and / or in Vendor drawings and data form attached to the Purchase Order as called for in clause 8, viz, 'Expediting' above. The types, quantities and time limits of submitting this must be respected in its entirety failing which the Purchase Order shall not be deemed to have been executed for all purposes including settlement of payment since the said submission is an integral part of Purchase Order execution.

## 36. TECHNICAL INFORMATION

a. Drawings, specifications & details shall be the property of the Corporation and shall be returned by the Vendor on demand. The Vendor shall not make use of drawing and specifications for any purpose at any time save and except for the purpose of the Corporation.

b. The Vendor shall not disclose the technical information furnished to or gained by the Vendor under or by virtue or as a result of the implementation of this Purchase Order to any person, firm or body or corporate authority and shall make all endeavours to ensure that the technical information is kept CONFIDENTIAL. The technical information imparted and supplied to the Vendor by the Corporation shall at all times remain the absolute Property of the Corporation.

## 37. SERVICES OF VENDOR'S PERSONNEL

Unless otherwise specified in the PO, services of vendor's personnel shall be made within two weeks advance notice and the Vendor shall depute the necessary personnel to site for supervision of erection and start up of the equipment and train a few of the Corporation's personnel for the operation and maintenance of the equipment if required, by the Corporation. The terms and conditions for the services of the Vendor shall be mutually settled.

## 38. VENDOR'S LIABILITY

The Vendor's workmen or employees shall under no circumstances be deemed to be in Corporation's employment and the Vendor shall hold himself responsible for any claim or claims which they or their heirs, dependents, personal representatives may have or make for damages or compensation for anything done or committed to be done in the course of carrying out the work covered by this Purchase Order, whether arising on Corporation

premises or elsewhere and agrees to indemnify the Corporation against any such claim or claims if made against the Corporation and all cost (as between attorney and client) of proceedings, suits or action which the Corporation may incur/sustain in respect of the same. The Vendor shall also procure and keep in force at his own cost comprehensive Automobile Liability insurance for adequate coverage in respect of all his vehicles visiting or plying in project premises. The Vendor shall also be responsible for compliance of existing laws in respect of their workmen and employees. Extent of Liability shall be read in conjunction with clause no. 28 above.

## 39. CORPORATION'S MATERIAL

a. Corporation's material shall be delivered to the Vendor against submission of Bank Guarantee for indemnifying the full value there of strictly in the manner and as per proforma of bank Guarantee approved by the Corporation.

b. Wherever possible the material shall be consigned to Vendor's siding. In the event the Vendor does not have any siding, materials shall be consigned to the Public siding / goods depot to be specifically confirmed by Vendor Loading / Unloading and any handling from the siding / destination shall be arranged by the Vendor at his responsibility and cost.

c. The Vendor shall give a firm and binding list of Corporation issue materials and the desired schedule of its delivery to Shop floor strictly in accordance with the sequence of fabrication vis-à-vis the contract delivery period.

d. Unused material or scrap from material supplied by the Corporation to the Vendor shall be returned by the Vendor to the Corporation or if the Corporation so directs, the Vendor may dispose of the same by sale or otherwise on such terms and conditions as the Corporation may stipulate and the Vendor shall pay to the Corporation the sale proceeds of the material so disposed by sale deducting there from expenses incurred by the Vendor on such sale, the quantum of such deduction to be mutually agreed upon in advance between the Corporation and the Vendor.

## 40. GUARANTEE FOR SPARE PARTS:

a. The seller shall undertake that before going out of production of the spare parts he will give adequate advance notice to the Procurement so that the latter may order his requirements of spares in one lot if so desires .

b. The seller shall further guarantee that if he goes out of production of spare parts , then he will make available blue prints , drawings of spare parts and specification of materials at no extra cost to the Procurement , if and when required in connection with the equipment to enable the procurer to fabricate or procure spare parts from other source.

c. The provision of this clause shall remain effective and binding upon the seller even after the completion or expiry of the order and till the plant / machinery / equipment / instrument supplied under the order is in use by the procurer.

## 41. ARBITRATION

a. All disputes and differences of whatsoever nature, whether existing or which shall at any time arise between the parties hereto touching or concerning the agreement, meaning, operation or effect thereof or to the rights and liabilities of the parties or arising out of or in relation thereto whether during or after completion of the contract or whether before after determination, foreclosure, termination or breach of the agreement

(other than those in respect of which the decision of any person is, by the contract, expressed to be final and binding) shall, after written notice by either party to the agreement to the other of them and to the Appointing Authority hereinafter mentioned, be referred for adjudication to the Sole Arbitrator to be appointed as hereinafter provided.

b. The appointing authority shall either himself act as the Sole Arbitrator or nominate some officer/retired officer of Hindustan Petroleum Corporation Limited (referred to as Corporation or HPCL) or a retired officer of any other Government Company in the Oil Sector of the rank of Ch. Manager & above or any retired officer of the Central Government not below the rank of a Director, to act as the Sole Arbitrator to adjudicate the disputes and differences between the parties. The contractor/vendor shall not be entitled to raise any objection to the appointment of such person as the Sole Arbitrator on the ground that the said person is/was an officer and/or shareholder of the Corporation, another Govt. Company or the Central Government or that he/she has to deal or had dealt with the matter to which the contract relates or that in the course of his/her duties, he/she has/had expressed views on all or any of the matters in dispute or difference.

c. In the event of the Arbitrator to whom the matter is referred to, does not accept the appointment, or is unable or unwilling to act or resigns or vacates his office for any reasons whatsoever, the Appointing Authority aforesaid, shall nominate another person as aforesaid, to act as the Sole Arbitrator.

d. Such another person nominated as the Sole Arbitrator shall be entitled to proceed with the arbitration from the stage at which it was left by his predecessor. It is expressly agreed between the parties that no person other than the Appointing Authority or a person nominated by the Appointing Authority as aforesaid, shall act as an Arbitrator. The failure on the part of the Appointing Authority to make an appointment on time shall only give rise to a right to a Contractor to get such an appointment made and not to have any other person appointed as the Sole Arbitrator.

e. The Award of the Sole Arbitrator shall be final and binding on the parties to the Agreement.

f. The work under the Contract shall, however, continue during the Arbitration proceedings and no payment due or payable to the concerned party shall be withheld (except to the extent disputed) on account of initiation, commencement or pendency of such proceedings.

g. The Arbitrator may give a composite or separate Award(s) in respect of each dispute or difference referred to him and may also make interim award(s) if necessary.

h. The fees of the Arbitrator and expenses of arbitration, if any, shall be borne equally by the parties unless the Sole Arbitrator otherwise directs in his award with reasons. The lumpsum fees of the Arbitrator shall be ₹ 40,000/- per case for transportation contracts and ₹ 60,000/- for engineering contracts and if the sole Arbitrator completes the arbitration including his award within 5 months of accepting his appointment, he shall be paid ₹ 10,000/- additionally as bonus. Reasonable actual expenses for stenographer, etc. will be reimbursed. Fees shall be paid stage wise i.e. 25% on acceptance, 25% on completion of pleadings/documentation, 25% on completion of arguments and balance on receipt of award by the parties.

i. Subject to the aforesaid, the provisions of the # Arbitration and Conciliation Act, 1996 or

any statutory modification or re-enactment thereof and the rules made thereunder, shall apply to the Arbitration proceedings under this Clause.

j. The Contract shall be governed by and constructed according to the laws in force in India. The parties hereby submit to the exclusive jurisdiction of the Courts situated at _____ for all purposes. The Arbitration shall be held at Visakhapatnam and conducted in English language.

k. The Appointing Authority is the Functional Director* of Hindustan Petroleum Corporation Limited.

l. Procurement Authorities may mention, if considered necessary, the proper designation such as Director-Refineries, etc.

42. **JURISDICTION**

The Vendor hereby agrees that the Courts situated in location given in tender header" shall have the jurisdiction to hear and determine all actions and proceedings arising out of this contract.

**CLAUSE**

a. Vendor needs to clarify whether you are registered with NSIC. If registered, vendor needs to submit the following documents along with their offer.

b. Photocopy of the NSIC Registration Certificate, which clearly shows the following details/ information:

   i. Name of the Bidder

   ii. Address of the Bidder

   iii. Validity of the Registration

   iv. Items for which the Bidder is registered

   v. Monetary Limit

   and acknowledged copy of Entrepreneurs Memorandum Part II

c. Also vendor has to clarify whether you have secured Orders for same items, during the preceding 12 months, in competition with Large Scale Units, WITHOUT any Price Preference.

d. In case vendor have secured Orders for same items, during the preceding 12 months, in competition with Large Scale Units, WITHOUT any Price Preference, then vendor has to furnish a Declaration on their Letter Head accordingly.

e. Please note that in the absence of the above information, offer will be evaluated without considering Price Preference.

1.0 **<u>Preference to MSEs</u>**

a. In case the bidder is a Micro or Small Enterprises registered with District Industries Centers or Khadi and Village Industries Commission or Khadi and Village Industries Board or Coir Board or National Small Industries Corporation or Directorate of Handicrafts and Handloom or any other body specified by Ministry of Micro and Small Enterprises, the bidder shall be entitled for following:

   i. Issue of Tender Documents to MSEs free of cost.

ii. Exemption to MSEs from payment of EMD.

iii. Micro and Small Enterprises quoting price within price brand of LI+15% shall also be allowed to supply a portion of requirement by bringing down their prices to LI price in a situation where LI price is from someone other than a micro and small enterprises and such micro and small enterprises shall be allowed to supply upto 20% of the total tendered value. In case of more than one such Micro and Small Enterprises, the supply of 20% portion shall be shared amongst them. Further, out of above 20%, 4% (20% of 20%) shall be from MSEs owned by SC/ST entrepreneurs. This quota is to be transferred to other MSEs in case of non-availability of MSEs owned by SC/ST entrepreneurs.

b. The quoted prices against various items shall remain valid in case of splitting of quantities of the items as above.

c. MSE bidder shall submit the following:

i. Documentary evidence that the bidder is a Micro or Small Enterprises registered with District Industries Centers or Khadi and Village Industries Commission or Khadi and Village Industries Board or Coir Board or National Small Industries Corporation or Directorate of Handicrafts and Handloom or any other body specified by Ministry of Micro, Small and Medium Enterprises.

ii. If the MSE is owned by SC/ST Entrepreneurs, the bidder shall furnish appropriate documentary evidence in this regard.

iii. The above documents submitted by the bidder shall be duly certified by the Statutory Auditor of the bidder or a practicing Chartered Accountant (not being an employee or a Director or not having any interest in the bidder's company/firm) where audited accounts are not mandatory as per law.

d. If the bidder does not provide the appropriate document or any evidence to substantiate the above, then it will be presumed that they do not qualify for any preference admissible in the Public Procurement Policy (PPP), 2012.

43. **VALIDITY OF OFFER**:

Offer shall be valid for 3 months from the due date / extended due date of the tender enquiry.

**44. INTEGRITY PACT:**

All tenders shall comply with the requirements of the Integrity Pact (IP) if the value of such tenders is ₹ 1 crore & above. Failure to sign the Integrity Pact shall lead to outright rejection of bid.

**45. ORDER OF PRECEDENCE**

In case of any discrepancy between the conditions stated in the GPC (which is an integral part of the Order) and those specifically mentioned in the Purchase Order, the later shall prevail over the former.

46. **GENERAL**:

a. Deviations to Terms and Conditions shall lead to loading of prices or make your offer liable for rejection.

b. All resident/non-resident parties to obtain and furnish their PAN in order to avoid tax withholding at a higher rate. Even though the non-residents may not have permanent establishment (PE), branch, local office in India, they can apply with their foreign

address. For your information, the web address for applying for PAN in Form No. 49A to NSDL or UTISL online as given in the following sites:

(AO details for International Taxation are also available online).

i. http://tin.tin.nsdl.com/pan/index.html/
ii. http://incometaxindia.gov.in/
iii. https://incometaxindiaefiling.gov.in/portal/index.jsp
iv. http://www.utitsl.co.in/

c. GRIEVANCE REDRESSAL: There is a grievance redressal mechanism in HPCL for vendors participating in the tender, the details of which are available on HPCL's website www.hindustanpetroleum.com.

d. PBG Format is attached with Chapter-9 ,Annexure-B.

# HINDUSTAN PETROLEUM CORPORATION LIMITED

# VVSPL Capacity Augmentation Project

## (B) GENERAL PURCHASE CONDITIONS FOR IMPORTS

# INDEX

1. DEFINITIONS
2. PRICES
3. PAYMENT TERMS
4. REPEAT ORDER
5. VENDOR'S SALES CONDITIONS
6. IMPORT LICENCE .
7. DELIVERY & DELAYS
8. DELAYS AND NON CONFORMANCE
9. INSPECTION-CHECK- TESTING
10. REVISIONS CHANGES AND CANCELLATION
11. WARRANTEES GUARANTEES
12. NON-ASSIGNMENT
13. PATENTS, VENDOR'S LIABILITY AND COMPLIANCE OF REGULATIONS
14. SUBSTITUTION AND WRONG SUPPLIES
15. ARBITRATION
16. PACKING
17. MARKING
18. SHIPPING
19. DOCUMENTATION
20. SHIPPING ADVICE
21. TECHNICAL INFORMATION
22. ADDRESSES
23. GENERAL

**1.0 . DEFINITION:**

1.1 Purchaser: Purchaser means HPCL having registered office at 17 Jamshedji Tata Road, Mumbai - 400 020. The term purchaser includes successors and assigns of HPCL.

1.2 Owner's CONSULTANT means WorleyParsons India Pvt Limited, having registered office at 5th Floor, Lodha "I Think" Techno campus, off Pokhran road no.2, Thane (W) Maharashtra 400 607

1.3 Vendor: Vendor means the person, firm of corporation to which this purchase order is addressed. The terms Vendor includes its successors and assigns.

1.4 Goods: Goods means the articles, materials, supplies, drawings, data and other property and all services, including design, delivery installation, inspection testing and commissioning specified required to complete this purchase order.

**2.0 PRICES:**

2.1 Firm Price: Vendor shall confirm that quoted prices shall be firm and subject to on escalation whatsoever till completion of order.

2.2 Transit Insurance: Prices Quoted shall exclude transit insurance-charges from F.O.B port of shipment or by Air as the same shall be arranged by the PURCHASER. All transit insurance charges for inland transit upto FOB Port of Shipment or airport should be included by the vendor in their prices.

2.3 Bank Charges/ Stamp Duties/ Taxes:

(i) All Bank Charges and Stamp Duties payable in supplier's country in connection with the payments to be made under this Purchase order shall be borne by the Vendor. All Bank charges and Stamp Duties payable in India shall be borne by the Purchaser

(ii) All taxes, duties and levies of any kind that may be payable upto the stage of putting the material in FOB position shall be borne by the Vendor.

(iii) All taxes and duties payable in India on the materials shall be payable by the Purchaser.

(iv) In case of amendments to LC arising out of supplier requirement / default, all charges shall be borne by Supplier.

**3.0 PAYMENT TERMS:**

1. 100 % (one hundred percent) of the order value of the goods shipped shall be paid through an irrevocable letter of credit established in favour of the seller through a Bank in his country, on submission of shipping document.
2. Shipping document consist of Bill of lading, invoice, packing list, freight memo, country of origin certificate, test certificate, Purchaser / Consultant's inspection release note, drawing catalogue etc as specified in MR.
3. Letter of Credit shall be opened after receipt of unconditional acknowledgement of order and the vendor shall furnish a bank guarantee in the enclosed proforma for 15% order value valid for the warranty period for covering 10% Performance Guarantee and 5% price reduction or Delayed Deliveries.

Note :

1. All bank guarantees shall be non revocable and from Scheduled / Nationalised Banks other than cooperative Banks in India and all Foreign BG will be confirmed by a Bank located in India acceptable to the Owner.

2. PBG shall be valid till expiry of Guarantee period. All other Bank

Guarantee shall be valid till contractual completion period, unless otherwise specified. All Bank Guarantees shall have a claim period of 30 days.

3. PBG shall not be required where total order value is less than Rs. 1 lacs.
4. In case L/C amendment is required due to reasons attributed to the supplier, the charges for the same shall be on Seller's account.

**4.0 REPEAT ORDER:**

For any Items ordered on the Vendor the Purchaser can place repeat orders for any additional quantity not exceeding the quantity of the original purchase order within a period of one year from the date of the original order at the same prices, terms and conditions.

**5.0 VENDOR'S SALES CONDITIONS:**

Vendor's standard sales conditions, If any, shall not be applicable to the offer and only the Purchaser's "General Purchase Conditions" shall apply with the exception deviations specifically agreed between the vendor and the Purchaser and brought out in the Purchase Order.

**6.0 IMPORT LICENCE:**

Vendor is not responsible of Import Licenses under FOB Port of Export or CFR Indian Ports of Entry delivery terms

**7.0 DELIVERY & DELAYS:**

7.1 Contractual Delivery Date: Contractual delivery date is the date in which goods shall be delivered FOB Port of shipment In accordance with purchase order.

7.2 Respect for Delivery Date: Time of Delivery as mentioned In Purchase order shall be the essence of the contract and no variation shall be permitted, except with the prior authorization in writing from the purchaser.

7.3 Price Reduction Schedule for Delayed Delivery:

In the event of Delay on the part of the vendor in effecting deliveries as agreed contractually, it will be at purchaser's discretion to levy a reduction in price for delayed deliveries @ ½ % of total order value per week of delay or part there of subject to a maximum of 5% of the Total Order Value.

7.4 Causes of Force Majeure: Delivery dates will be extended to the Vendor without being subject to clause "Price Reduction Schedule for Delayed Deliveries", in the event of cause of force majeure within the Contractual delivery periods; only the following will be considered causes of force majeure:

Acts of God (like earthquakes, floods, storms, etc.) act of States, the direct and Indirect consequence of Wars (declared or undeclared) hostilities, national emergencies, civil commotions and strikes (only those Vendor's complete factor). The Vendor shall immediately inform the Purchaser by registered and detailed letter supported by documentary proof at the beginning and end of all such Impediments. It Is understood that delivery dates will be extended only for the duration of the above mentioned impediments.

**8.0 DELAYS AND NON-CONFORMANCE:**

In case of Delivery Schedule not being adhered to in progressing the manufacture of

supply the Purchaser has the right to:

(i) Cancel the order wholly or in part-without any liability to Cancellation charges and procure the goods elsewhere, In which case Vendor shall make good the difference between the cost of goods procured elsewhere and price set forth in the order with the Vendor.

(ii) Hire for the period of delay goods meeting the specifications from elsewhere at Vendor's cost.

In the event of rejection of non-conforming goods, the Vendor shall be allowed to correct the non-conformities without extension in delivery period. If vendor fails to do so within the stipulated time, the Purchaser shall have the right to recover actual expenses incurred by Purchaser in installing and removing the non-conforming goods. This shall not prejudice the right of the Purchaser for invoking the provisions of clause 7.3 on price reduction for delayed deliveries as aforesaid.

**9.0 INSPECTION - CHECK -TESTING:**

The materials or workmanship covered by the Purchase Orders are subject to inspection and testing at any time prior to shipment and/or Dispatch and to final inspection within a reasonable time after arrival at site.

The materials shall be subject to INSPECTION by Agencies as mentioned in the requisition and the Vendor shall also bear the expenses concerning preparation and rendering of tests required by such agencies nominated or Boiler Inspectorate or such other Statutory testing agencies or by Lloyds Register of Shipping as may be required.

**10.0 REVISIONS CHANGES AND CANCELLATION :**

The Purchaser may make any revisions or changes in Purchase Order including additions from the quantities ordered. The effect of such changes on prices, delivery period and/or material, other terms and conditions may be settled through mutual agreement. Claim for adjustment must be made within 30 days of revision, cancellation being conveyed to the Vendor.

The Purchaser may terminate the order at any time if the Vendor does not adhere to or all agreed terms and conditions. In such case the Purchaser has the option to buy complete or incomplete components with or without verification/Inspection at mutually agreed prices

However cancellation of PO will be done after agreeing mutually.

**11.0 WARRANTEES/GUARANTEES:**

The Vendor shall warrant that the goods shall give required operational performance, shall be suitable for the service intended and be of the Quality or the best grade in case no quality is specified.

The goods shall be guaranteed against any defects in design, materials, workmanship and performance for a period of 18 months from the date of shipment or 12 months from the date of commissioning whichever is earlier.

Should any defects develop within the Guarantee/Warrantee period, the same shall be

remedied or the goods shall be replaced free of charge. All expenses incurred including those on transportation, shall be borne by the Vendor.

## 12.0 NON-ASSIGNMENT:

Any assignment of this Purchase Order or of any of the rights hereunder In any manner or under any certificates by operation of the law or otherwise shall be void without prior written consent at the Purchaser.

## 13.0 PATENTS, VENDOR'S LIABILITY AND COMPLIANCE OF REGULATIONS:

Vendor shall protect and fully indemnify the purchaser from any claims for infringement of patents, copy right, trade make or the like.

Vendor shall also protect and fully indemnify the Purchaser from any claims from Vendor's Work men employees, their heirs, dependents, representatives etc. or from any other person/persons or bodies/companies etc. for any act of commission or omission while executing the order.

Vendor shall be responsible for compliance with all requirements under the laws and shall protect and indemnify completely the Purchaser from any claim/ penalties arising out of any infringements.

## 14.0 SUBSTITUTION AND WRONG SUPPLIES

Unauthorised substitution or materials delivered in error or of wrong description or quality or supplied in excess quantity or rejected goods shall be returned to the Vendor at the Vendors cost and risk.

## 15.0 ARBITRATION:

1. Disputes or difference arising out of or in relation to this agreement shall be settled by Arbitration in India. The arbitration shall be by a Sole Arbitrator appointed by HPCL. The Sole Arbitrator will adjudicate the disputes and differences between the parties except those in respect of which the decision of any person is by the agreement expressed to be final and binding.

2. In the event of the Sole Arbitrator to whom the matter is originally referred to, is unable to act or he/she vacates the office, HPCL, shall nominate another Sole Arbitrator to settle the said disputes and differences.

3. The second Sole Arbitrator shall be entitled to proceed with the arbitration from the stage at which it was left by his/her predecessor.

4. The award of the arbitrator shall be final, conclusive and binding on all the parties to the agreement subject to the provisions of the # *Arbitration & Conciliation Act, 1996*, as in force in India and the rules made thereunder and for the time being in force. This agreement shall be covered by the laws of India.

5. The award shall be made in writing and shall be published by the Sole Arbitrator within six months after entering upon reference or within such further time mutually extended by the parties. The Sole Arbitrator shall have power to order and direct the parties to abide by, observe and perform such directions as the Sole Arbitrator may think fit and proper to issue having regard to the fact that the arbitration proceedings have to be completed within the specified period solely on the principles of Natural Justice.

6. The Sole Arbitrator shall be at liberty to appoint, if so necessary, any Accountant or Engineer or other person to assist him/her and act by the opinion so taken.

7. The Sole Arbitrator shall have powers to make one or more awards whether interim or otherwise in respect of the disputes and differences, and in particular, shall make separate awards in respect of each claim or cross claim of the parties.

8. The Sole Arbitrator shall be entitled to direct any of the parties to pay the cost of arbitration in such a manner and to such an extent as the Sole Arbitrator may in his discretion determine and shall also be entitled to require one or both the parties to deposit funds in such proportions to meet the arbitration expenses. The parties to arbitration, whenever called upon to do so shall be bound to comply with such directions without any demur.

9. Notwithstanding anything contained to any other law, the parties hereby agree that the courts in the city of _____ (say Bombay) alone shall have jurisdiction in respect of all or anything arising under this agreement and any award(s) made by the Sole Arbitrator hereunder shall be filed in the court in the city of _____ (say Bombay _____) only.

**16.0 PACKING:**

16.1 Packing should be capable to withstand rough sea weather for a minimum period of 4 to 6 months and should be commensurate with best commercial export practices. AII packaging shall be done in such a manner as to reduce volume as much as possible. Fragile articles should be adequately packed with special packing materials depending on type of materials.

16.2 All delicate surfaces on equipment material should be carefully protected and painted with protective paint compound and wrapped to prevent rusting and damage.

16.3 All mechanical and electrical equipment and other heavy articles should be securely fastened to the bottom of the case and shall be blocked and braced to prevent movement.

16.4 Attachments and spare parts of equipments and all small pieces shall be packed separately in wooden Cases with adequate protection inside the case and wherever possible should be sent along with the main equipment. Each item shall be tagged so as to identify it with the main equipment and part number and reference number shall be indicated.

16.5 All protrusions shall be suitably protected and opening shall be blocked by wooden covers.

16.6 Wherever required equipment/materials shall be packed in polyethylene bags and silicagel or similar dehydrating compound shall be put inside the bags to protect them.

16.7 Pipes/ tubes made of stainless steel, copper etc. shall be packed in wooden cases Irrespective of sizes.

16.8 The supplier shall be held liable *for* all damages or breakages to the goods due-to the defective or insufficient packing as well as *for* corrosion due to insufficient packing.

16.9 Detailed packing list in water proof envelope shall be inserted in each package together

with equipment/materials. One copy of “Detailed Packing List", shall be fastened outside of the package in water proof envelope and covered by metal cover.

**17.0 MARKING:**

17.1 Each package shall be marked on three sides, with proper paint/indelible water proof inks as follows:

HINDUSTAN PETROLEUM CORPORATION LTD. ,VVSPL PROJECT
PURCHASE ORDER NO ..... ……
NET WEIGHT …… KGS.GR. WT …… KGS
DIMENSIONS.....X…….....X..... CMS
PACKAGE NO. (SI. No. of total packages)
TAG/ITEM NO .....…….....
COUNTRY OF ORIGIN .....
SHIPPER'S NAME ..... .....

17.2 Additional marking such as 'handle with care' 'this side up' 'fragile' or any other additional Indications for protection and safe handling shall be added depending on the type of materials. All cases will have warning signs on the outside denoting 'Centre of Gravity' and 'Sling Mark'.

17.3 Letters, figures, marks etc. used *for* marking shall be stenciled printed. Handwriting should be avoided as far as possible. Size of letter shall be optimum for each package dimensions.

17.4. In case of Bundle or other packages wherever marking cannot be stenciled the same shall be embossed on metal or similar tag and Wired securely at minimum two convenient points.

**18.0 SHIPPING**:

18.1 The shipping arrangement will be made in consultation with the Secretary, Shipping Co-ordination committee. Ministry of Shipping and Transport (cable Transport, New Delhi. Telex Vahan ND 2312) through their forwarding agent as under to whom notice of no less six weeks about the readiness of each cargo for shipment should be given for finalizing the shipping arrangements. . .

"Shipping arrangements will be made by the shipping Co-ordination and Chartering Division, Ministry of shipping and Transport, New Delhi through their respective, Forwarding Agents Nominees as mentioned below to whom adequate notice of not less than six weeks/about the readiness of cargo for shipment should be given *by* the sellers from time to time for final/sing the shipping arrangements.

**Area Forwarding Agents/Nominee**

Shall be provided by HPCL

18.2 All shipment of materials shall be made by direct vessels.
All shipments of shall be under deck unless carriage on deck is unavoidable.

**19.0 DOCUMENTATION**

19.1 The documents shall be in English Language.

19.2 Documents required before shipment:

Seventy five (75) days before the contractual delivery date, proforma, packing lists and sketches of over dimensioned cargo shall be air mailed as follows:

| | |
|---|---|
| H.P.C.L.( (Address as applicable) | 2 COPIES |
| Consultant HQO | 2 COPIES |
| Consultant Site Office | 2 COPIES |
| HPCL Site Office | 2 COPIES |

The over dimension cargo shall mean any package exceeding any of the following limits

| | |
|---|---|
| Weight | 20 MT |
| Length | 13.719 Meters |
| Width | 2.997 Meters |
| Height | 2.743 Meters |

19.3 Documents required after shipment:

The supplier shall air-mail the shipping documents stated here in below as quickly as possible after the shipment has been made so that the same are received at least two weeks prior to the arrival of vessel at destination port. The supplier shall be fully responsible for *any* delay and/or demurrage that may become payable at destination port on account of delay transmittal of shipping documents.

| Copy of Documents ND | HPCL SITE | HPCL HQO | Consultant SITE | Consultant HQO |
|---|---|---|---|---|
| (a) Bill of lading | 4 | 2 | 2 | 2 |
| (b) Commercial Invoice | 4 | 2 | 2 | 4 |
| (c) Detailed Packing list | 4 | 2 | 2 | 4 |
| (d) Freight Memo | 2 | 2 | 2 | 2 |
| (e) Test Certificate | 2 | 2 | 2 | 2 |
| (f) Certificated of Origin | 2 | 2 | 2 | - |
| (g) Certificate of Measurement & Weight | 2 | 2 | 2 | 2 |
| (h) Catalogue and/or drawing | 1 | 1 | 1 | 1 |
| (i) Payment Certificate (Amount received by vendor) | 2 | 2 | 2 | 2 |

Note: In addition to above, complete set of documents are required to be sent to (Purchaser) through bank in terms of Letter of Credit

19.4 Bill of lading:

Bill of Lading shall be 'Clean on Board', Ocean Bill of Lading should be made In favour of HPCL, VVSPL PROJECT order and the notify column should Indicate HPCL

Commercial Invoice:

Commercial Invoice shall, inter alia indicate (i) Purchase Order No. (ii) Import License Policy numbers and (iii) Country of Origin. Besides, the cases in the voice shall be in conformity with order.

19.5 Packing List:

Packing List must show apart from other particulars actual contents in each case, net and gross weights and dimensions and the total numbers of packages. Packing List shall

be submitted in English Language only.

## 20.0 SHIPPING ADVICE:

Within 24 hours after shipment, the supplier shall send shipping advice giving Particulars of the shipment, Vessel's Name, Port of shipment, Bill of Lading number and date, contents in brief, Purchase Order number, Total F.O.B. and Freight Values, number of packages and total gross weight by way of Fax / Telex to :

DGM – VVSPL PROJECT
Hindustan Petroleum Corporation Limited
(Address as applicable)

## 21.0 TECHNICAL INFORMATION:

Drawings, specifications, and details shall be the property of the purchaser and shall be returned by the vendor on demand. The vendor shall not make use of drawings and specifications for *any* purpose at *any* time save and except for the purpose of the purchaser. The vendor shall not disclose the technical information. furnished to or gained by the vendor under or by virtue of or as a result of the implementation of this purchase order to *any* person, firm or body or Corporate authority and shall make all endeavors to ensure that technical information is kept CONFIDENTIAL. The technical information imparted and supplied to the vendor by the Purchaser shall at all times remain the absolute property of purchaser.

## 22.0 ADDRESS:

1. DGM – VVSPL PROJECT
   Hindustan Petroleum Corporation Limited
   (Address as applicable)

2. Project Manager –VVSPL Project
   WorleyParsons India Private Ltd.
   B Wing, 5th Floor, Lodha " I Think" techno campus
   Off Pokhran road no. 2, Thane (W), Maharsahtra 400607, India.

## 23.0 GENERAL:

1. EFFECT AND VALIDITY OF OFFER:

The submission of any bid with connected documents and specification contained under's request for quotation shall constitute a bid and the vendor shall have no cause for action or claim against the consultant / purchaser for rejection of his Bid. The consultant / purchaser shall always be at liberty to accept or reject any or all bids at their sole discretion and any such action will not be called into question and the vendor shall have no claim in this regard against consultant / purchaser

The bid should be kept valid for acceptance for a period of 3 months from the bid due date or any extended due date as the case may be.

2. PART ORDER:

Seller hereby agrees to accept part orders at owner's option without any limitation

whatsoever however individual quantity will not be split unless otherwise specified. All lump sum charges quoted by the vendor will be calculated on pro rata basis in case of part order.

3. WEIGHTS & MEASUREMENT:

All weights and measurement recorded by the purchaser on receipt of goods at site shall be treated as final for Indian Bidders and at the FOB Port of Export point for Foreign Bidders.

4. SELLERS DRAWING & DATA REQUIREMENT:

The submission by the seller to the consultant / purchaser of drawing, data and documentation is an integral part of the order. The quantities and time limit for submitting these documents by the seller are specified in the attachment. These quantities and the time limits must be respected, failing which the order will not be deemed to have been duly executed.

## SPECIAL PACKAGING REQUIREMENT

*"All raw/solid wood packaging material used for packaging shall be appropriately treated and marked as per ISPM-15 (International Standards of Phyto-sanitary measures 15) OR shall be accompanied by a Phytosanitary Certificate with the treatment endorsed.*

*The treatment of raw/solid wood packaging material prior to export shall include either Methyl Bromide (MB) @ 48 g/m3 for 16 hrs at 21° C and above or any equivalent thereof or heat treatment (HT) at 56° C for 30 min (core temperature of wood) or Kiln Drying (KD) or Chemical Pressure Impregnation (CPI) or any other treatments provided that these meet the HT specifications of the ISPM-15.*

*However, the above conditions shall not be applicable to wood packaging material wholly made of processed wood products such as ply wood, particle board, oriental strand board of veneer that have been created using glue, heat and pressure or combination thereof. The above conditions shall also not be applicable to wood packaging material such as veneer peeler cores, wood wool & shavings and thin wood pieces (less than 6mm thickness) unless they are found to be harboring any pests."*

# Chapter 5

A Terms and conditions for Supervision of Installation, Testing and Commissioning
B Terms and conditions for Training
C Terms & Conditions for Annual Maintenance Charges

## A) Terms & Conditions for Supervision of Installation/Erection, Testing & Commissioning

1) Bidder shall quote per diem charges of Supervision for 15 man-days per Pump package which shall include lodging, boarding, medical, local transport, all insurances, income/corporate/service tax (as may be applicable) and all other incidental charges but excluding to and fro Air/Rail fare.

2) The present Service Tax rate is 15%. The same shall be considered by the bidders while quoting for the per diem charges for supervision. Any variation in the service tax rate within contractual completion period shall be borne by Purchaser and variation beyond contractual completion date shall be borne by Bidder. Bidder to note that tax deposited at source under Income Tax Act 1961 (withholding tax) shall be borne by bidder.

3) a. <u>For Foreign Bidders:</u>

   To and fro air fare to the nearest airport by economy class and from airport to the site by AC-2 Tier and Taxi fare will be reimbursed at actuals.

   b. <u>For Domestic Bidders:</u>

   To and fro air fare to the nearest airport by economy class and from airport to the site by AC-2 Tier and Taxi fare will be reimbursed at actuals.

4) No payment will be made for travel days/period.

5) Bidder will be responsible for all liabilities towards corporate tax, personal income tax and service tax (as may be applicable) for their personnel deputed for the supervision job. Any variation (s), including statutory, shall be to Vendor's account and the Owner shall not be liable for the same. Such tax(s) shall be deducted at source by Owner while making payments against each invoice.

6) Working hours prevailing at site, normally 8 hours/day – Monday through Saturday and holidays as applicable to Owner's site personnel shall apply.

7) Vendor's supervisory personnel to observe/abide by the working conditions, safety codes & Indian Laws.

8) Vendor's personnel shall be required to reach site within 15 days from the date of intimation by HPCL/ WorleyParsons India Pvt. Ltd. for the supervision.

9) Bidder to quote per diem rate considering the above provisions in e-portal of HPCL and for detail refer preamble to price Schedule. The Unpriced price Schedule (submitted along with Unpriced bid with prices blanked out) should contain the words 'Quoted' or 'Not quoted' or "Not Applicable" against each item.

10) The successful bidder shall be paid for actual number of days spent for installation & commissioning OR number of man-days quoted for installation & commissioning WHICHEVER IS LOWER.

    However, for evaluation of bids, supervision charges shall be added to the rates quoted against supply items. The supervision charges per item shall be calculated as follows –

| | | | | |
|---|---|---|---|---|
| Supervision charges | = | No. of Man-days quoted by the bidder | X | Per Diem rate quoted for per Pump Package by bidder |

## B) Training

1. Bidder to quote per diem rate for providing training to 10 engineers for 5 days as per Clause No.6 of SCP , in e-portal of HPCL and for detail refer preamble to price Schedule.

2. The present service tax rate is 15%. The same shall be considered by the bidders while quoting for the per diem charges for training. Any variation in the service tax rate within contractual completion period shall be borne by Purchaser and variation beyond contractual completion date shall be borne by Bidder. Bidder to note that tax deposited at source under Income Tax Act 1961 (withholding tax) shall be borne by bidder

3. The Unpriced price Schedule (submitted along with Unpriced bid with prices blanked out) should contain the words ‘Quoted’ or ‘Not quoted’ or “Not Applicable” against each item.

4. The Unpriced price Schedule (submitted along with Unpriced bid with prices blanked out) should contain the words ‘Quoted’ or ‘Not quoted’ or “Not Applicable” against each item.

## C) Annual Maintenance Charges

1. Bidder shall quote for annual maintenance charges on Lumpsum basis for three consecutive years, starting just after expiry of Guarantee/ defect Liability Period of each item.

2. Quoted Lumpsum charges shall be inclusive of all expenses of Vendor's personnel viz. to and for traveling expenses (air fare /train /taxi) up to location(s), boarding, lodging, medical,tools/tackles, inspection, analysis and working for the job etc. except the spares required, if any.

3. The order for AMC may be placed after the expiry of the contractual Guarantee/ defect Liability Period . However the quoted Lumpsum rates for AMC will remain valid for three months after the expiry of Guarantee/ defect Liability Period.

4. 100% payment towards Annual Maintenance shall be made at the end of the quarter of the contractual year. The payment for AMC shall be made against invoices of vendor based on actual visit of the vendor as per requirements of HPCL.

5. The date of each routine visit shall be finalized in consultation with M/S. HPCL.

6. The Lumpsum charges quoted shall be inclusive of all insurances including third party insurance, income tax, and all other incidental charges. Owner will not have any liability, whatsoever, over and above the quoted as worked out based on Lumpsum basis.

7. The present service tax rate is 15%. The same shall be considered by the bidders while quoting the Lumpsum charges per year for three Consecutive years. Any variation in the service tax rate within contractual completion period shall be borne by Purchaser

and variation beyond contractual completion date shall be borne by Bidder. Bidder to note that tax deposited at source under Income Tax Act 1961 (withholding tax) shall be borne by bidder

8. Vendor to comply with all the statutory regulations, safety regulations and the directions of Engineer-In-Charge.

9. Owner will arrange the spare parts, lifting arrangements, tools and tackles.

10. Bidder to quote on Lumpsum basis per consecutive year i.e. 1st year, 2nd year, 3rd year AMC as per Clause No. 7 of SCP, in e-portal of HPCL and for detail refer preamble to price Schedule. The Unpriced price Schedule (submitted along with Unpriced bid with prices blanked out) should contain the words 'Quoted' or 'Not quoted' or "Not Applicable" against each item.

# Chapter - 6

## Bid Form & Price Schedule Formats

**BID FORM**

**To:** (Name and address of Owner/Consultant) Date:

Gentlemen,

Having examined the Conditions of Contract and Specifications of tender document including Addendum(s) / Corrigendum(s) in respect of **Procurement of Mainline Pumps** the receipt of which is hereby duly acknowledged, we the undersigned, offer to supply and delivery (Description of Goods and Services) in conformity with the said Drawings, Conditions of Contract and specifications for the same (total bid amount in words and figures) or such other sums as may be ascertained in accordance with the Schedule of Prices attached herewith and made part of this bid.

We undertake if our bid is accepted, complete delivery as agreed and specified in the IFB / e-tender document. If our bid is accepted we will obtain the guarantee of a Bank in a sum not exceeding (10) % of the Contract price for the due performance of the Contract.

We agree to abide by this bid for a period of **120 days** from the date fixed for bid opening under Instructions to Bidders and it shall remain binding upon us and may be accepted at any time before the expiration of that period.

Until a formal contract is prepared and executed, this bid, together with your written acceptance thereof in your notification of award LOA (Letter of Acceptance) shall constitute a binding Contract between us.

We understand that you are not bound to accept the lowest or any bid, you may receive.
Dated this Day of

Signature

……

In the capacity of duly authorized to sign bid for an on behalf of

Witness

Address

Signature

**Note : To be submitted on letter head of company.**

REFER PRICE SCHEDULE UPLOADED ON HPCL E-TENDER PORTAL: **https://etender.hpcl.co.in**

Format to fill details of Built-In-CIF, Import Content & Custom Duty is attached herewith:

**Bid Document No. : 16000017-HD-11994**
**Item: Mainline Centrifugal Pumps**
**Name of Bidder :**

## PREAMBLE TO PRICE SCHEDULE FOR DOMESTIC(INDIAN) BIDDERS PRICE BASED ON MERIT RATE OF CUSTOMS DUTY

| *S.No.* | *Description* | *Unit* | *Quantity* | *Rate* | *Amount* |
|---|---|---|---|---|---|
| | ***Schedule 1*** | | | | |
| ***1*** | **Supply of Mainline pumps for VDS** Design, Engineering, Procurement of bought out items, Supply, Manufacturing, Fabrication, Assembly, Painting, Inspection, Testing, Packing and Forwarding and Delivery of Mainline Centrifugal pumps including mandatory spares, Pre-commissioning / commissioning spares for VVSPL Capacity Augmentation project (As per scope of supply and works mentioned in the tender document for **tag no.s 10-PA-CF-104**) | Set | 1 | Please do not quote Rate here. Bidder to mention Prices only in E-procurement website of HPCL | Please do not quote Rate here. Bidder to mention Prices only in E-procurement website of HPCL |
| ***2*** | Supervision for Installation/commissioning of items specified at Sr.no.1 ,Tag No.10-PA-CF-104 , as per enclosed instructions to vendor in MR | Man Day | 15 | | |
| ***3*** | Training of items specified at Sr.no.1, Tag No.10-PA-CF-104 , as per enclosed instructions to vendor in MR | Man Day | 5 | | |
| ***4*** | **Supply of Mainline pumps for RBS** Design, Engineering, Procurement of bought out items, Supply, Manufacturing, Fabrication, Assembly, Painting, Inspection, Testing, Packing and Forwarding and Delivery of Mainline Centrifugal pumps including mandatory spares, Pre-commissioning / commissioning spares for VVSPL Capacity Augmentation project (As per scope of supply and works mentioned in the tender document for **tag no.s 20-PA-CF-103**) | Set | 1 | | |
| ***5*** | Supervision for Installation / commissioning of items specified at Sr.no.4 ,Tag No.20-PA-CF-103, as per enclosed instructions to vendor in MR | Man Day | 15 | | |
| ***6*** | Training of items specified at Sr.no.4 ,Tag No.20-PA-CF-103, as per enclosed instructions to vendor in MR | Man Day | 5 | | |
| ***7*** | **Supply of Mainline pumps for VBS** Design, Engineering, Procurement of bought out items, Supply, Manufacturing, Fabrication, Assembly, Painting, Inspection, Testing, Packing and Forwarding and Delivery of Mainline Centrifugal pumps including mandatory spares, Pre-commissioning / commissioning spares for VVSPL Capacity Augmentation project (As per scope of supply and works mentioned in the tender document for **tag no.s 30-PA-CF-101 D**) | Set | 1 | | |
| ***8*** | Supervision for Installation / commissioning of items specified at Sr.no.7 ,Tag No. 30-PA-CF-101 D , as per enclosed instructions to vendor in MR | Man Day | 15 | | |

| S.No. | Description | Unit | Quantity | Rate | Amount |
|---|---|---|---|---|---|
| 9 | Training of items specified at Sr.no. 7 ,Tag No. 30-PA-CF-101 D , as per enclosed instructions to vendor in MR | Man Day | 5 | Please do not quote Rate here. Bidder to mention Prices only in E-procurement website of HPCL | Please do not quote Rate here. Bidder to mention Prices only in E-procurement website of HPCL |
| 10 | **Supply of VFD for existing Mainline pump at VBS** Design, Engineering, Procurement of bought out items, Supply, Manufacturing, Fabrication, Assembly, Painting, Inspection, Testing, Packing and Forwarding and Delivery of VFD including mandatory spares, Pre-commissioning / commissioning spares for VVSPL Capacity Augmentation project (As per scope of supply and works mentioned in the tender document for **existing Main line pump tag no. 30-PA-CF-101 A (900kW)**) | EA | 1 | | |
| 11 | Supervision for Installation / commissioning of items specified at Sr.no. 10, VFD for Tag No : 30-PA-CF-101 A (900kW) , as per enclosed instructions to vendor in MR | Man Day | 5 | | |
| 12 | Training of items specified at Sr.no.10, VFD for Tag No : 30-PA-CF-101 A (900kW) , as per enclosed instructions to vendor in MR | Man Day | 2 | | |
| 13 | Annual Maintenance Charges for First year of operation after warranty period (1st year) of items specified at Sr.no.1 Tag No : 10-PA-CF-104 , Sr.no.4 Tag No : 20-PA-CF-103 , Sr.no.7 Tag No : 30-PA-CF-101 D , Sr.no.10 VFD for Tag No : 30-PA-CF- 101 A (900kW) as per enclosed instructions to vendor in MR | Lumpsum | 1 | | |
| 14 | Annual Maintenance Charges for Second year of operation after warranty period (2nd year) of items specified at Sr.no.1 Tag No : 10-PA-CF-104 , Sr.no.4 Tag No : 20-PA-CF-103 , Sr.no.7 Tag No : 30-PA-CF-101 D , Sr.no.10 VFD for Tag No : 30-PA-CF- 101 A (900kW) as per enclosed instructions to vendor in MR | Lumpsum | 1 | | |
| 15 | Annual Maintenance Charges for Third year of operation after warranty period (3rd year) specified of items specified at Sr.no.1 Tag No : 10-PA-CF-104 , Sr.no.4 Tag No : 20-PA-CF-103 , Sr.no.7 Tag No : 30-PA-CF-101 D , Sr.no.10 VFD for Tag No : 30-PA-CF- 101 A (900kW) as per enclosed instructions to vendor in MR | Lumpsum | 1 | | |
| 16 | Recommended spares for two years operation and maintenance, Tag No : 10-PA-CF-104 | Set | 1 | | |
| 17 | Recommended spares for two years operation and maintenance, Tag No : 20-PA-CF-103 | Set | 1 | | |
| 18 | Recommended spares for two years operation and maintenance, Tag No. 30-PA-CF-101 D | Set | 1 | | |
| 19 | Recommended spares for two years operation and maintenance, Tag No : 30-PA-CF-101 A (900kW) | Set | 1 | | |
| | **Schedule 1 Total** | | | | |

| S.No. | Description | Unit | Quantity | Rate | Amount |
|---|---|---|---|---|---|
| | ***Schedule 2*** | | | | |
| ***20*** | **Supply of Mainline pumps for IPS 1** Design, Engineering, Procurement of bought out items, Supply, Manufacturing, Fabrication, Assembly, Painting, Inspection, Testing, Packing and Forwarding and Delivery of Mainline Centrifugal pumps including mandatory spares, Pre-commissioning / commissioning spares for VVSPL Capacity Augmentation project (As per scope of supply and works mentioned in the tender document for **tag no.s 15-PA-CF-101 A/B/C**) | Set | 3 | Please do not quote Rate here. Bidder to mention Prices only in E-procurement website of HPCL | Please do not quote Rate here. Bidder to mention Prices only in E-procurement website of HPCL |
| ***21*** | Supervision for Installation/commissioning of items specified at Sr.no. 20, Tag No.15-PA-CF-101 A/B/C , as per enclosed instructions to vendor in MR | Man Day | 15 | | |
| ***22*** | Training of items specified at Sr.no.20, Tag No.15-PA-CF-101 A/B/C , as per enclosed instructions to vendor in MR | Man Day | 5 | | |
| ***23*** | Annual Maintenance Charges for First year of operation after warranty period (1st year) of Items Specified at Sr.no 20 , Tag No. 15-PA-CF-101 A/B/C as per enclosed instructions to vendor in MR | Lumpsum | 1 | | |
| ***24*** | Annual Maintenance Charges for Second year of operation after warranty period (2nd year) of Items Specified at Sr.no 20 , Tag No. 15-PA-CF-101 A/B/C as per enclosed instructions to vendor in MR | Lumpsum | 1 | | |
| ***25*** | Annual Maintenance Charges for Third year of operation after warranty period (3rd year) of Items Specified at Sr.no 20 , Tag No. 15-PA-CF-101 A/B/C as per enclosed instructions to vendor in MR | Lumpsum | 1 | | |
| ***26*** | Recommended spares for two years operation and maintenance, Tag No :Tag No.15-PA-CF-101 A/B/C | Set | 1 | | |
| | **Schedule 2 Total** | | | | |

| S.No. | Description | Unit | Quantity | Rate | Amount |
|---|---|---|---|---|---|
| | ***Schedule 3*** | | | | |
| ***27*** | **Supply of Mainline pumps for IPS 2** Design, Engineering, Procurement of bought out items, Supply, Manufacturing, Fabrication, Assembly, Painting, Inspection, Testing, Packing and Forwarding and Delivery of Mainline Centrifugal pumps including mandatory spares, Pre-commissioning / commissioning spares for VVSPL Capacity Augmentation project (As per scope of supply and works mentioned in the tender document for **tag no.s 25-PA-CF-101 A/B/C**) | Set | 3 | Please do not quote Rate here. Bidder to mention Prices only in E-procurement website of HPCL. | Please do not quote Rate here. Bidder to mention Prices only in E-procurement website of HPCL |
| ***28*** | Supervision for Installation/commissioning of items specified at Sr.no.27, Tag No. 25-PA-CF-101 A/B/C , as per enclosed instructions to vendor in MR | Man Day | 15 | | |
| ***29*** | Training of items specified at Sr.no.27, Tag No. 25-PA-CF-101 A/B/C, as per enclosed instructions to vendor in MR | Man Day | 5 | | |
| ***30*** | Annual Maintenance Charges for First year of operation after warranty period (1st year) of Items Specified at Sr.no 27, Tag No. 25-PA-CF-101 A/B/C as per enclosed instructions to vendor in MR | Lumpsum | 1 | | |
| ***31*** | Annual Maintenance Charges for Second year of operation after warranty period (2nd year) of Items Specified at Sr.no 27, Tag No. 25-PA-CF-101 A/B/C as per enclosed instructions to vendor in MR | Lumpsum | 1 | | |
| ***32*** | Annual Maintenance Charges for Third year of operation after warranty period (3rd year) of Items Specified at Sr.no 27, Tag No. 25-PA-CF-101 A/B/C as per enclosed instructions to vendor in MR | Lumpsum | 1 | | |
| ***33*** | Recommended spares for two years operation and maintenance, Tag No. 25-PA-CF-101 A/B/C | Set | 1 | | |
| | **Schedule 3 Total** | | | | |

| S.No. | Description | Unit | Quantity | Rate | Amount |
|---|---|---|---|---|---|
| | ***Schedule 4*** | | | | |
| ***34*** | **Supply of Mainline pumps for IPS 3** Design, Engineering, Procurement of bought out items, Supply, Manufacturing, Fabrication, Assembly, Painting, Inspection, Testing, Packing and Forwarding and Delivery of Mainline Centrifugal pumps including mandatory spares, Pre-commissioning / commissioning spares for VVSPL Capacity Augmentation project (As per scope of supply and works mentioned in the tender document for **tag no.s 45-PA-CF-101 A/B**) | Set | 2 | Please do not quote Rate here. Bidder to mention Prices only in E-procurement website of HPCL. | Please do not quote Rate here. Bidder to mention Prices only in E-procurement website of HPCL. |
| ***35*** | Supervision for Installation/commissioning of items specified at Sr.no.34, Tag No : 45-PA-CF-101 A/B, as per enclosed instructions to vendor in MR | Man Day | 15 | | |
| ***36*** | Training of items specified at Sr.no.34, Tag No : 45-PA-CF-101 A/B, as per enclosed instructions to vendor in MR | Man Day | 5 | | |
| ***37*** | Annual Maintenance Charges for First year of operation after warranty period (1st year) of Items Specified at Sr.no. 34, Tag No. 45-PA-CF-101 A/B as per enclosed instructions to vendor in MR | Lumpsum | 1 | | |
| ***38*** | Annual Maintenance Charges for Second year of operation after warranty period (2nd year) of Items Specified at Sr.no. 34, Tag No. 45-PA-CF-101 A/B as per enclosed instructions to vendor in MR | Lumpsum | 1 | | |
| ***39*** | Annual Maintenance Charges for Third year of operation after warranty period (3rd year) of Items Specified at Sr.no. 34, Tag No. 45-PA-CF-101 A/B as per enclosed instructions to vendor in MR | Lumpsum | 1 | | |
| ***40*** | Recommended spares for two years operation and maintenance, Tag No. 45-PA-CF-101 A/B | Set | 1 | | |
| | **Schedule 4 Total** | | | | |

]

| S.No. | Description | Unit | Quantity | Rate | Amount |
|---|---|---|---|---|---|
| | ***Schedule 5*** | | | | |
| ***41*** | **Supply of Mainline pumps for SBS** Design, Engineering, Procurement of bought out items, Supply, Manufacturing, Fabrication, Assembly, Painting, Inspection, Testing, Packing and Forwarding and Delivery of Mainline Centrifugal pumps including mandatory spares, Pre-commissioning / commissioning spares for VVSPL Capacity Augmentation project (As per scope of supply and works mentioned in the tender document for **tag no.s 40-PA-CF-102 A/B**) | Set | 2 | Please do not quote Rate here. Bidder to mention Prices only in E-procurement website of HPCL. | Please do not quote Rate here. Bidder to mention Prices only in E-procurement website of HPCL. |
| ***42*** | Supervision for Installation/commissioning of items specified at Sr.no.41, Tag No.40-PA-CF-102 A/B , as per enclosed instructions to vendor in MR | Man Day | 15 | | |
| ***43*** | Training of items specified at Sr.no.41, Tag No.40-PA-CF-102 A/B , as per enclosed instructions to vendor in MR | Man Day | 5 | | |
| ***44*** | Annual Maintenance Charges for First year of operation after warranty period (1st year) of Items Specified at Sr.no. 41, Tag No. 40-PA-CF-102 A/B as per enclosed instructions to vendor in MR | Lumpsum | 1 | | |
| ***45*** | Annual Maintenance Charges for Second year of operation after warranty period (2nd year) of Items Specified at Sr.no. 41, Tag No. 40-PA-CF-102 A/B as per enclosed instructions to vendor in MR | Lumpsum | 1 | | |
| ***46*** | Annual Maintenance Charges for Third year of operation after warranty period (3rd year) of Items Specified at Sr.no. 41, Tag No. 40-PA-CF-102 A/B as per enclosed instructions to vendor in MR | Lumpsum | 1 | | |
| ***47*** | Recommended spares for two years operation and maintenance, Tag No. 40-PA-CF-102 A/B | Set | 1 | | |
| | **Schedule 5 Total** | | | | |

| Sr. No. | Notes for Indian Bidders:- |
|---|---|
| 1 | Scope of supply including testing, inspection, documentation etc. shall be strictly as per Material Requisition and other documents which are part of IFB. Bidder shall confirm that he has noted the contents of the Preamble to the Price Schedule, Price Schedule, IFB, Material Requisition etc and quoted his prices accordingly without any deviation. |
| 2 | Indian Bidders shall furnish built-in CIF value if any, against each quoted item, giving details of description of goods, qty, merit rate of custom duty etc. included in the quoted prices in attached " Format – 1B " |
| 3 | Bidder must quote the price only in online Price schedule in e-portal of HPCL in line with above format. Bidder to clearly indicate 'Quoted' / 'Not Quoted' against each item description in the price column in the unpriced Price Schedule. Bidders to submit Price in the Price Schedule in their Priced Bid and Unpriced Part with indicating 'Quoted' / 'Not Quoted' in the Unpriced Bid. |

| Sr. No. | Notes for Indian Bidders:- |
|---|---|
| 4 | Bidder confirm that he has noted the contents of the Preamble to the Price Schedule, Price Schedule, IFB/e-tender, Material Requisition etc and quoted his prices accordingly without any deviation. |
| 5 | Bidder to quote firm freight charges in the space provided in the price Schedule in line with instructions provided in IFB document which shall be considered for evaluation and ordering. |
| 6 | Bidder must quote the price in enclosed Price Schedule formats only. The formats shall not be changed and/or retyped. For any deviation to the formats, offer may be rejected. |
| 7 | Bidder should quote only for the item for which he is approved with HPCL /Consultant. Bidder should indicate "Not Applicable" in the price Schedule against the items for which the bidder is not eligible to quote (based on their enlistment with HPCL/Consultant ).In case Bidder quotes for the item for which he is not enlisted with HPCL /WorleyParsons, that item shall not be considered for evaluation. |
| 8 | Quoted prices are firm and fixed till complete execution of the entire order and no variation on any account is allowed, unless otherwise categorically specified in IFB. |
| 9 | Quoted Prices to include Mandatory Spares , Pre-commissioning / commissioning spares, all special tools and tackles & documentation, as per MR. However, bidder to provide list of Pre-commissioning / commissioning spares, all special tools and tackles, etc along with Unpriced (Technical) Bid , as per MR. |
| 10 | Bidder to quote for Two Years Operation and Maintenance Spares, as per MR. Separate list shall be provided by the Bidder for each Pump package in the format enclosed herewith with itemized cost and Ordering of these spares may be done by the Purchaser separately on a later date and not along with main equipment. The price of Two Years Operation and Maintenance Spares shall not be considered for commercial (price) evaluation of the bid. |
| 11 | Bidder to note that Technical loading, if any, shall be as per loading criteria specified in the MR and the same shall be considered for evaluation. Hence, bidder shall quote accordingly. |
| 12 | Bidders to upload the Un-priced and Priced part of their bids strictly in the Un-priced & Priced folders respectively in the e-tender portal of HPCL |
| 13 | Bidder to provide item wise price as mentioned in online price schedule format. However, evaluation and ordering shall be done on Schedule-wise Overall Lowest basis Bidder to note that evaluation and ordering shall be done on Schedule-wise basis with provision of each Pump along with associated Supervision & Training. AMC order may be placed by HPCL after defect liability Period. |
| 14 | Bidder’s quoted prices shall be deemed to include bidder’s entire scope of work and all obligations and responsibilities, as mentioned in Material Requisition and IFB / e-tender documents, irrespective of whether the same are specifically covered in the “Description” under above price Schedule or not. |
| 15 | The per diem rates for vendor's specialist visit at site shall be based on "Terms & Conditions for Supervision of Erection, Testing & Commissioning" enclosed with the IFB. Per Diem rates as quoted by the Bidder for 15 (Fifteen) man-days per Pump package shall be considered for evaluation. |
| 16 | The Per diem rates as quoted by bidder for 5 ( Five ) man-days for Supervision and 2 ( days ) for Training shall be considered for evaluation in case of VFD for Tag No : 30-PA-CF-101 A (900kW). |
| 17 | The per diem rates for vendor's specialist visit at site shall be based on "Training” enclosed with the IFB. Per Diem rates as quoted by the Bidder for 5 (Five) man-days per Pump package shall be considered for evaluation. |
| 18 | Service Tax, Swatch Bharat Cess & krishi kalyan cess (as applicable) on Supervision Charges shall be loaded for the purpose of evaluation as the same is non-cenvatable. |
| 19 | Bidder to quote AMC Charges on Lump sum basis & shall be based on "Terms & Conditions for AMC" enclosed with the IFB. |
| 20 | AMC order may be placed by HPCL after defect liability Period. |
| 21 | In case of change in quantity (Increase / Decrease), all quoted lump sum AMC charges shall be applicable on prorata basis for the changed quantities. |
| 22 | Bidder to provide separate price for Two Years Operational Spares in online Price Bid however this price shall not be considered for evaluation. |

FORMAT IB

**ENCLOSURE TO PRICE SCHEDULE FOR SUPPLY (DOMESTIC BIDDERS)**

Bid Document No. : **16000017-HD-11994**

ITEM: Mainline Centrifugal Pumps

NAME OF BIDDER: M/S _____

**DETAILS OF BUILT-IN-CIF VALUE OF IMPORT CONTENT, ITEM DETAIL OF IMPORT CONTENT AND RATES OF IMPORT DUTY CONSIDERED AND INCLUDED IN QUOTED FOT DESPATCH POINT PRICES UNDER PRICE SCHEDULE**

| DESCRIPTION | | | | CIF value of Import Content included in quoted supply item prices (In % of Quoted FOT Despatch Point Price) (Currency___ ) | Date of Exchange Rate (SBI Bill Selling) considered by Bidder | RATE OF IMPORT DUTY INCLUDED IN QUOTED SUPPLY PRICES | | | | | |
|---|---|---|---|---|---|---|---|---|---|---|---|
| For Item Sl.No. as per MR | Description of Imported Items | Unit | Qty. of Imported Items *(1) | | | CUSTOM TARRIF NO. | BASIC CUSTOMS DUTY (%) | CVD (%) | EDU. CESS +HIGHER EDU. CESS ON CUSTOMS DUTY (%) | SAD (%) | TOTAL CUSTOM DUTY (%) |
| | 1 | 2A | 2 | 3 | 4 | 6 | 7 | 8 | 9 | 10 | 11 |
| | | | | | | | | | | | |
| | i)_____ | | | | | | | | | | |
| | ii)_____ | | | | | | | | | | |
| | iii)_____ | | | | | | | | | | |
| | i)_____ | | | | | | | | | | |
| | ii)_____ | | | | | | | | | | |
| | iii)_____ | | | | | | | | | | |
| | | | | | | | | | | | |
| **TOTAL CIF VALUE** | | | | | | | | | | | |

NOTE: * (1) Bidder shall include built-in CIF value against each quoted item giving description of goods along with its quantities to be imported for Supply items and hence shall furnish Total CIF Value as indicated in above table.
(2) Bidder has to ensure that currency quoted in this format shall be same with the currency quoted in the main Price Schedule format for the built-in CIF value.

**Bid Document No. : 16000017-HD-11994**
**Item: Mainline Centrifugal Pumps**
**Name of Bidder :**

## PREAMBLE TO PRICE SCHEDULE FOR FOREIGN BIDDERS

| S.No. | Description | Unit | Quantity | Rate | Amount |
|---|---|---|---|---|---|
| | ***Schedule 1*** | | | | |
| ***1*** | **Supply of Mainline pumps for VDS** Design, Engineering, Procurement of bought out items, Supply, Manufacturing, Fabrication, Assembly, Painting, Inspection, Testing, Packing and Forwarding and Delivery of Mainline Centrifugal pumps including mandatory spares, Pre-commissioning / commissioning spares for VVSPL Capacity Augmentation project (As per scope of supply and works mentioned in the tender document for **tag no.s 10-PA-CF-104**) | Set | 1 | Please do not quote Rate here. Bidder to mention Prices only in E-procurement website of HPCL | Please do not quote Rate here. Bidder to mention Prices only in E-procurement website of HPCL |
| ***2*** | Supervision for Installation/commissioning of items specified at Sr.no.1 ,Tag No.10-PA-CF-104 , as per enclosed instructions to vendor in MR | Man Day | 15 | | |
| ***3*** | Training of items specified at Sr.no.1, Tag No.10-PA-CF-104 , as per enclosed instructions to vendor in MR | Man Day | 5 | | |
| ***4*** | **Supply of Mainline pumps for RBS** Design, Engineering, Procurement of bought out items, Supply, Manufacturing, Fabrication, Assembly, Painting, Inspection, Testing, Packing and Forwarding and Delivery of Mainline Centrifugal pumps including mandatory spares, Pre-commissioning / commissioning spares for VVSPL Capacity Augmentation project (As per scope of supply and works mentioned in the tender document for **tag no.s 20-PA-CF-103**) | Set | 1 | | |
| ***5*** | Supervision for Installation / commissioning of items specified at Sr.no.4 ,Tag No.20-PA-CF-103, as per enclosed instructions to vendor in MR | Man Day | 15 | | |
| ***6*** | Training of items specified at Sr.no.4 ,Tag No.20-PA-CF-103, as per enclosed instructions to vendor in MR | Man Day | 5 | | |
| ***7*** | **Supply of Mainline pumps for VBS** Design, Engineering, Procurement of bought out items, Supply, Manufacturing, Fabrication, Assembly, Painting, Inspection, Testing, Packing and Forwarding and Delivery of Mainline Centrifugal pumps including mandatory spares, Pre-commissioning / commissioning spares for VVSPL Capacity Augmentation project (As per scope of supply and works mentioned in the tender document for **tag no.s 30-PA-CF-101 D**) | Set | 1 | | |
| ***8*** | Supervision for Installation / commissioning of items specified at Sr.no.7 ,Tag No. 30-PA-CF-101 D , as per enclosed instructions to vendor in MR | Man Day | 15 | | |

| S.No. | Description | Unit | Quantity | Rate | Amount |
|---|---|---|---|---|---|
| 9 | Training of items specified at Sr.no. 7 ,Tag No. 30-PA-CF-101 D , as per enclosed instructions to vendor in MR | Man Day | 5 | Please do not quote Rate here. Bidder to mention Prices only in E-procurement website of HPCL | Please do not quote Rate here. Bidder to mention Prices only in E-procurement website of HPCL |
| 10 | **Supply of VFD for existing Mainline pump at VBS** Design, Engineering, Procurement of bought out items, Supply, Manufacturing, Fabrication, Assembly, Painting, Inspection, Testing, Packing and Forwarding and Delivery of VFD including mandatory spares, Pre-commissioning / commissioning spares for VVSPL Capacity Augmentation project (As per scope of supply and works mentioned in the tender document for **existing Main line pump tag no. 30-PA-CF-101 A (900kW)**) | EA | 1 | | |
| 11 | Supervision for Installation / commissioning of items specified at Sr.no. 10, VFD for Tag No : 30-PA-CF-101 A (900kW) , as per enclosed instructions to vendor in MR | Man Day | 5 | | |
| 12 | Training of items specified at Sr.no.10, VFD for Tag No : 30-PA-CF-101 A (900kW) , as per enclosed instructions to vendor in MR | Man Day | 2 | | |
| 13 | Annual Maintenance Charges for First year of operation after warranty period (1st year) of items specified at Sr.no.1 Tag No : 10-PA-CF-104 , Sr.no.4 Tag No : 20-PA-CF-103 , Sr.no.7 Tag No : 30-PA-CF-101 D , Sr.no.10 VFD for Tag No : 30-PA-CF- 101 A (900kW) as per enclosed instructions to vendor in MR | Lumpsum | 1 | | |
| 14 | Annual Maintenance Charges for Second year of operation after warranty period (2nd year) of items specified at Sr.no.1 Tag No : 10-PA-CF-104 , Sr.no.4 Tag No : 20-PA-CF-103 , Sr.no.7 Tag No : 30-PA-CF-101 D , Sr.no.10 VFD for Tag No : 30-PA-CF- 101 A (900kW) as per enclosed instructions to vendor in MR | Lumpsum | 1 | | |
| 15 | Annual Maintenance Charges for Third year of operation after warranty period (3rd year) specified of items specified at Sr.no.1 Tag No : 10-PA-CF-104 , Sr.no.4 Tag No : 20-PA-CF-103 , Sr.no.7 Tag No : 30-PA-CF-101 D , Sr.no.10 VFD for Tag No : 30-PA-CF- 101 A (900kW) as per enclosed instructions to vendor in MR | Lumpsum | 1 | | |
| 16 | Recommended spares for two years operation and maintenance, Tag No : 10-PA-CF-104 | Set | 1 | | |
| 17 | Recommended spares for two years operation and maintenance, Tag No : 20-PA-CF-103 | Set | 1 | | |
| 18 | Recommended spares for two years operation and maintenance, Tag No. 30-PA-CF-101 D | Set | 1 | | |
| 19 | Recommended spares for two years operation and maintenance, Tag No : 30-PA-CF-101 A (900kW) | Set | 1 | | |
| | **Schedule 1 Total** | | | | |

| S.No. | Description | Unit | Quantity | Rate | Amount |
|---|---|---|---|---|---|
| | ***Schedule 2*** | | | | |
| ***20*** | **Supply of Mainline pumps for IPS 1** Design, Engineering, Procurement of bought out items, Supply, Manufacturing, Fabrication, Assembly, Painting, Inspection, Testing, Packing and Forwarding and Delivery of Mainline Centrifugal pumps including mandatory spares, Pre-commissioning / commissioning spares for VVSPL Capacity Augmentation project (As per scope of supply and works mentioned in the tender document for **tag no.s 15-PA-CF-101 A/B/C**) | Set | 3 | Please do not quote Rate here. Bidder to mention Prices only in E-procurement website of HPCL | Please do not quote Rate here. Bidder to mention Prices only in E-procurement website of HPCL |
| ***21*** | Supervision for Installation/commissioning of items specified at Sr.no. 20, Tag No.15-PA-CF-101 A/B/C , as per enclosed instructions to vendor in MR | Man Day | 15 | | |
| ***22*** | Training of items specified at Sr.no.20, Tag No.15-PA-CF-101 A/B/C , as per enclosed instructions to vendor in MR | Man Day | 5 | | |
| ***23*** | Annual Maintenance Charges for First year of operation after warranty period (1st year) of Items Specified at Sr.no 20 , Tag No. 15-PA-CF-101 A/B/C as per enclosed instructions to vendor in MR | Lumpsum | 1 | | |
| ***24*** | Annual Maintenance Charges for Second year of operation after warranty period (2nd year) of Items Specified at Sr.no 20 , Tag No. 15-PA-CF-101 A/B/C as per enclosed instructions to vendor in MR | Lumpsum | 1 | | |
| ***25*** | Annual Maintenance Charges for Third year of operation after warranty period (3rd year) of Items Specified at Sr.no 20 , Tag No. 15-PA-CF-101 A/B/C as per enclosed instructions to vendor in MR | Lumpsum | 1 | | |
| ***26*** | Recommended spares for two years operation and maintenance, Tag No :Tag No.15-PA-CF-101 A/B/C | Set | 1 | | |
| | **Schedule 2 Total** | | | | |

| S.No. | Description | Unit | Quantity | Rate | Amount |
|---|---|---|---|---|---|
| | ***Schedule 3*** | | | | |
| ***27*** | **Supply of Mainline pumps for IPS 2** Design, Engineering, Procurement of bought out items, Supply, Manufacturing, Fabrication, Assembly, Painting, Inspection, Testing, Packing and Forwarding and Delivery of Mainline Centrifugal pumps including mandatory spares, Pre-commissioning / commissioning spares for VVSPL Capacity Augmentation project (As per scope of supply and works mentioned in the tender document for **tag no.s 25-PA-CF-101 A/B/C**) | Set | 3 | Please do not quote Rate here. Bidder to mention Prices only in E-procurement website of HPCL. | Please do not quote Rate here. Bidder to mention Prices only in E-procurement website of HPCL |
| ***28*** | Supervision for Installation/commissioning of items specified at Sr.no.27, Tag No. 25-PA-CF-101 A/B/C , as per enclosed instructions to vendor in MR | Man Day | 15 | | |
| ***29*** | Training of items specified at Sr.no.27, Tag No. 25-PA-CF-101 A/B/C, as per enclosed instructions to vendor in MR | Man Day | 5 | | |
| ***30*** | Annual Maintenance Charges for First year of operation after warranty period (1st year) of Items Specified at Sr.no 27, Tag No. 25-PA-CF-101 A/B/C as per enclosed instructions to vendor in MR | Lumpsum | 1 | | |
| ***31*** | Annual Maintenance Charges for Second year of operation after warranty period (2nd year) of Items Specified at Sr.no 27, Tag No. 25-PA-CF-101 A/B/C as per enclosed instructions to vendor in MR | Lumpsum | 1 | | |
| ***32*** | Annual Maintenance Charges for Third year of operation after warranty period (3rd year) of Items Specified at Sr.no 27, Tag No. 25-PA-CF-101 A/B/C as per enclosed instructions to vendor in MR | Lumpsum | 1 | | |
| ***33*** | Recommended spares for two years operation and maintenance, Tag No. 25-PA-CF-101 A/B/C | Set | 1 | | |
| | **Schedule 3 Total** | | | | |

| S.No. | Description | Unit | Quantity | Rate | Amount |
|---|---|---|---|---|---|
| | ***Schedule 4*** | | | | |
| ***34*** | **Supply of Mainline pumps for IPS 3** Design, Engineering, Procurement of bought out items, Supply, Manufacturing, Fabrication, Assembly, Painting, Inspection, Testing, Packing and Forwarding and Delivery of Mainline Centrifugal pumps including mandatory spares, Pre-commissioning / commissioning spares for VVSPL Capacity Augmentation project (As per scope of supply and works mentioned in the tender document for **tag no.s 45-PA-CF-101 A/B**) | Set | 2 | Please do not quote Rate here. Bidder to mention Prices only in E-procurement website of HPCL. | Please do not quote Rate here. Bidder to mention Prices only in E-procurement website of HPCL. |
| ***35*** | Supervision for Installation/commissioning of items specified at Sr.no.34, Tag No : 45-PA-CF-101 A/B, as per enclosed instructions to vendor in MR | Man Day | 15 | | |
| ***36*** | Training of items specified at Sr.no.34, Tag No : 45-PA-CF-101 A/B, as per enclosed instructions to vendor in MR | Man Day | 5 | | |
| ***37*** | Annual Maintenance Charges for First year of operation after warranty period (1st year) of Items Specified at Sr.no. 34, Tag No. 45-PA-CF-101 A/B as per enclosed instructions to vendor in MR | Lumpsum | 1 | | |
| ***38*** | Annual Maintenance Charges for Second year of operation after warranty period (2nd year) of Items Specified at Sr.no. 34, Tag No. 45-PA-CF-101 A/B as per enclosed instructions to vendor in MR | Lumpsum | 1 | | |
| ***39*** | Annual Maintenance Charges for Third year of operation after warranty period (3rd year) of Items Specified at Sr.no. 34, Tag No. 45-PA-CF-101 A/B as per enclosed instructions to vendor in MR | Lumpsum | 1 | | |
| ***40*** | Recommended spares for two years operation and maintenance, Tag No. 45-PA-CF-101 A/B | Set | 1 | | |
| | **Schedule 4 Total** | | | | |

]

| S.No. | Description | Unit | Quantity | Rate | Amount |
|---|---|---|---|---|---|
| | ***Schedule 5*** | | | | |
| ***41*** | **Supply of Mainline pumps for SBS** Design, Engineering, Procurement of bought out items, Supply, Manufacturing, Fabrication, Assembly, Painting, Inspection, Testing, Packing and Forwarding and Delivery of Mainline Centrifugal pumps including mandatory spares, Pre-commissioning / commissioning spares for VVSPL Capacity Augmentation project (As per scope of supply and works mentioned in the tender document for **tag no.s 40-PA-CF-102 A/B**) | Set | 2 | Please do not quote Rate here. Bidder to mention Prices only in E-procurement website of HPCL. | Please do not quote Rate here. Bidder to mention Prices only in E-procurement website of HPCL. |
| ***42*** | Supervision for Installation/commissioning of items specified at Sr.no.41, Tag No.40-PA-CF-102 A/B , as per enclosed instructions to vendor in MR | Man Day | 15 | | |
| ***43*** | Training of items specified at Sr.no.41, Tag No.40-PA-CF-102 A/B , as per enclosed instructions to vendor in MR | Man Day | 5 | | |
| ***44*** | Annual Maintenance Charges for First year of operation after warranty period (1st year) of Items Specified at Sr.no. 41, Tag No. 40-PA-CF-102 A/B as per enclosed instructions to vendor in MR | Lumpsum | 1 | | |
| ***45*** | Annual Maintenance Charges for Second year of operation after warranty period (2nd year) of Items Specified at Sr.no. 41, Tag No. 40-PA-CF-102 A/B as per enclosed instructions to vendor in MR | Lumpsum | 1 | | |
| ***46*** | Annual Maintenance Charges for Third year of operation after warranty period (3rd year) of Items Specified at Sr.no. 41, Tag No. 40-PA-CF-102 A/B as per enclosed instructions to vendor in MR | Lumpsum | 1 | | |
| ***47*** | Recommended spares for two years operation and maintenance, Tag No. 40-PA-CF-102 A/B | Set | 1 | | |
| | **Schedule 5 Total** | | | | |

| Sr. No. | Notes for Foreign Bidder :- |
|---|---|
| 1 | Scope of supply including testing, inspection, documentation etc. shall be strictly as per Material Requisition and other documents which are part of IFB. Bidder shall confirm that he has noted the contents of the Preamble to the Price Schedule, Price Schedule, IFB, Material Requisition etc and quoted his prices accordingly without any deviation. |

| | |
|---|---|
| 2 | Bidder shall furnish prices/details as above, in accordance with Instructions To Bidders/ Invitation For Bid (IFB) |
| 3 | Bidder must quote the price only in online Price schedule in e-portal of HPCL in line with above format. . |
| 4 | Bidder should quote only for the item for which he is approved with HPCL /Consultant. Bidder should indicate "Not Applicable" in the price Schedule against the items for which the bidder is not eligible to quote (based on their enlistment with HPCL/Consultant ).In case Bidder quotes for the item for which he is not enlisted with HPCL / WorleyParsons, that item shall not be considered for evaluation. |
| 5 | Bidder to clearly indicate 'Quoted' / 'Not Quoted' against each item description in the price column in the unpriced Price Schedule. Bidders to submit Price in the Price Schedule in their Priced Bid and Unpriced Part with indicating 'Quoted' / 'Not Quoted' in the Unpriced Bid. |
| 6 | Quoted F.O.B. Port of Shipment price shall include storage charges, forwarding, taxes, duties and all other charges upto FOB port of International shipment. |
| 7 | Bidder must quote Firm Ocean Freight charges in the space provided in the price schedule inline with instructions provided in IFB document which will be considered for evaluation and ordering. |
| 8 | Quoted Prices to include Mandatory Spares , Pre-commissioning / commissioning spares, all special tools and tackles & documentation, as per MR. However, bidder to provide list of Pre-commissioning / commissioning spares, all special tools and tackles,etc along with Unpriced (Technical) Bid , as per MR. |
| 9 | Bidder to quote for Two Years Operation and Maintenance Spares, as per MR. Separate list shall be provided by the Bidder for each Pump package in the format enclosed herewith with itemized cost and Ordering of these spares may be done by the Purchaser separately on a later date and not along with main equipment. The price of Two Years Operation and Maintenance Spares shall not be considered for commercial (price) evaluation of the bid. |
| 10 | Quoted prices are firm and fixed till complete execution of the entire order and no variation on any account is allowed, unless otherwise categorically specified in IFB. |
| 11 | Bidder to note that Technical loading, if any, shall be as per loading criteria specified in the MR and the same shall be considered for evaluation. Hence, bidder shall quote accordingly. |
| 12 | Bidders to upload the Un-priced and Priced part of their bids strictly in the Un-priced & Priced folders respectively in the e-tender portal of HPCL |
| 13 | Foreign Bidder shall quote in INR / USD / EURO / GBP / JPY only. Bidder must indicate Currency of Quote in Unpriced Bid and Priced offer. |
| 14 | Bidder to provide item wise price as per online-price schedule format. However, evaluation and ordering shall be done on Schedule-wise Overall Lowest basis. Bidder to note that evaluation and ordering shall be done on Schedule-wise basis with provision of each Pump along with associated Supervision & Training). AMC order may be placed by HPCL after defect liability Period. |
| 15 | Bidder’s quoted prices shall be deemed to include bidder’s entire scope of work and all obligations and responsibilities, as mentioned in Material Requisition and IFB / e-tender documents, irrespective of whether the same are specifically covered in the “Description” under above price Schedule or not. |
| 16 | The per diem rates for vendor's specialist visit at site shall be based on "Terms & Conditions for Supervision of Erection, Testing & Commissioning" enclosed with the IFB. Per Diem rates as quoted by the Bidder for 15 (Fifteen) man-days per Pump package shall be considered for evaluation. |
| 17 | The Per diem rates as quoted by bidder for 5 ( Five ) man-days for Supervision and 2 ( days ) for Training shall be considered for evaluation in case of VFD for Tag No : 30-PA-CF-101 A (900kW). |
| 18 | The per diem rates for vendor's specialist visit at site shall be based on "Training” enclosed with the IFB. Per Diem rates as quoted by the Bidder for 5 (Five) man-days per Pump package shall be considered for evaluation |
| 19 | Service Tax, Swatch Bharat Cess & krishi kalyan cess (as applicable) on Supervision Charges shall be loaded for the purpose of evaluation as the same is non-cenvatable. |

| | |
|---|---|
| 20 | Bidder to quote AMC Charges on Lump sum basis & shall be based on "Terms & Conditions for AMC" enclosed with the IFB. |
| 21 | AMC order may be placed by HPCL after defect liability Period. |
| 22 | In case of change in quantity (Increase / Decrease), all quoted lump sum charges for AMC shall be applicable on prorata basis for the changed quantities. |
| 23 | Bidder to provide separate price for Two Years Operational Spares in online Price Bid however this price shall not be considered for evaluation. |

# Chapter - 7

## Delivery Schedule

## (A) DELIVERY SCHEDULE FOR DOMESTIC (INDIAN) BIDDERS

Name of Bidder :

Bid Document No. : 16000017-HD-11994

Item : Mainline Centrifugal Pumps

| Item Description | Delivery from the date of Letter of Acceptance(LOA) |
|---|---|
| All items as per MR | The delivery period shall be Twelve (**12) Months** from the date of LOA from Bidder.<br>(Within **12 Months** as stated above all material shall arrive at project site).<br><br>Note:- Above referred delivery period shall be considered for liquidity damages |

Note : 1) The above delivery for Items at FOR site shall be reckoned from the date of LOA.

Signature of Bidder

## (B) DELIVERY SCHEDULE FOR FOREIGN BIDDERS

Name of Bidder :

Bid Document No. : 16000017-HD-11994

Item : Mainline Centrifugal Pumps

| Item Description | Delivery from the date of Letter of Acceptance(LOA) |
|---|---|
| All items as per MR | The delivery period shall be Eleven (**11) Months** from the date of LOA from Bidder,<br>(Within **11 Months** as stated above all material shall be dispatched on FOB Port of exit basis).<br><br>Note:- Above referred delivery period shall be considered for liquidity damages |

Note : The above delivery at FOB Port of International Shipment shall be reckoned from the date of LOA.

Signature of Bidder

**The detailed addresses of sites are mentioned in Annexure-V of Chapter-9**

# Chapter - 8

## BRIEF SUMMARY
## OF
## AGREED TERMS & CONDITIONS
## (A T & C)

# AGREED TERMS AND CONDITIONS

This questionnaire duly filled shall be returned along with each copy of Un-priced bid. Clauses confirmed hereunder should not be repeated in the bid. ALL THE COMMERCIAL TERMS AND CONDITIONS SHOULD BE INDICATED IN THIS FORMAT ONLY. IF REQUIRED DETAILS INCLUDING DEVIATION TO GPC, IF ANY, SHOULD BE INDICATED IN ONLINE DEVIATION FORMAT ONLY.

*In view of the rejection clause no. 16.0 of Chapter-2, ITB, will be strictly adhered to, bidders are advised* to *comply to the terms and conditions of the bid document in the First Instance itself*.

| S.NO. | DESCRIPTION | BIDDER'S CONFIRMATION |
|---|---|---|
| 1 | Confirm Your Offer is in complete compliance with the scope of supplies as specified in the Bidding document | |
| 2 | Confirm you have quoted your prices strictly in the applicable Price Schedule online format along with Unit and Total Prices. | |
| 3 | Specify Country of Origin of Goods offered | |
| 4 | Specify the Currency of quote (in accordance with terms specified in Bidding document) | |
| 5 | Indicate estimated shipping net and gross weight and Volume | |
| 6 | **INSPECTION :**<br>Confirm your quoted prices are inclusive of all testing and inspection requirements as specified in the bidding document. However, in addition to Bidder's own inspection, goods and services will be subject to inspection (stage wise and final as specified in MR) by Owner/Owner's Consultant for which no extra charges | |

| | | |
|---|---|---|
| | shall be payable by Owner, since all travel, personal and incidental expenses of Owner's inspectors shall be borne by Owner/owners' consultant. | |
| 7 | Confirm acceptance / compliance with the following conditions /clauses of the Bidding document<br>(i) Confirm price basis of your offer is strictly in accordance with Cl. nos 3 and 4 of Chapter-3.<br><br>(ii) Confirm You have furnished Bid security (Bank Guarantee) for the requisite amount in the required format as per terms of bidding document<br><br>(iii) Confirm that You shall furnish Contract Performance Bank Guarantee (Performance Security) as per terms of Bidding document.<br><br>(iv) Confirm your Firm delivery period shall be strictly as per requirement specified in the Bidding Document.<br><br>(v) Confirm that Your offer will remain Valid for acceptance for a period of **120 DAYS** from the Bid due date or extended due date (if the same is extended).<br><br>(vi) Confirm that the quoted prices shall remain FIRM AND FIXED till complete execution of Order<br><br>(vii) Confirm that Guarantee / Warranty shall be as per Special Conditions of Purchase.<br><br>(viii) Confirm that the Force Majeure shall be as per General Purchase Conditions | |

| | | |
|---|---|---|
| | (ix) Confirm acceptance of Price Reduction for delay in delivery as per Chapter-3 of Bidding document.<br><br>(x) Confirm total acceptance to Payment Terms as per Chapter-3 Special Conditions of Purchase<br><br>(xi) Arbitration clause shall be as per Special Purchase Conditions<br><br>(xii) All the pages of the priced bid shall be signed by the authorized signatory. In case all the pages of the priced bids are not signed, the bid shall be liable for rejection. Please confirm.<br><br>(xiii) Please confirm that your quoted price shall also include pre-commissioning/commissioning(if specified in the MR/ technical specifications) required for Commissioning of the item. | |
| 8 | Confirm Terms related to Taxes and Duties shall be as per Provisions of Bidding document | |
| 9 | All correspondence must be in English Language Only | |
| 10 | **This clause is for Indian Bidders only** | |
| 10.1 | Indicate dispatch Point | |
| 10.2 | Confirm Basis Quoted prices are exclusive of transit Insurance. However, transit insurance upto site from manufacturing plant is quoted separately in SOR. | |
| 10.3 | Indicate Rate of Central / Local Sales Tax (CST / LST) payable extra on finished goods<br><br>(i) CST without Concessional Form C | |

| | | |
|---|---|---|
| | (ii) CST with Concessional Form<br><br>(iii) Local Sales Tax (in case supplies are made from Originating state) without concessional form<br><br>(iv) Local sales tax with Concessional Form | |
| 10.4(i)<br><br><br>(ii) | Indicate Present rate of Excise duty plus Education Cess applicable extra on finished goods<br><br>Confirm that Excise Duty amount shall be reimbursed by Owner to seller only against receipt of CENVATABLE copy of Excise Invoice. | Excise Duty : _____ %<br>Ed. Cess : _____% |
| 10.5 | If there is any variation in excise duty plus education cess on finished goods at the time of Supplies due to turnover, Confirm the same will be borne by the Bidder. | |
| 10.6 | In case (10.5) above is not acceptable, indicate maximum rate of Excise duty plus Education Cess chargeable. | |
| 10.7 | Statutory variation in Excise duty plus Education Cess and Sales tax during the contractual delivery period on Finished goods only will be to Owner's account. | |
| 10.8 | Confirm, if there is delay beyond contractual delivery date for reasons attributable to Bidder, any increase in Sales tax and / or excise duty plus education cess will be borne by the Bidder and any decrease shall be passed on to Owner. | |
| 10.9 | Confirm, in case of delay in delivery, due to reasons attributable to Bidder, any new or additional taxes and duties imposed after contractual delivery dates shall be to Bidder's account. | |

| | | |
|---|---|---|
| 10.10 | If offer is based on certain imported raw materials / components required for goods offered, Please note and specify the following :<br>(i) Owner will not provide any Import License for the same<br><br>(ii) Confirm that you have quoted prices on Merit rate of Customs duty (without essentiality certificate)<br><br>(iii) Confirm you have furnished built in CIF import content in your price bid.<br><br>(iv) Indicate rate of customs duty considered and included in the quoted prices<br><br>(v) Indicate classification(s) under which Bidder intents to import<br><br>(vi) Confirm that any upward variation due to wrong classification(s) considered in Offer shall be absorbed by the Bidder, whereas any downward variations on account of the same shall be passed on to the Owner.<br><br>(vii) Please note and confirm that any variations in Foreign Exchange rates and in Customs duty shall be to Owner's account as per terms specified in the bid document.<br><br>(viii) Confirm Bidder shall claim variation on account of Customs duty and / or foreign exchange rate, separately after receipt of goods at site, against documentary evidence | |
| 11 | **This clause is for Foreign Bidders only** | |
| 11.1 | Indicate International sea Port of Exit | |

| | | |
|---|---|---|
| 11.2 | (i) Letter of Credit shall be opened through a Government of India Nationalized Bank and hence need not be confirmed.<br><br>(ii) In case You insist for a confirmed LC, confirmation charges will be to your account. Confirm acceptance. | |
| 11.3 | Confirm your quoted prices include transit Insurance upto FOB Port of Shipment | |
| 11.4 | All taxes, duties and levies of any kind payable upto FOB Port of shipment shall be borne by the Bidder. | |
| 11.5 | All Bank Charges and Stamp duties payable outside India in connection with the payments to be made under the Purchase Order shall be borne by the Bidder. All Bank Charges and Stamp duties payable in India (only Owner's banker) shall be borne by the Owner. | |
| 11.6 | In case of Foreign Bidder insisting for having Indian Agent, furnish the following :<br><br>(i) The Unavoidable justification for engaging the Indian Agent<br><br>(ii) Name and complete address of Indian Agent including Telephone & Fax number<br><br>(iii) RBI Registration Number<br><br>(iv) Agency's commission (including service tax @ 15%) included in Quoted prices as % of quoted FOB prices (Payable in equivalent non-convertible Indian Rupees upon complete execution of Order and supplies are received and acceptable at sites.<br><br>(v) Submit Copy of agreement between | _____ % |

| | | |
|---|---|---|
| | Foreign Bidder and Indian Agent | |
| 11.7 | Please Indicate the name and address of your Bankers | |
| 12 | Please confirm that you have not been banned or delisted by any Government or Quasi Government agencies or PSUs. If you have been banned, then this fact must clearly be stated. This does not necessarily be cause for disqualification. However, if this declaration is not furnished the bid shall be rejected as non-responsive. | |
| 13 | Please confirm that you have filed in, signed and attached the enclosed "Proforma of Declaration of Black Listing/Holiday Listing" along with your Unpriced offer. | |
| 14 | Confirm acceptance to part order. Offer for items as per the terms specified in the bid document. For all items individual quantities will not be split. | |
| 15 | Owner reserves the right to make any changes in the terms and conditions of bid document. Confirm. | |
| 16 | The Bidder is required to state whether any of the Director's Bidder is a relative of any Director of Owner or the Bidder is a firm in which any Director of Owner or his relative is a partner. | |
| 17 | (a) Confirm acceptance in Toto of the Terms and Conditions contained in the Bid document<br><br>(i) Instructions to Bidders & e-tendering<br><br>(ii) Special Conditions of Purchase<br><br>(ii) General Purchase conditions (GPC)<br><br>(iii) All other commercial documents / attachments / Chapters of the bid document | |

| | | |
|---|---|---|
| | (b) In case of reservations, confirm that clause wise comments have been specified as annexure to this format.<br><br>(c) All the terms and conditions have been indicated in this format (including Annexure, if any) and have been repeated in the Bid elsewhere. It is noted that terms and conditions indicated elsewhere including any printed terms and conditions shall not be considered by the owner | |
| 18 | Furnish average annual Financial Turnover figures of last 3 years of bidder / manufacturer and or trading company (house) whichever is applicable<br>**TURNOVER**<br>2013-2014 (2014)<br>2014-2015 (2015)<br>2015 - 2016 (2016)<br><br>In support of above Bidder shall enclose copies of its published Annual reports of preceding 3 years. Confirm compliance. | |
| 19 | As a mandate by the Company the purchase of new equipment and products with asbestos containing material is prohibited. Kindly confirm the product supplied does not contain asbestos containing material. | |

**BIDDERS NAME :**

**ADDRESS :**

**SIGNATURE & SEAL:**

FAX NO. TEL NO.: EMAIL :

# Chapter - 9

## Proforma & Annexures

| | | |
|---|---|---|
| 1) | Annexure-A : | Bid Security Form (EMD) |
| 2) | Annexure-B : | Performance Bank Guarantee (PBG) |
| 3) | Annexure-C : | Letter of Authority for attending and Subsequent Negotiations/Conferences |
| 4) | Annexure-D : | Declaration Form |
| 5) | Annexure-E : | Undertaking of Adequate Capacity |
| 6) | Annexure-F : | Bidder's Queries |
| 7) | Annexure-G : | NSIC Certificate Details |
| 8) | Annexure-H : | Certificate of Non-Involvement of Agent |
| 9) | Annexure- I : | Proforma for Details of Indian Agent |
| 10) | Annexure- J : | Declaration Details for Marine Transit Insurance (To be Submitted by Foreign Bidder) |
| 11) | Annexure-K : | Bidder's General Information |
| 12) | Annexure-L : | Annual Turnover Form |
| 13) | Annexure-M : | Integrity Pact |
| 14) | Annexure-N : | Bank Guarantee Format for release of advance payment |
| 15) | Annexure- P : | Technical Check list |
| 16) | Annexure- Q : | Reference list |
| 17) | Annexure-R : | Compliance Statement |
| 18) | Annexure-S : | Grievance Redressal Mechanism |
| 19) | Annexure-T : | Advice from supplier/contractor for E-payment |
| 20) | Annexure-U : | Reverse Auction Clause. |
| 21) | Annexure- V : | Detailed Addresses of sites |
| 22) | Annexure-X : | Bank Guarantee For Security Deposit |
| 23) | Annexure-Y : | Arbitration Clause |
| | | Arbitration Clause In Foreign Procurement Agreements |

**ANNEXURE-A**

**BANK GUARANTEE IN LIEU OF EARNEST MONEY DEPOSIT**
**(On Non-Judicial stamp paper of appropriate value)**

To :
Hindustan Petroleum Corporation Limited
(Address as applicable)

IN CONSIDERATION OF MESSRS. HINDUSTAN PETROLEUM CORPORATION LIMITED a Government of India Company registered under the Companies Act, 1956, having its registered office at 17, Jamshedji Tata Road, Bombay-20 (hereinafter called "the Corporation" which expression shall include its successor in business and assigns)issued a tender on Messrs. ..... a partnership firm/sole proprietor business/a company registered under the Companies Act, 1956 having its office at (hereinafter called "the Tenderer" which expression shall include its executors, administrators and assigns) against Tender no..... dated ..... (hereinafter called 'the tender' which expression shall include any amendments/ alterations to 'the tender' issued by "the Corporation") for the supply of goods to/execution of services for "the Corporation" and "the Corporation" having agreed not to insist upon immediate payment of Earnest Money for the fulfillment of the said tender in terms thereof on production of an acceptable Bank Guarantee for an amount of ₹..... (Rupees ..... only).

We, ..... Bank having office at ..... (hereinafter referred to as "the Bank" which expression shall include its successors and assigns) at the request and on behalf of "the Tenderer" hereby agree to pay to the Corporation without any demur on first demand an amount not exceeding ₹..... (Rupees ..... only)against any loss or damage, costs, charges and expenses caused to or suffered by "the Corporation" by reason of non-performance and fulfillment or for any breach on the part of "the Tenderer" of any of the terms and conditions of the said 'tender'.

2. We,..... Bank further agree that "the Corporation" shall be sole Judge whether the said 'Tenderer' has failed to perform or fulfill the said 'tender' in terms thereof or committed breach of any of the terms and conditions of 'the order' and the extent of loss, damage, cost, charges and expenses suffered or incurred or would be suffered or incurred by "the Corporation" on account thereof and we waive in favour of "the Corporation" all the rights and defenses to which we as guarantors and/or "the Tenderer" maybe entitled to.

3. We,..... Bank further agree that the amount demanded by "the Corporation" as such shall be final and binding on "the Bank" as to "the Bank" 's liability to pay and the amount demanded and "the Bank" to undertake to pay "the Corporation" the amount so demanded on first demand and without any demur

notwithstanding any dispute raised by “the Tenderer” or any suit or other legal proceedings including arbitration pending before any court, tribunal or arbitrator relating thereto, our liability under this guarantee being absolute and unconditional.

4. We,.....Bank further agree with “the Corporation” that “the Corporation” shall have the fullest liberty without our consent and without affecting in any manner our obligations hereunder to vary any of the terms and conditions of the said ‘tender’/or to extend time of performance by “the Tenderer” from time to time or to postpone for any time to time any of the powers exercisable by “the Corporation” against “the Tenderer” and to forbear to enforce any of the terms and conditions relating to “the tender” and we shall not be relieved from our liability by reason of any such variation or extension being granted to “the Tenderer” or for any forbearance, act or omission on the part of “the Corporation” or any indulgence by “the Corporation” to “the tenderer” or by any such matter or things whatsoever which under the law relating to sureties would but for this provision have the effect of relieving us.

5. NOTWITHSTANDING anything hereinbefore contained, our liability under this Guarantee is restricted to.₹ ..... (Rupees..... only). Our liability under this guarantee shall remain in force until expiration of six months from the due date of opening of the said ‘tender’. Unless a demand or claim under this guarantee is made on us in writing within said period, that is, on or before ..... all rights of “the Corporation” under the said guarantee shall be forfeited and we shall be relieved and discharged from all liabilities thereunder.

6. We, …….. Bank further undertake not to revoke this guarantee during its currency except with the previous consent of the “the corporation” in writing.

7.0 We,..... Bank lastly agree that “the Bank” 's liability under this guarantee shall not be affected by any change in the constitution of “the Tenderer” .

8.0 “The Bank” has power to issue this guarantee in favour of “the Corporation” in terms of the documents and/or the agreement/Contract or MOU entered into between “the Tenderer” and “the Bank” in this regard.

IN WITNESSW HEREOF the Bank has executed this document on this ..... day of ……

For ..... Bank

(by its constituted attorney)
(Signature of a
person authorized to sign
on behalf of “the Bank”)

**ANNEXURE-B**

**BANK GUARANTEE FOR PERFORMANCE OF THE OBLIGATIONS OF SUPPLIER / CONTRACTOR**

(On Non-Judicial stamp paper of appropriate value)

TO : Hindustan Petroleum Corporation Limited
(Address as applicable)

IN CONSIDERATION OF THE HINDUSTAN PETROLEUM CORPORATION LTD. a Government of India Company registered under the Companies Act,1956, having its registered office at 17, Jamshedji Tata Road, Bombay -400 020 (hereinafter called "the Corporation" which expression shall include its successors and assigns) having awarded to M/s _____ a partnership firm/sole proprietor business/a company registered under the Companies Act, 1956 having its office at _____ (hereinafter referred to as "the Supplier" which expression shall wherever the subject or context so permits includes its successors and assigns) a supply contract in terms inter alia, of "the Corporation's" Order No. _____ dated _____ and the General procurement conditions of "the Corporation" and upon the condition of "supplier's" furnishing security for the performance of "the Supplier's" obligations and/or discharge of "the supplier's" liability under and/or in connection with the said supply contract upto a sum of ₹. _____ (Rupees_____) amounting to 10% (ten percent) of the total contract value.

We, _____ (hereinafter called "the Bank" which expression shall include its successors and assigns) hereby jointly and severally undertake and guarantee to pay to "the Corporation" in rupees forthwith on demand in writing and without protest or demur of any and all moneys anywise payable by "the Supplier" to "the Corporation" under, in respect of or in connection with the said supply contract inclusive of all the Corporation's losses and damage and costs, (inclusive between attorney and client) charges, and expenses and other moneys anywise payable in respect of the above as specified in any notice of demand made by "the Corporation" to the Bank with reference to this Guarantee upto and aggregate limit of ₹ _____ (Rupees _____ ) and "the Bank" hereby agrees with "the Corporation" that:

1 This Guarantee/Undertaking shall be a continuing Guarantee / Undertaking and shall remain valid and irrecoverable for all claims of "the Corporation" and liabilities of "the Supplier" arising upto and until midnight of _____

2 This Guarantee/Undertaking shall be in addition to any other guarantee or security whatsoever that "the Corporation" may now or any time anywise have in relation to

"the Supplier's obligation/liabilities under and/or connection with the said supply contract, and "the Corporation" shall have full authority to take recourse to or enforce this security in preference to the other security(ies) at its sole discretion and no failure on the part of "the Corporation" to enforcing or requiring enforcement to any other security shall have the effect of releasing "the Bank" from its full liability hereunder.

2 "The Corporation" shall be at liberty without reference to "the Bank" and without affecting the full liability of "the Bank" hereunder to take any other security in respect of "the Supplier's" obligation and/or liabilities under or in connection with the said supply contract and to vary the term vis-a-vis "the supplier" of the said supply contract or to grant time and/or indulgence to "the Supplier" or to reduce or to increase or otherwise vary the prices of the total contract value or to release or to forebear from enforcement of all or any of the obligations of "the supplier" under the said supply contract and/or the remedies of "the Corporation" under any other security(ies) now or hereafter held by "the Corporation" and no such dealing(s), variation(s) or other indulgence(s) or agreement(s) with "the supplier" or release of forbearance whatsoever shall have the effect of releasing "the Bank" from its full liability to "the Corporation" hereunder or of prejudicing rights of "the Corporation" against "the Bank".

4. This Guarantee/Undertaking shall not be determined or affected by the liquidation or winding up, dissolution or change of constitution or insolvency of "the supplier" but shall in all respects and for all purposes be binding and operative until payment of all moneys payable to "the Corporation" in terms hereof

5. "The Bank" hereby waives all rights at any time inconsistent with the terms of this Guarantee/Undertaking and the obligations of "the Bank" in terms hereof shall not be anywise affected or suspended by reason of any dispute having been raised by "the suppliers" (whether or not pending before any arbitrator, officer, tribunal or court) or any denial of liability by "the supplier" or any other order of communication whatsoever by "the supplier" stopping or preventing or purporting to stop or prevent any payment by "the Bank" to "the Corporation" in terms hereof.

6. The amount stated in any notice of demand addressed by "the Corporation" to "the Bank" as liable to be paid to "the Corporation" by "the supplier" or as suffered or incurred by "the Corporation" on account of any losses or damages or costs, charges/and/or expenses shall be as between "the Bank" and "the Corporation" be conclusive of the amount so liable to be paid to "the Corporation" or suffered or incurred by "the Corporation", as the case may be, and payable by "the Bank" to "the Corporation", in terms hereof.

7. Notwithstanding anything contained herein above:
i) Our liability under this guarantee shall not exceed R.....
ii) This Bank Guarantee shall be valid upto and including .....; and
iii) We are liable to pay the guarantee amount or any part thereof under this Bank Guarantee only and only if you serve upon us a written claim or demand on or # before the expiry of 30 days from the date of expiry of this guarantee.

8. "The Bank" has power to issue this guarantee in favour of "the Corporation" in terms of the documents and/or the agreement/contract or MOU entered into between "the supplier" and "the Bank" in this regard.

IN WITNESS Where of _____ Bank, has executed this document at _____ on _____ 20….._____ Bank (by its constituted attorney)

(signature of a person authorized to sign on behalf of "the Bank")

**ANNEXURE-C**

**LETTER OF AUTHORITY**

**PROFORMA FOR LETTER OF AUTHORITY FOR ATTENDING AND SUBSEQUENT NEGOTIATIONS/CONFERENCES**

To. Date:

HINDUSTAN PETROLEUM CORPORATION LIMITED,
(Address as applicable)

Attn.....

Dear Sirs,

We.....hereby authorize following representatives (s) to attend the Pre Bid meeting / Negotiation or for any other correspondence and communication against your Bidding document number No. .....for..... (Item Name).....

1. Name & Designation : ..... Signature.....

2. Name & Designation : ..... Signature.....

We confirm that we shall be bound by all and whatsoever our representative (s) shall commit.

Yours faithfully,

Signature.....
Name & Designation.....
For & on behalf of.....

**Note:**
This Letter of Authority should be on the letterhead of the Bidder and should be signed by a person competent and having the power of attorney to bind the Bidder.

**ANNEXURE-D**

## DECLARATION

**(To be submitted along with Un-priced bid)**

(M/s. _____) hereby declare that we have not been banned or delisted or blacklisted or put on holiday list by any government or quasi Government agencies or PSUs.

**Stamp and Signature of Bidder**

**Note : If a bidder has been banned or delisted or blacklisted or put on holiday list by any Government or quasi Government agencies or PSU, this fact must be clearly stated with details and it may not necessarily be a cause for disqualifying him. If this declaration is not given, the bid will be rejected as nonresponsive.This declaration should be on the letterhead of the Bidder and should be signed by a person competent and having the power of attorney to bind the Bidder.**

**ANNEXURE -E**

## UNDERTAKING OF ADEQUATE CAPACITY

An Undertaking from the Bidder Confirming that their Plant / Facility has Adequate Capacity to handle Concurrent Orders and the Supplies to be made to HPCL will not get delayed due to the concurrent orders from other Clients

| PRESENT COMMITMENTS AS ON 28/02/2017 | | | | | | | | |
|---|---|---|---|---|---|---|---|---|
| SR. NO. | FULL POSTAL ADDRESS OF CLIENT & NAME OF OFFICER-IN-CHARGE | DESCRIPTION OF THE WORK | VALUE OF CONTRACT (In Rupees) | DATE OF COMMENCEMENT OF WORK | SCHEDULE COMPLETION PERIOD | %AGE COMP. AS ON DATE | EXPECTED DATE OF COMPLETION | REMARKS |
| | | | | | | | | |

**Stamp and Signature of Bidder**

**Note: To be submitted on letter head of company.**

**Annexure F**

**BIDDER'S QUERIES**

| SL. NO. | BIDDING DOCUMENT | | SUBJECT | BIDDER'S QUERY | OWNER'S REPLY |
|---|---|---|---|---|---|
| | PAGE NO. | CLAUSE NO. | | | |
| | | | | | |

NOTE: Bidder's Queries may be submitted online.

**Annexure –G**

## NSIC CERTIFCATE DETAILS

**TO BE FILLED BY BIDDERS REGISTERED WITH NSIC**

| | | |
|---|---|---|
| 1 | NAME OF BIDDER | |
| 2 | WHETHER REGISTERED WITH NSIC : YES / NO | |
| 3 | WHETHER COPY OF NSIC CERTIFICATE ENCLOSED : YES / NO | |
| 4 | NSIC REGISTRATION CERTIFICATE IS VALID UPTO | |
| 5 | MONETARY LIMIT OF NSIC REGISTRATION CERTIFICATE | |
| 6 | WHETHER ITEM QUOTED IS COVERED IN NSIC REGISTRATION CERTIFICATE IF YES, PLEASE MENTION THE ITEM NAME IN NSIC CERTIFICATE UNDER WHICH TENDERED ITEM IS COVERED | |
| 7 | Whether you have succeeded in securing orders for same items (item quoted), in competition (i.e. without price preference) with large scale units during the preceding 12 months (from the date of this tender. (say : yes or no) | |

**Stamp and Signature of Bidder**

**Annexure –H**

**CERTIFICATE OF NON-INVOLVEMENT OF AGENT**

Hindustan Petroleum Corporation Limited
(Address as applicable)

Dear Sir,

This is to certify that we have not engaged involve any Agent /Consultant/Retainer/Associate who is not an employee of _____ (name of your company) for payment of any remuneration thereof in India or abroad. Therefore, no Agent's / Representative's / consultant's commission is payable in India or abroad against this Contract.

**Stamp and Signature of Bidder**

Notes:

1. **This certificate should be issued in the Letter Head of the Bidder.**
2. This certificate is to be issued only if there is no Agent /Consultant/Retainer/Associate is involved.

**Annexure –I**

**PROFORMA FOR DETAILS OF INDIAN AGENT**

Hindustan Petroleum Corporation Limited
(Address as applicable)

Dear Sir,
Following are the details of Indian agent/ consultant/representative

| Sr. No | Description | Bidder's response |
|---|---|---|
| 1. | Name & address of agent / consultant / representative in India. | |
| 2. | The precise relationship between the bidder and their Agent /consultant/representative in India. | |
| 3. | The mutual interest which the bidder and Agent / Consultant / Representative in India have in the Business of each other. | |
| 4. | Any payment which the Agent / Consultant / Representative in India or abroad receives from the bidder whether as a commission for the contract or as a general retainer fee. | |
| 5 | Permanent Income Tax Account number of Agent / Consultant / Representative in India. | |
| 6 | Permanent Income Tax account of bidder in his country and also in India, if applicable. | |
| 7 | All services to be rendered by the Agent / Consultant / Representative. | |
| 8 | Bidder to confirm copy of agreement with their Indian Agent is enclosed in un-priced bid. | |

**Stamp and Signature of Bidder**

Note: Aforementioned information's need to be supported with necessary documents

**Annexure –J**

## DECLARATION DETAILS FOR MARINE TRANSIT INSURANCE
## (TO BE SUBMITTED BY FOREIGN BIDDER)

| | | |
|---|---|---|
| 1 | Name of vessel | |
| 2 | Earliest Time Arrival (ETA) | |
| 3 | B/L No. No. & date | |
| 4 | Port of Loading | |
| 5 | Port of Discharge | |
| 6 | Final Place of Discharge | |
| 7 | Commodity | |
| 8 | No. & Type of Packages/ packing dimensions/ weight | |
| 9 | Total Invoice Value (FOB) in foreign currency | To be filled after award of job |
| 10 | C & F Value (in INR) | To be filled by HPCL |
| 11 | Letter of Credit | To be filled by HPCL |
| 12 | Purchase Order No. & Date | To be filled by HPCL |
| 13 | Nature of shipment | |
| 14 | Party / Supplier | |

**ANNEXURE-K**

## BIDDER'S GENERAL INFORMATION

Bid Document No. ……

To
Hindustan Petroleum Corporation Limited
(Address as applicable)

1.1 Bidder Name
_____

1.2 Number of Years in Operation:
_____

1.3 Registered Address
_____

_____

1.4 Operation Address
if different from above:
_____

1.5 Telephone Number
_____
(Country code) (Area Code) (Tel. Number)

1.6 E-mail address & Web Site
_____

1.7 Telefax Number
_____
(Country Code) (Area Code) (Tel. Number)

1.8 ISO Certification, if any (if yes, please furnish details)

**Stamp and Signature of Bidder**

**ANNEXURE-L**

## ANNUAL TURNOVER STATEMENT

Bid Document No. ……..

The Bidder shall indicate herein his annual turnover during preceding Three(3) years based on the audited balance sheet/profit & loss account statement.

| **Financial Year** | **Annual Turnover** (Rs.) | **Networth** (Rs.) |
|---|---|---|
| 2015-2016 / 2015 | | |
| 2014-2015 / 2014 | | |
| 2013-2014 / 2013 | | |
| **AVERAGE ANNUAL TURNOVER FOR LAST THREE YEAR** | | |

**NOTE:**

1. Networth means paid up share capital, Share Application Money pending allotment* and reserves # less accumulated losses and deferred expenditure to the extent not written off.

# Reserves to be considered for the purpose of networth shall be all reserves created out of the profits and securities premium account but shall not include reserves created out of revaluation of assets, write back of depreciation and amalgamation.
*Share Application Money pending allotment will be considered only in respect of share to be allotted.
Accordingly, the definition of Networth shall be as follows:

| | |
|---|---|
| Paid up share capital | XXXX |
| Add: Share Application Money pending allotment | XXXX |
| Add: Reserves (As defined Above) | XXXX |
| Less: Accumulated Losses | XX |
| Less: Deferred Revenue Expenditure to the extent not written off | XX |
| **Net worth** | **XXXX** |

2. Bidder shall furnish necessary documentary evidence by uploading the documents in the e-portal of HPCL, such as notarized copies of audited Annual Report/Balance Sheet for last three (3) years as mentioned above, Original Certificate from Chartered Account indicating Turnover & Net worth.

**Stamp and Signature of Bidder**

Name of Bidder Company:

**ANNEXURE-M**

# Integrity Pact

The Integrity Pact duly signed by the authorized official of HPCL and the Contractor, will form part of this contract / supply order.

Proforma of Integrity Pact (which is issued along with the bidding document) shall be returned by the bidder along with technical bid, duly signed by the same signatory who signs the bid i.e. who is duly authorized to sign the bid. All the pages of the Integrity Pact shall be duly signed by the same signatory. Bidder's failure to return the Integrity Pact along with the bid, duly signed, shall lead to outright rejection of such bid.

If the Bidder has been disqualified from the tender process prior to the award of contract according to the provisions under Integrity Pact, HPCL shall be entitled to demand and recover from bidder Liquidated damages amount by forfeiting the EMD/Bid security (Bid Bond) as per provisions of Integrity Pact.

If the contract has been terminated according to provisions of the Integrity Pact, or if HPCL is entitled to terminate the contract according to provisions of Integrity Pact, HPCL shall be entitled to demand and recover from the Contractor liquidated damages amount by forfeiting the Performance Bank Guarantee / Security Deposit as per Integrity Pact.

**AGREEMENT**

**UNDER INTEGRITY PACT**

**No.**
**Dated**

**To,**

**HINDUSTAN PETROLEUM CORPORATION LIMITED**
**Sub : Procurement of Bidding Documents**

Ref.: Supply of Mainline Pumps - VREEP

Tender no. :16000017-HD-11994

HPCL and the Bidder agree that the Notice Inviting Tender (NIT) is an offer made on the condition that the bidder will sign the Integrity Pact and the Bid would be kept open in its original form without variation or modification for a period of (state the number of days from the last date for the receipt of tenders stated in the NIT) ..... days and the making of the bid shall be regarded as an unconditional and absolute acceptance of this condition of the NIT.

We confirm acceptance and compliance with the Integrity Pact in letter and spirit. We further agree that the contract consisting of the above conditions of NIT as the offer and the submission of Bid as the Acceptance shall be separate and distinct from the contract which will come into existence when bid is finally accepted by HPCL.

The consideration for this separate initial contract preceding the main contract is that HPCL is not agreeable to sell the NIT to the Bidder and to consider the bid to be made except on the condition that the bid shall be kept open for ..... days after the last date fixed for the receipt of the bids and the Bidder desires to make a bid on this condition and after entering into this separate initial contract with HPCL.

HPCL promises to consider the bid on this condition and the Bidder agrees to keep the bid open for the required period. These reciprocal promises form the consideration for this separate initial contract between the parties.

If Bidder fails to honour the above terms and conditions , HPCLshall have unqualified , absolute and unfettered right to encash / forfeit the bid security submitted in this behalf.

Yours faithfully,

(BIDDER)

Yours faithfully

(PURCHASER)

डी. पी. श्रीवास्तव D. P. SRIVASTAVA
प्रबंधक - क्रय Manager - Purchase
मंगलूर-हासन-मैसूर-सोलूर एलपीजी पाइपलाइन परियोजना
Mangalore Hassan-Mysore Solur LPG Pipeline Project
हिन्दुस्तान पेट्रोलियम कॉर्पोरेशन लिमिटेड
HINDUSTAN PETROLEUM CORPORATION LIMITED
बेंगलूरु Bengaluru - 560 052.

vivartan

## INTEGRITY PACT

### PRE-CONTRACT INTEGRITY PACT

**General**

This pre-bid pre-contract Agreement (hereinafter called the Integrity Pact) is made on _ day of the month of __ 20, between, on one hand, Hindustan Petroleum Corporation Limited acting through Shri (Designation of the officer,), Department (hereinafter called the "BUYER", which expression shall mean and include, unless the context otherwise requires, his successors in office and assigns) of the First Part and M/s._____ represented by Shri _____, _____, (hereinafter called the "BIDDER/Seller" which expression shall mean and include unless the context otherwise requires, his successors and permitted assigns) of the Second Part.

WHEREAS the BUYER proposes to procure_____ (Name what is being procured) and the BIDDER/Seller is willing to offer/has offered the (State what is being offered).

WHEREAS the BIDDER/SELLER is a private company/ public company/
Government undertaking / partnership / registered export agency, constituted in accordance with the relevant law in the matter and the BUYER is a Ministry/Department of the Government of Indian/PSU performing its functions on behalf of the President of India.

NOW, THEREFORE,

To avoid all forms of corruption by following a system that is fair, transparent and free from any influence/unprejudiced dealings prior to, during and subsequent to the currency of the contract to be entered into with a view to:-

Enabling the BUYER to obtain the desired said stores/equipment item at a competitive price in conformity with the defined specifications by avoiding the high cost and the distortionary impact of corruption on public procurement, and

Enabling BIDDER/SELLER to abstain from bribing or indulging in any corrupt practice in order to secure the contract by providing assurance to them that their competitors will also abstain from bribing and other corrupt practices and the BUYER will commit to prevent corruption, in any form, by their officials by following transparent procedures.

The parties hereto hereby agree to enter into this Integrity Pact and agree as follows:

**Commitments of the Buyer**

1.1 The Buyer undertakes that no official of the BUYER, connected directly or indirectly with the contract, will demand, take a promise for or accept, directly or through intermediaries, any bribe, consideration, gift, reward, favour or any material or immaterial benefit or any other advantage from the BIDDER, either for themselves or for any person, organization or third party related to the contract in exchange for an advantage in the bidding process, bid evaluation, contracting or implementation process related to the Contract.

1.2 The Buyer will, during the pre-contract stage, treat all Bidders alike, and will provide to all Bidders the same information and will not provide any such information to any particular

BIDDER which could afford an advantage to that particular BIDDER in comparison to other BIDDERs.

1.3 All the officials of the Buyer will report to SBU Head or concerned Functional Director of HPCL for any attempted or completed breaches of the above commitments as well as any substantial suspicion of such a breach.

2. In case of any such preceding misconduct on the part of such official(s) is reported by the BIDDER/SELLER to the BUYER with full and verifiable facts and the same is *prima facie* found to be correct by the Buyer, necessary disciplinary proceedings, or any other action as deemed fit, including criminal proceedings may be initiated by the BUYER and such a person shall be debarred from further dealings related to the contract process. In such a case while an enquiry is being conducted by the Buyer the proceedings under the contract would not be stalled.

2.1 The BUYER will exclude from the process all known prejudiced persons.

2.2 If the BUYER obtains information on the conduct of any of its employees which is a criminal offense under the relevant Anti-Corruption Laws of India, or if there be a substantive suspicion in this regard, the BUYER will inform its Vigilance Office and in addition can initiate disciplinary actions.

**Commitments of Bidders**

3. The BIDDER/SELLER commits himself to take all measures necessary to prevent corrupt practices, unfair means and illegal activities during any stage of its bid or during any precontract or post-contract stage in order to secure the contract or in furtherance to secure it and in particular commits himself to the following:-

3.1 The BIDDER/SELLER will not offer, directly or through intermediaries, any bribe, gift, consideration, reward, favour, any material or immaterial benefit or other advantage, commission, fees, brokerage or inducement to any official of the Buyer, connected directly or indirectly with the bidding process, or to any person, organization or third party related to the contract in exchange for any advantage in the bidding, evaluation, contracting and implementation of the Contract.

3.2 The BIDDER/SELLER further undertakes that it has not given, offered or promised to give, directly or indirectly any bribe, gift, consideration, reward, favour, any material or immaterial benefit or other advantage, commission, fees, brokerage or inducement to any official of the Buyer or otherwise in procuring the Contract or forbearing to do or having done any act in relation to the obtaining or execution of the Contract or any other Contract with the BUYER for showing or forbearing to show favour or disfavour to any person in relation to the Contract or any other Contract with the BUYER.

3.3 BIDDERs shall disclose the name and address of agents and representatives and Indian BIDDERs shall disclose their foreign principals or associates.

3.4 BIDDERs shall disclose the payments to be made by them to agents/brokers or any other intermediary, in connection with this bid/contract.

3.5 The BIDDER further confirms and declares to the BUYER that the BIDDER is the original manufacturer/integrator and has not engaged any individual or firm or company whether Indian or foreign to intercede, facilitate or in any way to recommend to the BUYER or any of its functionaries, whether officially or unofficially

to the award of the contract to the BIDDER, nor has any amount been paid, promised or intended to be paid to any such individual, firm or company in respect of any such intercession, facilitation or recommendation.

3.6 The Bidder, either while presenting the bid or during pre-contract negotiations or before signing the contract, shall disclose any payments he has made, is committed to or intends to make to officials of the Buyer or their family members, agents, brokers or any other intermediaries in connection with the contract and the details of services agreed upon for such payments.

3.7 The BIDDER/SELLER will not collude with other parties interested in the contract to impair the transparency, fairness and progress of the bidding process, bid evaluation, contracting and implementation of the contract.

3.8 The BIDDER/SELLER will not accept any advantage in exchange for any corrupt practice, unfair means and illegal activities.

3.9 The BIDDER/SELLER shall not use improperly, for purposes of competition or personal gain, or pass on to others, any information provided by the BUYER as part of the business relationship, regarding plans, technical proposals and business details, including information contained in any electronic data carrier. The BIDDER/SELLER also undertakes to exercise due and adequate care lest any such information is divulged.

3.10 The BIDDER/SELLER commits to refrain from giving any complaint directly or through any other manner without supporting it with full and verifiable facts.

3.11 The BIDDER/SELLER shall not instigate or cause to instigate any third person to commit any of the actions mentioned above.

3.12 The BIDDER/SELLER or any employee of the BIDDER/SELLER or any person acting on behalf of the BIDDER/SELLER, either directly or indirectly, is a relative of any of the officers of the BUYER, or alternatively, if any relative of an officer of the BUYER has financial interest/stake in the BIDDER/SELLER's firm, the same shall be disclosed by the BIDDER/SELLER at the time of filing of tender.

The term 'relative' for this purpose would be as defined in Section 6 of the Companies Act 1956.

3.13 The BIDDER/SELLER shall not lend to or borrow any money from or enter into any monetary dealings or transactions, directly or indirectly, with any employee of the BUYER.

4. **Previous Transgression**

4.1 The BIDDER/SELLER declares that no previous transgression occurred in the last three years immediately before signing of this Integrity Pact, with any other company in any country in respect of any corrupt practices envisaged hereunder or with any Public Sector Enterprise in India or any Government Department in India, that could justify BIDDER/SELLERs exclusion from the tender process.

4.2 The BIDDER/SELLER agrees that if it makes incorrect statement on this subject, BIDDER/SELLER can be disqualified from the tender process or the contract, if already awarded, can be terminated for such reason.

vivartan
Redefining Procurement

Earnest Money

5.1. While submitting commercial bid, the BIDDER/SELLER shall deposit an amount (to be specified in the RFP (Request for Proposal) as Earnest Money, with the BUYER through any of the following instruments (as specified In RFP):-

(i) Bank Draft or a Pay Order

(ii) A confirmed guarantee by an Indian Nationalized Bank, promising payment of the guaranteed sum to the BUYER, on demand within three working days without any demur whatsoever and without seeking any reasons whatsoever. The demand for payment by the BUYER shall be treated as conclusive proof for payment.

(iii) Any other mode or through any other instrument (to be specified in RFP).

5.2. The Security Deposit & Retention Money shall be valid & retained by the buyer for such period as specified in the RFP/GTC.

5.3 In the case of successful BIDDER/SELLER a clause would also be incorporated in the Article pertaining to Performance Bond in the Purchase Contract that the provisions of Sanctions for Violation shall be applicable for forfeiture of Performance Bond in case of a decision by the BUYER to forfeit the same without assigning any reason for imposing sanction for violation of this pact.

5.4 No interest shall be payable by the BUYER to the BIDDER/SELLER on Earnest Money/Security Deposit for the period of its currency.

6. **Sanctions for Violation**

6.1 Any breach of the aforesaid provisions by the BIDDER/SELLER or any one employed by it or acting on its behalf (whether with or without the knowledge of the BIDDER/SELLER) shall entitle the BUYER to take all or anyone of the following actions, wherever required:-

(i) To immediately call off the pre-contract negotiations without assigning any reason or giving any compensation to the BIDDER / SELLER. However, the proceedings with the other BIDDER(s) / SELLER(s) would continue.

(ii) The Earnest Money Deposit (in pre-contract stage) and/or Security Deposit Performance Bond (after the contract is signed) shall stand forfeited either fully or partially, as decided by the BUYER and the BUYER shall not be required to assign any reason therefore.

(iii) To immediately cancel the contract, if already signed, without giving any compensation to the BIDDER/SELLER.

(iv) To recover all sums already paid by the BUYER and in case of an Indian BIDDER/SELLER with interest thereon at 2% higher than the prevailing Prime Lending Rate of State Bank of India, while in case of a BIDDER/SELLER from a country other than India with interest thereon at 2% higher than the L1BOR. If any outstanding payment is due to the
BIDDER/SELLER from the BUYER in connection with any other contract for

any other vivartan stores, such outstanding payment could a/so be utilized to recover the aforesaid sum and interest.

(v) To encash the advance bank guarantee and performance bond/warranty bond, if furnished by the BIDDER/SELLER, in order to recover the payments, already made by the BUYER, along with interest.

(vi) To cancel all or any other Contracts with the BIDDER/SELLER. The BIDDER/SELLER shall be liable to pay compensation for any loss or damage to the BUYER resulting from such cancellation/rescission and the BUYER shall be entitled to deduct the amount so payable from the money(s) due the BIDDER/SELLER

(vii) To debar the BIDDER/SELLER from participating in future bidding processes of the Government of India or the BUYER for a minimum period of five years, which may be further extended at the discretion of the BUYER.

(viii) To recover all sums paid in violation of this Pact by BIDDER/SELLER(s) to any middleman or agent or broker with a view to securing the contract.

(ix) In cases where irrevocable Letters of Credit have been received in respect of any contract signed by the BUYER with the BIDDER/SELLER, the same shall not be opened.

(x) Forfeiture of Performance Bond in case a decision by the BUYER to forfeit the same without assigning any reason for imposing sanction for violation of this Pact.

6.2 The BUYER will be entitled to take all or any of the actions mentioned at para 6.1 (i) to (x) of this Pact also on the Commission by the BIDDER/SELLER or anyone employed by it or acting on its behalf (whether with or without the knowledge of the BIDDER/SELLER), of an offence as defined in Chapter IX of the Indian Penal code, 1860 or Prevention of Corruption Act, 1988 or any other statute enacted for prevention of corruption.

6.3 The decision of the BUYER to the effect that a breach of the provisions of this Integrity Pact has been committed by the BIDDER/SELLER shall be final and conclusive on the BIDDER/SELLER. However, the BIDDER/SELLER can approach the Independent external monitor(s) appointed for the purposes of this Pact.

7. **Fall Clause**

a) The Bidder undertakes that during the previous one year, the Bidder has not supplied / is not supplying and/or has not agreed to supply similar product systems or subsystems at a price lower than that offered in the present bid in respect of same location as mentioned in the present bid to any other Ministry/Department of the Government of India or PSU.

b) Further the Bidder unconditionally agrees and confirms that in case it is found at any stage that during the financial year in which bid was submitted by the bidder, the bidder had supplied/agreed to supply similar product systems or subsystems in respect of

same location to any other Ministry/Department of the Government of India or a PSU at a price lower than that mentioned in the present bid (**"Lower Price"**), then the Buyer by providing a written notice to the Bidder shall be at liberty to apply Lower Price to the contract and accordingly reduce the contract value. The Bidder further undertakes to refund to the Buyer the difference between payment received under the contract and the Lower Price (**"Price Difference"**) within 15 days of receipt of the said written notice.

c) In case the Price Difference is not received by the Buyer from the Bidder within the period stipulated under clause 7 (b), then the Buyer shall be free to recover the Price difference from any amount due and payable to the Bidder under any contract or transaction undertaken with the Buyer. "

**8. Independent Monitors**

8.1 The BUYER has appointed Independent Monitors (hereinafter referred to as Monitors) for this Pact, in consultation with the Central Vigilance Commission (Names and Addresses of the Monitors to be given).

8.2 The task of the Monitors shall be to review independently and objectively, whether and to what extent the parties comply with the obligations under this Pact.

8.3 The Monitors shall not be subject to instructions by the representatives of the parties and perform their functions neutrally and independently.

8.4 Both the parties accept that the Monitors have the right to access all the documents relating to the project procurement, including minutes of meetings.

8.5 As soon as the Monitors notice, or have reason to believe, a violation of this Pact, he will so inform the C&MD of the BUYER Corporation.

8.6 The BIDDER(s) accepts that the Monitors have the right to access without restriction to all Project documentation of the BUYER including that provided by the BIDDER/SELLER. The BIDDER/SELLER will also grant the Monitor, upon his request and demonstration of a valid interest, unrestricted and unconditional access to his project documentation. The same is applicable to Subcontractors. The Monitor shall be under contractual obligation to treat the information and documents of the BIDDER/Subcontractor(s) with the confidentiality.

8.7 The BUYER will provide to the Monitor sufficient information about all meetings among the parties related to the Project provided such meetings could have an impact on the contractual relations between the parties. The parties will offer to the Monitor the option to participate in such meetings.

8.8 The Monitors will submit a written report to the C&MD of the BUYER/Secretary in the Department/within 8 to 10 weeks from the date of reference or intimation to him by the BUYER / BIDDER and, should the occasion arise, submit proposals for correcting problematic situations.

**9. Facilitation of Investigation**

In case of any allegation of violation of any provisions of this Pact or payment of commission, the BUYER or its authorised agencies & other Govt. authorities shall be entitled to examine all the documents including the Books of Accounts of the BIDDER/SELLER and the BIDDER/SELLER shall provide necessary information and documents in English and shall extend all possible help for the purpose of such examination.

10. **Law and Place of Jurisdiction**

This Pact is subject to Indian Law. The place of performance and jurisdiction is the seat of the BUYER.

11 . **Other Legal Actions**

The actions stipulated in this Integrity Pact are without prejudice to any other legal action that may follow in accordance with the provisions of the extant law in force relating to any civil or criminal proceedings.

12. **Validity**

12.1 The validity of this Integrity Pact shall be from date of its signing and extend up to 5 years or the complete execution of the contract to the satisfaction of both the BUYER and the BIDDER/SELLER, including warranty period, whichever is later. In case BIDDER is unsuccessful, this Integrity Pact shall expire after six months from the date of the Signing of the contract.

12.2 Should one or several provisions of this Pact turn out to be invalid, the remainder of this Pact remains valid. In this case, the parties will strive to come to an agreement to their original intentions.

13. The Parties hereby sign this Integrity Pact at _____ on _____

| BUYER | BIDDER |
|---|---|
| Name of the Officer | Name of the Officer |
| Designation | Designation |
| HPCL | Name of the Organisation/Dep/Ministry/PSU |
| Witness | Witness |
| 1. | 1. _____ |
| 2. _____ | 2. _____ |

डी. पी. श्रीवास्तव D. P. SRIVASTAVA
प्रबंधक - क्रय Manager - Purchase
मंगलूरु-हासन-मैसूर-सोलूर एलपीजी पाइपलाइन परियोजना
Mangalore-Hassan-Mysore-Solur LPG Pipeline Project
हिन्दुस्तान पेट्रोलियम कॉर्पोरेशन लिमिटेड
HINDUSTAN PETROLEUM CORPORATION LIMITED
बेंगलूरु Bengaluru - 560 052.

**ANNEXURE-N**

**BANK GUARANTEE FOR ADVANCES**

(On non-judicial stamp paper of appropriate value)

To,
Hindustan Petroleum Corporation Ltd.,

(Address as applicable)

In CONSIDERATION OF MESSRS. HINDUSTAN PETROLEUM CORPORATION LIMITED, a Government of India Company registered under the Companies Act 1956, having its registered office at 17, Jamshedji Tata Road, Bombay - 400 020 (hereinafter called "the Corporation" which expression shall include its successors in business and assigns) having placed an order on Messrs _____ a partnership firm/sole proprietor business / a company registered under the Companies Act, 1956 having its office at _____ (hereinafter called "the Supplier" which expression shall include its successors and assigns) vide Order No. _____ dated _____ (hereinafter called "the Order" which expression shall include any amendments/alterations thereto as issued by "the Corporation") for the supply of goods/to the execution of Service for "the Corporation" and having agreed to pay the supplier as and by way of advance upto a sum of ₹. _____ (Rupees _____ only ) being _____ % of the value of the order in terms of "the Order" on production of an acceptable Bank Guarantee for an amount of ₹. _____ (Rupees _____ only)

1. We, _____ Bank having office at _____ (hereafter referred to as "the Bank") do at the request and on behalf of "the Supplier's" hereby agree to pay "the Corporation" without any demur on first demand an amount not exceeding ₹. _____ (Rupees _____ only) against any loss or damage, costs, charges and expenses caused to or suffered or would be caused to or suffered by "the Corporation" by reason of any breach on the part of "the Supplier" of any of the terms and conditions of the said order.

2. We, _____ Bank further agree that "the Corporation" shall be sole judge whether the said "Supplier" has committed breach of any of the terms and conditions of "the Order" and the extent of loss, damage, cost charges and expenses suffered or incurred or would be suffered or incurred by "the Corporation" on account thereof and we waive in favour of "the Corporation" all the rights and defences to which we as guarantors and/or "the Supplier" may be entitled to.

3. We, _____ Bank further agree that the amount demanded by "the Corporation" as such shall be final and binding on "the Bank" as to "the Bank's" liability to pay and amount demanded and "the Bank" undertake to pay "the Corporation" the amount so demanded on first demand and without any demur notwithstanding any dispute raised by "the Supplier" or any suit or other legal proceedings including arbitration pending before any court tribunal or arbitrator relating thereto, our liability under this guarantee being absolute and unconditional. (We _____ Bank further agree that the guarantee herein contained shall remain in full force and continue

to have full effect so long as the said amount remains unadjusted, provided, however, the value of the guarantee shall progressively reduce upon any adjustments being made by "the Corporation" against the said advance and "the Corporation" rights shall extend only to the value of the unadjusted amount.

4. We, _____ Bank further agree with "the Corporation" that "the Corporation" shall have the fullest liberty without our consent and without affecting in any manner our obligations hereunder to vary any of the terms and conditions of the said "order"/or to extend time of performance by "the Supplier" from time to time or to postpone for any time or from time to time any of the powers exercisable by "the Corporation" against "the Supplier" and to forbear to enforce any of the terms and conditions relating to "the Order" and we shall not be relieved from our liability by reason of any such variation or extension being granted to "the Supplier" or for any forbearance, act or omission on "the Supplier" or by any such matter or things whatsoever which under the Law relating to sureties would be for this provisions have the effect of relieving us.
5. Notwithstanding anything contained herein above:
   i) Our liability under this guarantee shall not exceed Rs.....
   ii) This Bank Guarantee shall be valid upto and including .....; and
   iii) We are liable to pay the guarantee amount or any part thereof under this Bank Guarantee only and only if you serve upon us a written claim or demand on or # *before the expiry of 30 days from the date of expiry of this guarantee*

6. We, _____ Bank further undertake not to revoke this guarantee during its currency except with the previous consent of "the Corporation" in writing.

7. We, _____ Bank lastly agree that "the Bank" liability under this guarantee shall not be affected by any change in the constitution of "the Supplier".

8. We, _____ Bank has power to issue this guarantee in favour of "the Corporation" in terms of the documents and/or the agreement/contract or MOU entered into between"the supplier" and "the Bank" in this regard.

IN WITNESS WHEREOF the Bank has executed this document on this _____ day of _____

_____
(FOR _____ BANK)
(by its constituted attorney)
(Signature of a person authorized
to sign on behalf of "the Bank")

**ANNEXURE-P**

**CHECKLIST-TECHNICAL**

| | |
|---|---|
| **Requisition for** | **Mainline Centrifugal Pumps** |
| **Project** | **VVSPL Capacity Augmentation Project** |

**Bidder confirms the following, as a minimum, is enclosed in the offer:**

| Sr. No. | Requirement | Complied by Bidder |
|---|---|---|
| 1.0 | Total compliance to technical requirements of the Material Requisition, as per Compliance Statement document, enclosed. | Yes/No |
| 2.0 | Bidder has quoted for Schedule –wise items covered in specification. | Yes/No |
| 3.0 | Bidder meets Bidder's qualification criteria (BQC) and documentary evidence in support of BQC is enclosed in the offer as per following, as a minimum: | Yes/No |
| | a) Name & Location of Plant | Yes/No |
| | b) Past track record for supply of Mainline Centrifugal Pumps (pumps of relevant Flow & Head / sizes as specified in BQC for the last seven years (i.e. copies of W.O./PO, Inspection release notes, completion certificate etc.) | Yes/No |
| 4.0 | Bidder confirms that for the items quoted by the bidder, the entire process of Mainline Centrifugal pumps manufacturing shall be carried out in the proposed plant. | Yes/No |
| 5.0 | Documents/ Catalogues etc.as per specification enclosed. | Yes/No |

**To be filled, signed and stamped by Bidder.**

**Stamp and Signature of Bidder**

**ANNEXURE-Q**

## Reference List of Supply of Mainline Centrifugal Pumps for Last Seven Years

| 1 | 2 | 3 | 4 | 5 | 6 | 7 | 8 | 9 | 10 | 11 | 12 | 13 | 14 | 15 |
|---|---|---|---|---|---|---|---|---|---|---|---|---|---|---|
| SR No. | Model | No. of Stages | Client (Company Name, Address, Email ID, Contact Phone No.) | Liquid Handled | Rated Capacity M3/ Hr, | Rated Head of Pump Metres, | Rated Speed RPM, | Range of speed RPM | Method of Speed Control | Driver Type Rating (kw) & Synchr, Speed | Total Hours Logged | Year of Supply | Purchase / Order | Inspection Release No. |
| | | | | | | | | | | | | | | |
| | | | | | | | | | | | | | | |
| | | | | | | | | | | | | | | |

**To be filled by Bidder.**

**Stamp and Signature of Bidder**

**ANNEXURE-R**

# COMPLIANCE TO BID REQUIREMENT

| | |
|---|---|
| **Requisition for** | **Mainline Centrifugal Pumps** |
| **Project** | **VVSPL Capacity Augmentation Project** |
| **Bidding Document No** | **16000017-HD-11994** |

**We hereby agree to fully comply with, abide by and accept without variation, deviation or reservation all technical, commercial and other conditions whatsoever of the bidding Documents and Addendum to the Bidding Documents for subject work issued by Owner/Consultant.**

**We hereby further confirm any terms and conditions mentioned in our bid (Un-priced as well as Priced Part) shall not be recognized and shall be treated as null and void.**

**Bidder's Seal** **Signature of Bidder**

**Name of Bidder**

**ANNEXURE-S**

## GRIEVANCE REDRESSAL MECHANISM

### 1.0 Background

Hindustan Petroleum Corporation (HPCL) has developed the following mechanism to deal with references/grievances if any that are received from Parties who participated /intends to participate in the Corporation Tenders. The scheme is as under:

### 2.0 Definitions : Grievance

For the purpose of this scheme, the word 'Grievance' would mean a written and signed representation received from party, who has participated/intends to participate in the tender of the Company, seeking inter-alia a review of the **process of finalization of tender** on the grounds that his right as a party to the tender has been affected for the reason to be provided by him which needs to be examined and decided in the interest of equity.

**Grievance Redressal Cell (GRC)**

It is the group that will review the references received from the Parties and decide the matter.

### 3.0 Authorities to handle grievances

3.1 There will be a process to deal with the grievances received from the tendering parties of the prospective tenderers based on the Tender document issued.

3.2 The first level, say **Level-I** of such process will comprise of a **Grievance Redressal Cell (GRC).** This Cell will consist of the following:

| Sr. No. | SBU/Function | Head | Member Finance | Member Procurement (Co-ordinator) |
|---|---|---|---|---|
| Refineries GRCs | | | | |
| 1 | Visakh Refinery | Head-Refinery | Head- Finance | Head- Materials |
| 2 | Mumbai Refinery | Head-Refinery | Head- Finance | Head- Materials |
| Marketing GRCs | | | | |
| 1 | Retail SBU | Head-Retail | Head- Comml.** | Head- Proc.** |
| 2 | Direct Sales | Head-Direct Sales | Head- Comml. ** | Head- Proc.** |
| 3 | LPG | Head-LPG | Head- Comml. ** | Head- Proc.** |
| 4 | Aviation | Head-Aviation | Head- Comml.** | Head- Proc.** |
| 5 | Projects & Pipelines* | Head-P&P | Head- Comml.** | Head- Proc.** |

| | | | | |
|---|---|---|---|---|
| 6 | Operaions & Distributions(O&D) | Head-O&D | Head- Comml.** | Head- Proc.** |
| **® 7** | **Gas, Renewable & Business Develop-ment, Mktg SBU/dept** | **Head - Gas, Renewable & Business Development, Mktg SBU/dept** | **Head–Comml. ***** | **Head- Proc.***** |
| Corporate GRCs | | | | |
| 1 | Corporate | Head-IS/HR<br>(as applicable) | Head- Finance (Corp.) | Head- Procurement<br>(DGM-Administration) |

* includes Marketing Projects,
** concerned SBU,
® *** **concerned SBU/dept**

® **REVISION : PROC-004/23.12.2014**

3.3 The Co-ordinator for each of the Cell is respective Head – Materials/Procurement of Visakh Refinery, Mumbai Refinery, Marketing SBUs & Corporate.

3.4 All the grievances will be lodged with the Co-ordinator of the Cell.

3.5 This Cell will examine the grievances and decide the matter.

3.6 The second level of Grievances Redressal Mechanism is the Executive Committee – Refineries for both Mumbai & Visakh Refineries, Executive Committee - Marketing & Executive Committee – Corporate for respective functions. The decision of the Executive Committee is final.

## 4.0 Grievances Redressal Process
## LEVEL –I

4.1 If a grievance is received by the Grievance Redressal Cell, the Co-ordinator will first acknowledge the receipt of the grievance to the aggrieved party within 48 hours from the time of receipt of the grievance (Excluding intervening Holidays).

4.2 The Grievance Redressal Cell (GRC) will forward the Grievance to the Tender Inviting Authority at the earliest, who will offer his comments/views to the Cell within 2 days of receipt from GRC.

4.3 On receipt of comments from Tender Inviting Authority, the Grievance Redressal Cell will meet and look into the grievances expressed by the aggrieved party along with the views/comments of the Tender Inviting Authority. The Grievance Redressal Cell can call for relevant records and documents to enable it to firm up its decision on the grievance.

4.4 The Grievance Redressal Cell will decide the matter within 14 days and thereafter communicate the decision to the aggrieved party.

**LEVEL –II**

4.5 The second level of Grievance Redressal Mechanism is the Executive Committee - Refineries for both Mumbai & Visakh Refineries and Executive Committee – Marketing & Executive Committee – Corporate for respective functions which would examine and decide on any appeal/ representation on the decision of the Grievance Redressal Cell.

4.6 Parties aggrieved by the decision of the Grievance Redressal Cell, can appeal / represent to the Executive Committee **within 7 days of receipt of the decision with a copy to GRC Level-I for co-ordination. Appeal received after seven days will not be considered**.

**4.7 The EC will decide the matter in appeal within 14 days and thereafter communicate the decision to the aggrieved party. The decision of the Executive Committee is final.**

**5.0 Time limitation for the handling of grievances**

5.1 Grievances regarding the Pre-qualification process should be lodged by the aggrieved party within one week from the date of Publication calling for pre-qualification bid Grievances received after one week from date Publication will not be considered.

5.2 The decision on Grievance pertaining to Pre-Qualification should be finalized before the shortlisting of the parties is concluded.

5.3 Specific Grievances regarding the Notice Inviting Tender (NIT) should be lodged by the aggrieved party within one week from the last date of sale of tender document or one week prior to the Due date for Bid Submission, whichever is earlier. Grievance regarding NIT, received thereafter shall not be considered.

5.4 Grievances relating to the tender process (other than “Notice Inviting Tender related grievances”) should be lodged within one week the date of operating the unpriced bids.

5.5 The Grievance Redressal Cell shall examine the case and decide within 15 working days from the date of receipt of the grievance and advise the function concerned of the same so that they can process the tender further.

5.6 Any grievance after price bid opening should be redressed before award of the contract No grievances shall be entertained which are received after one week of price bid opening.

5.7 The Co-ordinator of the Grievance Redressal Cell, on receipt of the grievance by the aggrieved party, should inform the Tender Inviting Authority not to finalise the contract till the disposal of the grievance by the Grievance Redressal Cell. The grievance lodged should be disposed of within a reasonable period of 14 working days so that there is no undue delay in awarding the contract.

## 6.0 Interim Suspension of Tendering Process

6.1 After any grievance is received by the Co-ordinator of the Grievance Redressal Cell, the Cell Members will meet and examine whether the tendering process relating to the concerned matter is to be suspended or not in consultation with the Tender Inviting Authority. The Cell will examine whether there exists a prima facie ground for suspending the tendering process and decide the matter. It may consult, if required, the Executive Committee as to whether the tendering process has to be suspended till a final decision is taken on the grievance.

6.2 The decision to suspend the tendering process or not and disposal of the grievance should preferably be taken by the Grievance Redressal Cell and/ or Executive Committee at the earliest but not later than 14 working days from the receipt of grievance keeping in mind the Schedule of activities connected with the tender concerned.

6.3 When it is decided to suspend the Tendering Process, the grievance should be examined and disposed off by the Grievance Redressal Cell & Executive Committee at the earliest, but not later than 15 days since it will be necessary to either continue with the tender as per earlier norms or it is decided to re-invite the tender with suitable changes.

## 7.0 Other General Provisions

7.1 A final written reply to the aggrieved party will be given by coordinator of Grievance Redressal Cell / Executive Committee within 21 working days from the date of receipt of the grievance in line with the minute of respective GRC/EC.

7.2 The Grievance Redressal Cell / Executive Committee, while firming up its recommendations, can seek the views of other relevant Department like Finance, Vigilance and Legal or any other Department concerned with the issue.

7.3 The Grievance Redressal Cell & / Executive Committee is entitled to give a personal hearing to the aggrieved party, if necessary.

7.4 If a Grievance is related to a contract already awarded and acted upon, and if the Grievance Cell & Executive Committee is of the view that the grievance needs review for remedial action for future tenders, it would submit its recommendation to the concerned SBU/Dept. head for future tenders.

7.5 Company's Tender Grievance Redressal Mechanism will be displayed in its Website in the Tenders Page.

7.6 The Grievance Redressal Cell & Executive Committee will maintain a grievance register giving details of the tender number, date of receipt of grievance letter, nature of grievance in brief, details of the decisions taken and the date of communication to the aggrieved party.

7.7 The Grievance Redressal Cell & Executive Committee will also submit a quarterly report on the grievances handled to the Committee of Functional Directors. A copy of Yearly Report will be submitted to the Board for information.

7.8 The relevant clause of Grievance Redressal Mechanism Procedure should be incorporated in GTC of all Tender documents **along with the name and address of** the Officer-designate of the Grievance Redressal Cell**/ Secretary of the concerned Executive Committee**, to whom the grievance letter**/ Appeal** should be addressed to.

**8.0 Integrity Pact**

**Notwithstanding the GRP guidelines above, the provisions of the Integrity Pact will be applicable independently to tenders of ₹ 1 Crore & above.**

**Annexure - T**

**ADVICE FROM SUPPLIER/CONTRACTOR FOR E-PAYMENT**
**(ON LETTER HEAD)**

Hindustan Petroleum Corporation Limited
(Address as applicable)

Dear Sirs,

The following is a confirmation/ updation of may bank details and I hereby affirm my our choice to opt for payment of amounts due to me under various contracts through electronic mode. I understand that Hindustan Petroleum Corporation Limited also reserves the right to send the payments due to me by a cheque/ demand draft/ electronics mode or through a banker.

A) Supplier/Contractor Details

1. Supplier/Contractor Name
2. Supplier Contractor Code
3. Address (including Pin Code)
4. Controlling officer name/SBU: E&P
5. P.A. No.
6. E-mail ID

B) Particulars of bank Account

1. Bank Name
2. Branch Name & branch code
3. Branch Address (incl. Pin Code)
4. 9 digit MICR No. of Bank and Branch

(As appearing in the MICR Cheque issued by Bank)

(Please do not give multicity cheque book code Number)

5. Account Type (Saving/Cash Credit/Current)
6. Account Number (as appearing on cheque)
7. IFSC Code of the Branch (for RTGS)
8. IFSC Code of the Branch (for NEFT)
9. NEFT Code No.

I/we hereby declare that the particulars given above are correct and the complete and also undertake to promptly advise and changes to the above details to HPCL. If the transaction is delay or not effected for reasons of incomplete or incorrect information or banking delays. I shall not hold Hindustan Petroleum Corporation Limited responsible. I also agree for printing of the bank details on the cheque or DD if the payment is effected by cheque/DD. The charges, if any, levied by my bank shall be settled by me/us.

Name (in capital) & signature of supplier / contractor

Authorized signatory

Date:

Official rubber stamp

**Note**

1. Bank details (B.1 to 9) to be confirmed by the bankers. Such confirmation shall duly signed & stamped by the bankers. Supplier code, bank account number and RTGS/NEFT number required essentially.

2. Please enclosed cancelled /photocopy of a cheque

**Annexure – U**

## Reverse Auction – Terms & Conditions and Procedure

HPCL proposes to conduct Reverse auction for the items or schedules or on overall basis as specified in the tender. Please go through the Terms & Conditions and Procedure given below and submit your acceptance to the same by signing and uploading this document along with unpriced bid.

**Terms and Conditions:**

1. HPCL reserves the right to carryout 'Online Reverse Auction' with techno-commercially accepted bidders for determining the lowest bidder for the requirements mentioned in this tender enquiry.

2. Online reverse auction shall be conducted by HPCL on a specified date and time. The vendors shall be participating in the reverse auction from their own offices / place of their choice. Internet connectivity shall have to be ensured by the bidders themselves. In extreme case of failure of Internet connectivity, (due to unforeseen circumstances), fax/ E-Mail communication shall have to be made immediately to Purchase Dept. HPCL may decide to extend the bidding time, at their discretion, but not as the right of the bidder.

3. Bidders are requested to confirm their willingness to participate in 'Online Reverse Auction' during their bid submission by confirming compliance to the Terms & Conditions and Procedure specified herewith. Please note that non acceptance to participate in the Reverse Auction process may lead to rejection of the bid without any further evaluation.

4. HPCL will pre-decide the commercial loading, if any, on the basis of the taxes & duties quoted by the bidder, and loading on account of commercial deviations, if any. The loading factors shall be displayed in the portal prior to the date scheduled for Reverse Auction Event.

5. As part of Reverse Auction process, the Start Bid price shall be specified by HPCL on Reverse Auction Portal, which shall be the lowest of the price bids submitted by the bidders on the e-procurement portal i.e. 'Bids opened for RA event' and HPCL's in-house estimate. **Please note that such priced bid opening shall be system driven and therefore bidder's identity vis-à-vis quoted price shall be confidential.**

6. In case of overall evaluation tenders, the Reverse auction shall be conducted on the bottom line, net delivered cost.

7. Reverse auction shall be held for a period of 60 minutes and shall be automatically extended by a further period of 5 minutes in case of receipt of any bid during the last 5 minutes of the auction period. This process shall continue until no bids are received in the last 5 minutes of the auction. Thereafter reverse auction shall get automatically closed. This shall be an automated process.

8. Any time extensions due to Force Majeure or unforeseen circumstance shall be granted at the sole discretion of HPCL.
9. Order may be placed on the lowest bidder, emerging out of the reverse auction process and HPCL's decision on award of contract shall be final and binding on all the bidders.

10. HPCL reserves the right to further rationalize the prices with lowest bidder for reducing the price at any time before ordering.

11. HPCL reserves the right to cancel the reverse auction after event is scheduled but before actual event taking place or after the reverse auction has completed in case of failure or any other reason. The reasons for cancellation shall be conveyed to all vendors.

12. In cases where tender is required to be cancelled after opening of priced bid and identification of L1 vendor and Reverse Auction was also part of tender, reasons for cancellation shall be conveyed to all vendors.

13. During Reverse Auction Process, if no bids are received within the scheduled/rescheduled date & specified time of the reverse auction, HPCL at its discretion can scrap the reverse auction and proceed with the opening of the Electronic priced bids submitted by the bidders. In which case HPCL shall display the bidder's identity and original rates.

14. The bid on the Reverse Auction Portal will be taken as an offer to sell. Bids once made, cannot be cancelled / withdrawn and the bidder shall be bound to sell the material/services at the final bid price, and as per the specifications mentioned in the tender. Should the bidder back out and not make the supplies as per the rates quoted or in case the material supplied/services is not as per specifications mentioned in the tender, HPCL shall take appropriate action as per the terms & conditions mentioned in the tender.

15. At the end of the Reverse Auction, HPCL will decide the successful bidder, basis the evaluation criteria specified in the tender. HPCL's decision on award of Contract shall be final and binding on all the Bidders.

16. HPCL shall not have any liability to bidders for any interruption or delay in access to the reverse auction portal irrespective of the cause.

17. The participation of vendors in the tendering process shall be construed as acceptance to the terms & conditions and procedure for the reverse auction until and unless the contrary is explicitly mentioned in the deviation sheet.

18. In case any bidder does not accept Reverse Auction Terms & Conditions and Procedure, HPCL reserves the right to reject the vendor at the Techno-commercial evaluation stage.

19. In case a bidder agrees for reverse auction in the un-priced bid but withdraws acceptance any time after tender due date & time, the EMD of such bidder may be forfeited along with rejection of offer at the sole discretion of HPCL.

20. Once Auction is started, no communication from vendor is entertained.

21. The Bidder shall not involve himself or any of his representatives in Price manipulation of any kind directly or indirectly by communicating with other suppliers / bidders.

22. The Bidder shall not divulge either his Bids or any other exclusive details of HPCL to any other party.

23. HPCL's decision on award of Contract shall be final and binding on all the Bidders.

24. HPCL can decide to extend, reschedule or cancel any Auction. If any changes are made by

HPCL after the first posting and the Bidder continues to access the site after that time, it shall be presumed that the bidder has accepted the changes.

25. HPCL shall not be responsible for any damages, including damages that result from, but are not limited to negligence. HPCL will not be held responsible for consequential damages, including but not limited to systems problems, inability to use the system, loss of electronic information etc.

**Reverse Auction Procedure**

**1.** In case HPCL decides to conduct Reverse Auction, the qualified bidders would be communicated on the same thru E-mails about the date and time of the Reverse Auction event. The Reverse auction event shall be conducted in the HPCL e-tender portal under link "Reverse auction".

2. Reverse Auction shall be available to Bidder only after two factor authentication. Initially vendor will login to the site https://etender.hpcl.co.in with his Login Id and password. Thereafter they shall click on the "Reverse auction" link in the portal to view/participate in ongoing/upcoming reverse auctions.

3. Brief procedure to participate in RA:

   I. Bidders may click on "Reverse Auction", followed by click on 'password' and Download the encrypted password.
   II. Save the downloaded password and open Signing Utility, Select action as "Decrypt Reverse Auction Password".
   III. Browse the downloaded file. Select appropriate certificate and click on Decrypt Password. Copy the password and paste in "Password" field and click on Reverse Auction.

4. HPCL will display Start Bid price i.e., Bench Mark price (which shall be the lowest of the price bids submitted by the bidders on the e-procurement portal i.e. 'Bids opened for RA event' and HPCL's in-house estimate), which shall be visible to all the vendors at the start of the Reverse Auction.

5. Identity of bidders never gets disclosed during reverse auction process

6. HPCL shall specify the minimum amount/percentage by which the bidders can reduce their bids at a time on the Reverse Auction Portal. This amount is referred as the 'bid decrement factor' and shall be specified by HPCL.

7. Bidders shall start bidding from this Bench Mark Price. The bidder can bid lower than the prevailing Lowest Bid at any time during the event by one decrement or multiples of the Bid decrement.

8. The bidder shall be able to view the following values on his screen along with the other necessary fields in the Reverse Auction:

   - Item-wise Leading Bid in the Auction (Delivered Cost)
   - Bid Placed by bidder (Delivered Cost)
   - Bid value contemplated by bidder before submission(Delivered Cost)

9. Bidder can reduce his bid repeatedly during the auction period
10. Bidders shall be provided information on item wise pro-rated reduction in the rates, for guidance.

11. Deleted

12. The Closing Price(s) offered by the bidders at the conclusion of the Reverse Auction shall be valid for a minimum period of 30 days or as mentioned in tender, from the date of conclusion of the Reverse Auction.

13. In case of Item-wise evaluation tenders, any or all items may undergo Reverse Auction separately at the discretion of HPCL.

14. In case of Schedule-wise evaluation tenders, any or all schedules may undergo Reverse Auction separately at the discretion of HPCL.

15. In case of SOR type tenders, where vendor has quoted a single percentage plus or minus against the offered rate, the decrement shall be applicable on the bench mark value on base of 100 (i.e. it could be 107 in case of plus 7% or 94 in case of minus 6 percent). This value shall be delivered cost i.e. inclusive of taxes and loading factor.

16. HPCL reserves right to conduct single reverse auction for multiple items with separate decrement option.

17. Vendor shall have option to participate in multiple reverse auction if it is scheduled at the same time.

18. Successful vendor shall be required to submit the final prices digitally signed and submitted as token of acceptance without any new condition other than those already agreed to before start of auction.

**Annexure – V**

## Address of Site Representatives of HPCL

| S.No | Location | Address | Location-in-charge (LIC) | Contact Person | Contact details |
|---|---|---|---|---|---|
| 1 | VVSPL-Visakha | VVSPL- Visakha: Hindustan Petroleum Corporation Limited: VVSPL, Visakha Dispatch Station, VR-ATP area, Naval Base Post,Visakhapatnam, Andhra Pradesh- 530 014 | Y V N SHARMA, DGM-VVSPL | C Pratap, Chief Manager- Maintenance | 0891-2858908 |
| | | | | Project Office | |
| | | | | K V Sreenivas Raju- Chief Manager- Projects | 0891-2858909 |
| | | | | SURYANARAYANARAJU N V - Senior Manager- Projects | 0891-2858902, Mob- +918885507755 |
| | | | | Vikram Singh- Manager- Projects | 0891-2858902, Mob- +918881702111 |
| | | | | Kilaru Vamsi Krishna- Senior Project Engineer | 0891-2858902, Mob- +919845262466 |
| 2 | IPS-1 | VVSPL, IPS-1: Hindustan Petroleum Corporation Limited VVSPL, Intermediate Pigging Station-1, M.B.Patnam (V), Nathavaram (M), Narsipatnam (T) Visakhapatnam Andhra Pradesh- 531 115 | | | |

| | | | | | |
|---|---|---|---|---|---|
| 3 | VVSPL-Rajahmundry | VVSPL- Rajahmundry: Hindustan Petroleum Corporation Limited, VVSPL, Rajahmundry Booster Station, Korukonda-Gokavaram Highway, Gummaladoddi Rajahmundry Andhra Pradesh - 533 289 | BANOTHU KRISHNA, Manager Operations | BANOTHU KRISHNA, Manager Operations | 0883-2496602 , 0883-2496595 |
| | | | | Project office -Komma Vikas Reddy | 09493568286 |
| 4 | IPS-2 | IPS-2:Hindustan Petroleum Corporation Limited VVSPL, CP station-115/ IPS-2 Guntupalli, Kamavarapukota, West Godavari Andhra Pradesh- 534 449 | | | |
| 5 | VVSPL-Vijayawada | VVSPL- Vijayawada: Hindustan Petroleum Corporation Limited VVSPL, Vijayawada Booster Station Kattubadipalem, Kondapalli Krishna District, Vijayawada Andhra Pradesh- 521 228 | RANJAN BHOWMICK , Chief manager-Operations | RANJAN BHOWMICK, Chief Manager-Operations | 0866-2872606 |
| 6 | VVSPL-Suryapet | VVSPL- Suryapet: Hindustan Petroleum Corporation Limited VVSPL, Suryapet Booster Station Imam pet village, Suryapet, Nalgonda District Andhra Pradesh- 508 213 | P ANAND VICTOR , Manager-Operations | P ANAND VICTOR, Manager-Operations | 08684-200558 |

| | | | | | |
|---|---|---|---|---|---|
| 7 | SV-17 | VVSPL, SV-17: Hindustan Petroleum Corporation Limited VVSPL, Sectionalizing valve station-17Bogaram village, Ramanapeta mandal Nalgonda District Telangana- 508 113 | | | |
| 8 | VVSPL-Ghatkesar | VVSPL- Ghatkesar: Hindustan Petroleum Corporation Limited VVSPL, Ghatkesar receiving station Ankushapur village, Ghatkesar,Rangareddy District Telangana- 501 301 | SURESH KUMAR R, Chief Manager-Operations | SURESH KUMAR R, Chief Manager- Operations | 040-939366689 |

**Annexure-X**

## BANK GUARANTEE FOR SECURITY DEPOSIT
## (On Non-Judicial stamp paper of appropriate value)

To :
Hindustan Petroleum Corporation Limited
(Address as applicable)

IN CONSIDERATION OF MESSRS. HINDUSTAN PETROLEUM CORPORATION LIMITED, a Government of India Company registered under theCompanies Act, 1956, having its registered office at 17, Jamshedji Tata Road, Bombay-20 (hereinafter called "The Corporation" (which expression shall include its successor in business and assigns) having placed an order on Messers ..... a partnership firm/sole proprietor business/a company registered under the Companies Act, 1956 having its office at ..... (hereinafter called "the supplier") (which expression shall include executors, administrators and assigns) vide order No..... dated..... (hereinafter called "the order" which expression shall include any amendments/alterations to "the order" issued by "the Corporation") for the supply of goods to/execution of services for "the Corporation" and "the Corporation" having agreed :

a. not to insist upon immediate payment of Security Deposit for the fulfilment and performance of the said order

b. that "the supplier" shall furnish a security for the performance of "the supplier's" obligations and/or discharge of "the supplier's" liability in connection with the said "order"; and "the Corporation" having agreed with "the supplier" to accept Bank Guarantee for the security deposit.

We, ..... Bank having office at ..... (hereinafter referred to as "the Bank" which expression shall includes its successors and assigns) at the request and on behalf of "the supplier" hereby agree to pay to "the Corporation" without any demur on first demand an amount not exceeding ₹ ..... (Rupees.....only) against any loss ordamage, costs, charges and expenses caused to or suffered by "the Corporation" by reason of non performance and fulfilment or for any breach on the part of "the supplier" of any of the terms and conditions of the said "order".

2. We, ..... Bank further agree that “the Corporation" shall be sole judge whether the said "Supplier" has failed to perform or fulfill the said "order" in terms thereof or committed breach of any terms and conditions of "the order" and the extent of loss, damage, cost, charges and expenses suffered or incurred or would be suffered or incurred by "the Corporation" on account thereof and we waive in the favour of "the Corporation" all the rights and defences to which we as guarantors and/or "the Supplier" may be entitled to.
3. We, ..... Bank further agree that the amount demanded by "the Corporation" as such shall be final and binding on "the Bank" as to "the Bank's” liability to pay and the amount demanded and "the Bank"undertake to pay "the Corporation" the amount so demanded on first demand and without any demur notwithstanding any dispute raised by "the Supplier" or any suit or other legal proceedings including arbitration pending before any court, tribunal or arbitrator relating thereto, our liability under this guarantee being absolute and unconditional.
4. We, ..... Bank further agree with "the Corporation" that "the Corporation" shall have the fullest liberty without our consent and without affecting in any manner our obligations hereunder to vary any of the terms and conditions of the said "order"/or to extend time of performance by "the Supplier" from time to time or to postpone for any time

to time any of the powers exercisable by "the Corporation" against "the Supplier" and to forbear to enforce any of the terms and conditions relating to "the order" and we shall not be relieved from our liability by reason of any such variation or extension being granted to "the Supplier" or for any forbearance, act or ommission on the part of "the Corporation" or any indulgence by "the Corporation" to "the Supplier" or by any such matter or things whatsoever which under the law relating to sureties would but for this provision have the effect of relieving us.

5. However, it has been agreed between "the Supplier" and "the Corporation" Bank Guarantee for security deposit is Valid upto a period of 3 (Three) months beyond the expiry of the defects liability period as per the terms of the Order No. _____ dated _____.
6. Not withstanding anything contained herein above :
   i. Our liability under this guarantee shall not exceed ₹ .....
   ii. This Bank Guarantee shall be valid upto and including .....; and
   i. We are liable to pay the guarantee amount or any part thereof under this Bank Guarantee only and only if you serve upon us a written claim or demand on or # *before the expiry of 30 days from the date of expiry of this guarantee*.

7. We, ..... Bank further undertake not to revoke this guarantee during its currency except with the previous consent of "the Corporation" in writing.
8. We, ..... Bank lastly agree that "the Bank"'s liability under this guarantee shall not be affected by any change in the constitution of "the Supplier".
9. “The Bank" has power to issue this guarantee in favour of "the Corporation" in terms of the documents and/or the Agreement/Contract or MOU entered into between "the Supplier" and "the Bank" in this regard.

IN WITNESS WHEREOF the Bank has executed this document on this

..... day of .....

For ..... Bank
(by its constituted attorney)
(Signature of a person authorised
to sign on behalf of "the Bank")*

**Annexure- Y**

## ARBITRATION CLAUSE

1) All disputes and differences of whatsoever nature, whether existing or which shall at any time arise between the parties hereto touching or concerning the contract, meaning, operation or effect thereof or to the rights and liabilities of the parties or arising out of or in relation thereto whether during or after completion of the contract or whether before after determination, foreclosure, termination or breach of the contract (other than those in respect of which the decision of any person is, by the contract, expressed to be final and binding) shall, after written notice by either party to the contract to the other of them and to the Appointing Authority hereinafter mentioned, be referred for adjudication to the Sole Arbitrator to be appointed as hereinafter provided.

2) The appointing authority shall nominate an officer/ retired officer of Hindustan Petroleum Corporation Limited (referred to as owner or HPCL) or a retired officer of any other Government Company in the Oil Sector of the rank of Chief Manager & above or any retired officer of the Central Government not below the rank of a Director to the Govt. of India, to act as the Sole Arbitrator to adjudicate the disputes and differences between the parties. The contractor/vendor shall not be entitled to raise any objection to the appointment of such person as the Sole Arbitrator on the ground that the said person is/was an officer (employee) and/or shareholder of the owner, another Govt. Company or the Central Government or that he/she has to deal or had dealt with the matter to which the contract relates.

3) In the event of the Arbitrator to whom the matter is referred to, does not accept the appointment, or is unable or unwilling to act or resigns or vacates his office for any reasons whatsoever, the Appointing Authority, shall nominate another person as aforesaid, to act as the Sole Arbitrator.

4) Such another person nominated as the Sole Arbitrator shall be entitled to proceed with the arbitration from the stage at which it was left by his predecessor.

5) It is expressly agreed between the parties that no person other than the Appointing Authority or a person nominated by the Appointing Authority as aforesaid, shall act as an Arbitrator. The failure on the part of the Appointing Authority to make an appointment on time shall only give rise to a right to a Contractor to get such an appointment made and not to have any other person appointed as the Sole Arbitrator.

6) The Award of the Sole Arbitrator shall be final and binding on the parties to the contract The work under the Contract shall however, unless suspended by the Owner, continue during the Arbitration proceedings and no payment due or payable to the concerned party shall be withheld (except to the extent disputed) on account of initiation, commencement or pendency of such proceedings.

7) The Arbitrator may give a composite or separate Award(s) in respect of each dispute or difference referred to him and may also make interim award(s) if necessary.

8) The fees of the Arbitrator and expenses of arbitration, if any, shall be borne equally by the Parties unless the Sole Arbitrator otherwise directs in his award with reasons. The lumpsum fees of the Arbitrator shall be ₹ 70,000/- per case for transportation contracts and

₹1,00,000/- for engineering contracts. Reasonable actual expenses for stenographer, etc. will be reimbursed. Fees shall be paid stage wise i.e. 25% on acceptance, 25% on completion of pleadings/documentation, and balance 50% on completion of arguments and receipt of award by the parties.

9) Subject to the aforesaid, the provisions of the Arbitration and Conciliation Act, 1996 or any statutory modification or re-enactment thereof and the rules made thereunder, shall apply to the Arbitration proceedings under this Clause.

10) The Contract shall be governed by and constructed according to the laws in force in India. The parties hereby submit to the exclusive jurisdiction of the Courts situated at _____ (say Mumbai*) for all purposes. The Arbitration shall be held at a place convenient to both parties and failing an agreement, the Arbitrator shall decide the venue. The Arbitration shall be conducted in English language.

11) The Appointing Authority is the Functional Director** of Hindustan Petroleum Corporation Limited.

(Note:- * = Delete the bracketed portions after mentioning the correct place. )

** Procurement Authorities may mention, the proper designation whether Director-Marketing or Director-Refineries.

## ARBITRATION CLAUSE IN FOREIGN PROCUREMENT AGREEMENTS

**There are two alternate clauses. Attempts will be made to use the first arbitration clause, failing which the second one will be used.**

**The first clause:**

1. All disputes or differences arising out of or in relation to this contract or on account of suspension or termination of the contract shall be settled by Arbitration in India. The arbitration shall be by a Sole Arbitrator appointed by HPCL. The Sole Arbitrator will adjudicate the disputes and differences between the parties except those in respect of which, the decision of any person is, by the contract expressed to be final and binding.

2. In the event of the Sole Arbitrator to whom the matter is originally referred to, is unable to act or he/she vacates the office, HPCL, shall nominate another Sole Arbitrator to settle the said disputes and differences.

3. The second Sole Arbitrator shall be entitled to proceed with the arbitration from the stage at which it was left by his/her predecessor. It is agreed between the parties that if HPCL fails to appoint an Arbitrator within 30 days of a reference made for appointment, then the Contractor/ Vendor shall write to the Chairman and Managing Director of HPCL stating about the failure and requesting for an appointment and the C&MD of HPCL shall then either appoint or ensure the appointment of a Sole Arbitrator.

4. The proceedings and award (to be in writing) shall be in English and the award shall be final, conclusive and binding on the parties to the contract subject to the provisions of the Arbitration & Conciliation Act, 1996, as in force in India and the rules made thereunder and for the time being in force. This contract shall be covered by the laws of India.

5. The award shall be made in writing and shall be published at the earliest.

6. The Sole Arbitrator shall be at liberty to appoint, if so necessary, any Accountant or Engineer or other person to assist him/her and act by the opinion so taken.

7. The Sole Arbitrator shall have powers to make one or more awards whether interim or otherwise in respect of the disputes and differences, and in particular, shall make separate awards in respect of each claim or cross claim of the parties.

8. The Sole Arbitrator shall be entitled to direct any of the parties to pay the cost of arbitration in such a manner and to such an extent as the Sole Arbitrator may in his discretion determine and shall also be entitled to require one or both the parties to deposit funds in such proportions to meet the arbitration expenses. The parties to arbitration, whenever called upon to do so, shall be bound to comply with such directions without any demur.
9. Notwithstanding anything contained to any other law, the parties hereby agree that

the courts in the city of_____(say Mumbai) alone shall have jurisdiction in respect of all or anything arising under this contract. except for moving the appropriate Court for enforcement of an award.

Note:-

i. The Appointing Authority is the Functional Director** of Hindustan Petroleum Corporation Limited

ii. Delete the bracketed portions after mentioning the correct place.

iii. Procurement Authorities may mention, the proper designation whether Director- Marketing or Director-Refineries.

**The second Clause**

1. All disputes or differences arising out of or in relation to this contract or on account of suspension or termination of the contract shall be settled by Arbitration in India. The arbitration shall be by a Sole Arbitrator appointed by the Indian Council of Arbitration (ICA), New Delhi, upon a reference by either of the parties. The Sole Arbitrator will adjudicate the disputes and differences between the parties except those in respect of which, the decision of any person is, by the contract expressed to be final and binding.

2. In the event of the Sole Arbitrator to whom the matter is originally referred to, is unable to act or vacates his office, then the ICA shall, on a request by either party, after hearing the other party, nominate another Sole Arbitrator in place of the earlier arbitrator.

3. The second Sole Arbitrator shall be entitled to proceed with the arbitration from the stage at which it was left by his predecessor.

4. The proceedings and award (to be in writing) shall be in English and the award shall contain reasons. Both parties shall be free to raise all their claims and counter claims before the Sole Arbitrator. The award shall be made at the earliest. The Sole Arbitrator shall have power to pass an interim award. The Award shall be on each claim and counter/ cross claim of the parties. The award shall be final, conclusive and binding on the parties to the contract subject to the provisions of the Arbitration & Conciliation Act, 1996, as in force in India and the rules made thereunder and for the time being in force. This contract shall be covered by the laws of India.

5. The Sole Arbitrator shall be at liberty to appoint, if felt necessary by him, any Accountant or Engineer or other person to assist him and act by the opinion so taken.

6. The Sole Arbitrator shall be entitled to direct any of the parties to pay the cost of arbitration in such a manner and to such an extent as the Sole Arbitrator may in his discretion determine and shall also be entitled to require one or both the parties to deposit funds in such proportions to meet the

arbitration expenses. The parties to arbitration, whenever called upon to do so, shall be bound to comply with such directions without any demur.

7. Notwithstanding anything contained to any other law, the parties hereby agree that the courts in the city of Mumbai* alone shall have jurisdiction in respect of all or anything arising under this contract , except for moving the appropriate Court for enforcement of an award.

# Chapter - 10

## TECHNICAL
## (MATERIAL REQUISITION No. : 14495-00-ME-REQ-0001)

Please refer Material Requisition No. 14495-00-ME-REQ-0001 which is attached in the tender.

WorleyParsons
resources & energy

# VVSPL CAPACITY AUGMENTATION PROJECT

# REQUISITION FOR MAINLINE CENTRIFUGAL PUMPS

Project No: 403102-14495

Document No: 14495-00-ME-REQ-0001

28 Feb 2017

I-Think Lodha Techno Campus,
5th Floor, Tower B,
Pokhran Road No. 2
Thane (West) – 400607
Tel: +91 2266515700
Fax: +91 2267818000

© Copyright 2017 WorleyParsons

# SYNOPSIS

This document presents Requisition for Mainline Centrifugal Pumps of the VVSPL Capacity Augmentation Project.

**Disclaimer**

This report has been prepared on behalf of and for the exclusive use of HPCL, and is subject to and issued in accordance with the agreement between HPCL and WorleyParsons India Pvt Ltd.

WorleyParsons India Pvt Ltd accepts no liability or responsibility whatsoever for it in respect of any use of or reliance upon this document by any third party.

Copying this report without the permission of HPCL or WorleyParsons is not permitted.

**VVSPL CAPACITY AUGMENTATION PROJECT**

| REV | DESCRIPTION | ORIG | REVIEW | WORLEY-PARSONS APPROVAL | DATE | CUSTOMER APPROVAL | DATE |
|---|---|---|---|---|---|---|---|
| A | Issued for Inter-Discipline Check | KAMY | HALS | KAVK | 27-Jan-2017 | | |
| B | Issued for Information | KAMY | RANS | KAVK | 13-Feb-2017 | | |
| C | Re-Issued for Information | KAMY | RANS | KAVK | 23-Feb-2017 | | |
| D | Re-Issued for Information | KAMY | RANS | KAVK | 28-Feb-2017 | | |

# CONTENTS

1 INTRODUCTION ..... 8
1.1 Project Background ..... 8
1.2 Process Requirement ..... 9
1.2.1 Main line Pump List ..... 9
1.3 Work Included ..... 10
1.4 Work Excluded ..... 13
1.5 Battery Limits ..... 15
1.5.1 Mechanical ..... 15
1.5.2 Electrical and Instrumentation ..... 15
1.6 Design Basis ..... 15
1.6.1 Pump Selection ..... 15
1.6.2 Design Life, Availability and Reliability ..... 16
1.6.3 Noise Limitation ..... 16
1.7 Material Certification ..... 16
1.8 Reference Documents ..... 16
1.8.1 British Standards (BS) ..... 17
1.8.2 American Standard Institute (ANSI) ..... 17
1.8.3 American Society and Mechanical Engineers (ASME) ..... 18
1.8.4 American Society for Testing and Materials (ASTM) ..... 18
1.8.5 American Petroleum Institute (API) ..... 18
1.8.6 The Institute of Petroleum (IP) ..... 19
1.8.7 ISO Standards (ISO) ..... 19
1.8.8 Manufacturers Standardisation Society (MSS) ..... 20
1.8.9 International Electrotechnical Commission (IEC) ..... 20
1.8.10 National Fire Protection Association (NFPA) ..... 21

1.8.11 Tubular Exchanger Manufacturers Association (TEMA) ..... 21
1.8.12 Occupational Safety and Health Administration (OSHA) ..... 21
1.8.13 Oil Industries Safety Directorate (OISD) ..... 21
1.8.14 Petroleum and Explosives Safety Organisation (PESO) ..... 21
1.8.15 UL (Underwriters Laboratories) ..... 21
1.8.16 Referenced Standard Specifications ..... 22
1.8.17 Referenced Data Sheets ..... 22
1.9 Conflicts, Deviations, and Amendments ..... 22
1.10 Vendor Exceptions ..... 23
1.11 Vendor Submissions ..... 23
1.12 Sub-Vendor Submissions ..... 23
1.13 Abbreviations ..... 23
2 TECHNICAL REQUIREMENTS ..... 25
2.1 General ..... 25
2.2 Pump Configuration ..... 26
2.2.1 Existing Pump Stations ..... 27
2.2.2 New Pump Stations: ..... 28
2.3 Mainline Pump Package Space Constraints in Existing Pump Stations ..... 28
2.4 Process and Operating Criteria ..... 29
2.5 Suitability of Pumps for Water Service ..... 30
2.6 Amendments, Supplements and Choices to API 610 ..... 30
2.7 Auxiliary Equipment and Connections ..... 36
2.8 Bearings and Bearing Housings ..... 37
2.9 Lubrication ..... 38
2.10 Balancing and Torsional Vibration ..... 38
2.11 Electric Motors and Variable Frequency Drives ..... 38
2.12 Machinery Protection System ..... 40
2.12.1 Vibration Switch ..... 41

2.12.2 Temperature Sensors (RTD Type) ..... 41
2.12.3 Seal Failure & Seal Leakage Detector ..... 42
2.12.4 Pump Suction and Discharge Pressures ..... 42
2.12.5 General ..... 42
2.13 Field Instruments Requirements ..... 42
2.13.1 Process Switches ..... 43
2.13.2 Alarms and Trips ..... 43
2.13.3 Level Measurement ..... 44
2.13.4 Pressure Measurement ..... 44
2.13.5 Temperature Measurement ..... 44
2.13.6 Pressure Gauges ..... 45
2.13.7 Gauge Range Requirements ..... 46
2.13.8 Temperature Gauges ..... 46
2.13.9 Thermowells ..... 46
2.13.10 RTDS ..... 47
2.13.11 Liquid Level Gauges ..... 47
2.14 Mainline Pumps Controls ..... 48
2.14.1 Unit Control Panel ..... 48
2.15 Monitoring System ..... 49
2.15.1 Overview ..... 49
2.15.2 Specific Technical Requirements ..... 49
2.15.3 Machine Monitor Requirements ..... 50
2.15.4 Temperature Monitors ..... 51
2.16 Pump Skid Instrument Installation ..... 52
2.17 Civil ..... 52
3 PROTECTIVE COATING ..... 53
4 SPARE PARTS AND SPECIAL TOOLS ..... 54
4.1 Spare Parts ..... 54

4.1.1 Spare Parts Required ..... 54
4.1.2 Information Required ..... 54
4.1.3 Contents ..... 54
4.2 Special Tools ..... 55
5 MARKING ..... 56
6 TESTING ..... 57
6.1 General ..... 57
6.2 Welds ..... 57
6.3 Castings ..... 57
6.4 Hydrostatic Tests ..... 58
6.5 Performance Test ..... 58
6.6 Complete Unit Test ..... 59
6.7 Mechanical Run Test ..... 59
6.8 Inspection and testing requirements (Instrumentation & PLC) ..... 60
6.8.1 Scope ..... 60
6.8.2 PLC Factory Acceptance Test (FAT) ..... 60
6.8.3 Composite Instrument System Test (CIST) ..... 66
6.8.4 PLC Site Acceptance Test (SAT) ..... 67
6.8.5 Test Documentation ..... 67
7 MATERIAL SOURCING TRACEABILITY AND CERTIFICATION ..... 68
8 PACKING, SHIPPING AND HANDLING ..... 69
9 INSPECTION, QUALITY ASSURANCE AND QUALITY CONTROL REQUIREMENTS ..... 70
10 SITE ACCEPTANCE TESTING AND COMMISSIONING ..... 72
11 PERFORMANCE GUARANTEE ..... 74
12 TRAINING ..... 75
13 VENDOR SUPPLIED DOCUMENTS ..... 76

## Appendices

APPENDIX 1 DATA SHEETS
APPENDIX 2 SPECIFICATIONS
APPENDIX 3 EXPERIENCE RECORD PROFORMA MOTORS VFD'S
APPENDIX 4 CHECK LIST FOR COMPLETION OF BID
APPENDIX 5 CHECK LIST FOR SCOPE OF SUPPLY OF PUMP
APPENDIX 6 EXPERIENCE RECORD PROFORMA PACKAGING
APPENDIX 7 GENERAL PAST REFERENCES OF PUMPS SUPPLIED WITH VFD'S
APPENDIX 8 EXPERIENCE RECORD PROFORMA PUMPS
APPENDIX 9 LOADING AND PENALTY CRITERIA
APPENDIX 10 MANDATORY SPARES FOR MULTI STAGE CENTRIFUGAL PUMPS
APPENDIX 11 VENDOR DATA REQUIREMENT LIST
APPENDIX 12 INTERFACE SIGNALS FOR MAINLINE PUMPS
APPENDIX 13 PROVEN TRACK RECORD
APPENDIX 14 VIJAYWADA MOTOR DATASHEET
APPENDIX 15 EXISTING PUMP PERFORMANCE CURVES
APPENDIX 16 PROPOSED PUMPING SCHEME
APPENDIX 17 PUMP SPACE CONSTRAINTS
APPENDIX 18 UCP SPACE CONSTRAINTS

# 1 INTRODUCTION

## 1.1 Project Background

Hindustan Petroleum Corporation Limited (hereinafter referred to as "HPCL") has appointed WorleyParsons India Pvt. Ltd. as EPMC for the project.

HPCL is currently pursuing to expand Vizag refinery from the current name plate capacity of 8.3 MMPTA to 15 MMTPA with a yield of 11.85 MMTPA for MS, HSD & SKO. In-line with refinery expansion plan, HPCL is also planning to take up capacity augmentation of existing VVSPL (Vizag Vijayawada Secunderabad Pipeline) from 5.38 MMTPA to 7.9 MMTPA simultaneously.

Capacity augmentation is proposed by implementation of new pump stations at existing IPS-1 (Ch. 92.9 km), IPS-2 (Ch. 264.5 km), SV-17 Station and also by upgrading the existing booster pump facilities in Vizag, Rajahmundry, Vijayawada, Suryapet and in Secunderabad. It also covers formulating and integration of new facilities with existing Electrical, Instrumentation, PLC, SCADA, APPS including LDS, OWS system, piping arrangements.

This specification details the general requirements for the Mainline Pump sets (API 610 11th Edition Centrifugal Pump) and is to be used in conjunction with the data sheets, drawings and specifications enclosed.

The Vendor shall be responsible for the design, materials, manufacturing, fabrication, assembly, painting, supply, quality assurance and quality control, inspection and testing, certification (as applicable), preparation for shipment, supply of documentation for the complete package, performance guarantee of complete package and site supervision during pre-commissioning and commissioning as described in this requisition, specification and attachments.

This specification does not dictate the detailed equipment design requirements. It is intended that this responsibility be retained fully by the Vendor so that Vendor's warranty remains fully in force and is not affected by statements herein.

The Mainline Pump Sets shall be complete including all ancillary equipment/items required to meet the design and environmental conditions as stated herein. Any additional part, equipment, material, etc., which are not specifically mentioned in this specification, but are required to make the supplied equipment/item complete in all respect in accordance with the intent of this specification, statutory requirements, applicable codes/standards, good engineering practices, and for safe and trouble-free operation, shall be deemed to be covered under the scope of this specification.

If national and/or local regulations exist in which some of the requirements may be more stringent than in this specification, the vendor shall determine by careful scrutiny which of the requirements are the more stringent and which combination of requirements will be acceptable as regards to safety, environmental, economic and legal aspects, in all cases the Vendor shall inform the Purchaser of any deviation from the

requirements of this specification which is considered to be necessary in order to comply with national and/or local regulations. The Purchaser may then decide to negotiate with the Authorities concerned with the object of obtaining agreement to follow this specification as closely as possible.

This specification also includes in the scope of vendor, tagging and preparation for overseas shipment of all equipment furnished.

## 1.2 Process Requirement

Capacity augmentation is proposed by implementation of new pump stations at existing Intermediate Pigging Stations, IPS-1, IPS-2, SV-17 and also by upgrading the existing booster pump facilities in Visakhapatnam, Rajahmundry, Vijayawada, Suryapet and in Secunderabad. It also covers formulating and integration of new facilities with existing E&I, SCADA, APPS including LDS, OWS system, piping arrangements, and tankage facilities at Vijaywada Booster Pump station.

The additional facilities listed in section 1.2.1 are proposed at existing VVSPL location to achieve maximum throughput of 7.7 MMTPA.

### 1.2.1 Main line Pump List

The equipment listed below shall be supplied in accordance with the requirements specified in this material requisition and the related documents as described in references:

| Sl. No. | Equipment Tag No. | Equipment Title | Qty | Working / Standby | Location | No. of VFD Required | UCP Required |
|---|---|---|---|---|---|---|---|
| | **Schedule -1** | | | | | | |
| 1. | 10-PA-CF-104 | Mainline Pump With Motor | 1 | 1W + 0S | Vizag Dispatch Terminal | 1 | One for pump |
| 2. | 20-PA-CF-103 | Mainline Pump With Motor | 1 | 1W + 0S | Rajahmundry Booster station | 1 | One for pump |
| 3. | 30-PA-CF-101 D | Mainline Pump With Motor | 1 | 1W + 0S | Vijayawada Booster station | 1 | One for pump |
| 4. | VFD for 30-PA-CF-101 A (900kW) | VFD For Existing Mainline Pump | - | - | Vijayawada Booster station | 1 | |

| Sl. No. | Equipment Tag No. | Equipment Title | Qty | Working / Standby | Location | No. of VFD Required | UCP Required |
|---|---|---|---|---|---|---|---|
| | **Schedule -2** | | | | | | |
| 5. | 15-PA-CF-101 A/B/C | Mainline Pump With Motor | 3 | 2W + 1S | IPS 1 (MB Patnam Booster station) | 3 | Common for all three Pumps |
| | **Schedule -3** | | | | | | |
| 6. | 25-PA-CF-101 A/B/C | Mainline Pump With Motor | 3 | 2W + 1S | IPS 2 (JK Gudem Booster station) | 3 | Common for all three Pumps |
| | **Schedule -4** | | | | | | |
| 7. | 45-PA-CF-101 A/B | Mainline Pump With Motor | 2 | 1W + 1S | IPS 3 (SV-17 Station) (Bogaram Booster station) | 2 | Common for all two Pumps |
| | **Schedule-5** | | | | | | |
| 8. | 40-PA-CF-102 A/B | Mainline Pump With Motor | 2 | 1W + 1S | Suryapet Booster station | 2 | Common for all two Pumps |

## 1.3 Work Included

The Scope of Work broadly covers the following.

The Vendor shall furnish all components and ancillary equipment necessary to make the equipment complete, safe, maintainable and ready for trouble free operation. The equipment scope shall include but not be limited to:

- Centrifugal Pump assemblies as listed in clause 1.2.1;
- Drive couplings along with coupling guards;

- Mechanical seal assemblies with seal flushing arrangement including all auxiliary items according to seal plan;
- Base plates for pump assemblies and drives along with necessary SS shims;
- Guarding around exposed rotating surfaces, of non-sparking material;
- Package and equipment lifting lugs;
- Earthing lugs;
- Dedicated Pump bearing lubrication systems, if required;
- Machinery protection system;
- Condition monitoring instrumentation and control system;
- Key phaser for direct measurement of RPM;
- Position sensor for vent and drain connections as explained in battery limit.
- Dedicated Unit Control Panel for Mainline pumps for each of the locations at Vizag, Rajahmundry and Vijaywada Pumping Station as per clause 1.2.1 above and as per the Technical Requirements as specified in this requisition;
- Combined Unit Control Panel for Mainline Pumps for each of the locations at IPS 1, IPS 2, IPS 3 and Suryapet pumping station as per clause 1.2.1 above and as per the Technical Requirements as specified in this requisition;
- Flameproof type Local start/stop panel (with start, stop push buttons, ammeter, indications for drive ON and drive 'READY TO START') complete with glands for each main line pump motor;
- Flameproof type LCS for lube oil skid motors (as applicable), with start, stop push button, ammeter (for motors rated above 5.5kW), local/remote selector switch, complete with glands;
- Automatic Minimum Recirculation Valves (ARV) for each pump .This ARV shall be supplied by vendor, to be installed by others. Orientation of ARV whether Horizontal or Vertical shall be communicated to successful bidder during course of order execution. Bidder to consider price of ARV accordingly. No cost escalation shall be entertained post order.
- Companion flanges along with necessary gaskets and stud bolts for all Battery Limit flanges (Pump suction flange, Pump discharge flange, Drain flanges, Vent Flanges, ARV flanges etc.), along with 200% spare gaskets & 10 % Spares, stud bolts and nuts;
- Flame proof electric motor drive with glands, differential CT etc., as specified in the specifications and datasheets enclosed with requisition;
- Variable frequency drive as listed in section 1.2.1 above along with converters, transformers, Cabling within VFD panel, etc. as specified in the specifications and datasheets enclosed with requisition;

Note that, an additional VFD for existing pump tag no. 30-PA-CF-101A at Vijaywada (Refer Sl. No.8 in clause 1.2.1) shall be procured as part of this Material Requisition. This VFD shall be provided with Modbus or Control NET protocol to communicate with existing UCP of Mainline Pump.
Necessary Hardware / Software for Modification / Upgradation in Existing UCP of Mainline Pump 30-PA-CF-101A for communication with new VFD shall be considered by pump vendor. Existing UCP details shall be furnished by HPCL to successful vendor after award of order.

- Lateral and Torsional critical speed analysis for pumps. Vendor shall consider necessary corrective action based on the same.
- Vibration monitoring system for Pump and Motor;
- Harmonic analysis study for VFD;
- Harmonic Pre commissioning test for VFD;
- Interface of UCP with station PLC & VFD;
- Earthing continuity for all equipment on the skid and provision for earthing at two locations;
- Any required cables and cabling within the skid /Package;
- Skid mounted Junction boxes for all skid mounted instruments;
- All instruments/controls which are required or are mandatory for safe & trouble free operation, along with necessary cabling up to skid JB including local start/stop panel;
- Inspection and performance testing of pump;
- Disassembly and reassembly of unit test pumps after completion of test work;
- Surface preparation, painting, protective coating and preservation;
- Design and supply Foundation bolts with nuts & jacking bolts;
- Design and supply of any hold down bolts, levelling bolts, shims etc.
- Certified lifting beams (if required), slings and shackles suitable for lifting each baseplate with a single point lift;
- Special tools for installation / operation / maintenance;
- Mandatory spares as listed in the attachments elsewhere in the MR.
- Spare parts for start-up and commissioning;
- Spares for 2 years operation and maintenance (if required – optional), however list shall be provided in technical bid;
- Packing of equipment for shipping to India;

- Transport from Vendors Ex-works to the FOB port of export (for Foreign bidders) / Transport from Vendors work to Site (for Indian Bidders);
- Supervision of Erection, Pre-commissioning & commissioning of the package;
- Training for operating personnel as required for the package - Price quote along with bid;
- Equipment performance guarantee;
- Operating and maintenance manuals;
- Information and data as indicated in Vendor Data Requirement List.
- Any interface for providing suitable differential CTs in VFDs and Motors shall be considered by package Vendor;
- Statutory approvals (like PESO/CPRI etc.) for combined testing of VFD and motor for all tags shall be considered by Vendor.
- Vendor shall incorporate Company comments without any cost implication to purchaser / Contractor during detail engineering. Based on Company comments purchaser will issue revise specifications for consideration of vendor.
- Anything not mentioned in above scope of work and required for the successful erection & commissioning, operation of equipment shall also be in Vendor's scope of supply without any cost implication to Purchaser.
- Vendor shall comply with the requirements of this requisition and attached specifications. Any deviation from the requirements given shall be detailed in "Deviation Schedule". In absence of such a list, quotation shall be deemed to be in full compliance with this requisition.

## 1.4 Work Excluded

The following is excluded from Vendors scope of work.

- Transport of all equipment to site from the FOB port of export.(only in case of foreign vendor)
- Unloading & storage at site.
- Installation of all equipment on site; however supervision of pre commissioning & commissioning is included in Vendor's scope of work.
- Supply and laying of cables between HV switchgears and VFD packages, between VFD packages and driven motors; between MCC (415V) and lube oil motors.
- Cabling between UCP panel and pump skid. And cabling between UCP panels and VFDs.
- Control cabling other than that between instruments on the pump set and the base plate mounted junction box.

- Pressure gauges and pressure transmitters on the pump suction and discharge.
- MCC for lube oil skid motors; however load details for lube oil skid motors at all locations shall be provided by Vendor.
- First fill of Lubricants & consumables. Vendor shall advice lubrication oil grade with required quantity along with bid. Vendor shall advice required consumables with quantity along with bid.

## 1.5 Battery Limits

The following battery limits shall apply to the Vendors scope of work:

### 1.5.1 Mechanical

- Underside of pump set base plates;
- Suction companion flange, discharge companion flange of pump and companion flanges for ARV;
- Underside of pump bearing pressure lube oil package (where applicable);
- Pump bearing housing Inlet and outlet lube oil connections (where applicable);
- Single outlet drain terminated with valve along with position sensor and vent terminated with valve along with position sensor, at the edge of the pump set base plates.

### 1.5.2 Electrical and Instrumentation

- Incomer terminals/ underside on the variable frequency drive panel;
- Mounting point of pump set local control stations;
- Instrument junction boxes mounted on the pump base plates.
- Earthing of all electrical equipment, motors, VFD panels, UCP.

## 1.6 Design Basis

Material requisition covers the complete design, materials, manufacturing, supply, inspection & testing, painting, quality assurance and quality control, supply to site and supervision of installation and commissioning of the Main Line Centrifugal Pumps to be supplied for Capacity Augmentation of VVSPL Project.

### 1.6.1 Pump Selection

The Vendor shall select pumps, drivers and pump configurations to meet the range of duty conditions, which are indicated in the data sheets.

The pumps shall be suitable for pumping multiple products batch transfer.

Products to be transported via VVSPL project pipeline are follows:

(1) Naphtha

(2) Motor Sprit (MS)

(3) Superior Kerosene Oil (SKO)

(4) Aviation Turbine Fuel (ATF)

(5) High Speed Diesel (HSD)

### 1.6.2 Design Life, Availability and Reliability

The overall availability and reliability of the complete package shall be demonstrated by the Vendor. The package design life shall be 35 years with an uninterrupted period of operation of 3 years without any major overhaul.

The Vendor shall identify any aspects of its standard components or packages that do not meet this requirement and submit descriptions to the Purchaser for consideration during the tendering process.

### 1.6.3 Noise Limitation

Noise levels of all equipment under normal operation shall not exceed an eight-hour equivalent continuous A-weighted sound pressure level, LAeq,8h, of 85 dB(A) at 1 metre in all directions. Sound level tests shall be performed to verify the same. In case noise test certificate shows a sound level exceeding 85 dB(A), necessary rectification/modification shall be done at Vendor's own cost and the pump set shall be re-tested to bring down the sound level to the specified limit.

Predicted noise levels shall be subject to approval by Purchaser.

The specified noise level should be attained without the use of orifices, mufflers, diffusers and/or credit for thermal or acoustic insulation where practical.

Noise attenuating enclosure is generally not preferred and shall be avoided. However, if used (subject to approval of Purchaser) shall be designed to provide full access to the equipment for maintenance and operation.

## 1.7 Material Certification

Pressure containing parts and shafting shall have material certification in compliance with BS EN 10204 type 3.1 and include original mill certificates or certified copies. Components shall be fully traceable back to the certificate.

Other parts shall be provided with certification to BS EN 10204 type 2.2.

## 1.8 Reference Documents

The design, fabrication and supply of pump sets shall comply with the applicable sections of the latest edition of the following codes and standards including their addenda.

### 1.8.1 British Standards (BS)

| Standard No. | Standard Title |
|---|---|
| BS 1041 | Code for temperature measurement. |
| BS 2765 | Specification for dimensions of temperature detecting elements and corresponding pockets |
| BS 3463 | Specification for observation and gauge glasses for pressure vessels |
| BS EN 50288-1 | Multi-element metallic cables used in analogue and digital communication and control. Generic specification. |
| BS EN 50288-7 | Multi-element metallic cables used in analogue and digital communication and control. Sectional specification for instrumentation and control cables. |
| BS 3693 | Recommendations for design of scales and indexes on analogue indicating instruments |
| BS 5308-1 | Instrumentation cables. Specification for polyethylene insulated cables |
| BS EN 10204 | Metallic materials. Types of inspection documents |
| BS EN 13190 | Dial thermometers |
| BS EN 60073 | Basic and safety principles for man-machine interface, marking and identification. Coding principles for indicators and actuators |
| BS EN 60079 – 0 to 11 | Electrical apparatus for potentially explosive atmospheres. General requirements |
| BS EN 60584 | Thermocouples. Reference tables |
| BS EN 60751 | Industrial platinum resistance thermometer sensors |
| BS EN 837-1 | Pressure gauges. Bourdon tube pressure gauges. Dimensions, metrology, requirements and testing |
| PD 5304 | Guidance on safe use of machinery |

### 1.8.2 American Standard Institute (ANSI)

| Standard No. | Standard Title |
|---|---|
| ANSI B40.1 | Gauges - Pressure Indicating Dial Type - Elastic Element |
| ANSI MC 96.1 | Temperature Measurement Thermocouples |

### 1.8.3 American Society and Mechanical Engineers (ASME)

| Standard No. | Standard Title |
|---|---|
| ASME B16.11 | Forged Fittings, Socket-Welding and Threaded |
| ASME B16.34 | Valves—Flanged, Threaded, and Welding End |
| ASME B16.5 | Pipe Flanges and Flanged Fittings |
| ASME B18.2.2 | Square and Hex Nuts |
| ASME B31.3 | Process Piping |
| ASME B46.1 | Surface Texture (Surface Roughness, Waviness and Lay) |
| ASME BPVC Section II | Materials |
| ASME BPVC Section V | Non-destructive Examination |
| ASME BPVC Section VIII | Rules for Construction of Pressure Vessels - Division 1 |
| ASME BPVC Section IX | Welding and Brazing Qualifications |
| ASME PTC 19.3 | Temperature Measurement |

### 1.8.4 American Society for Testing and Materials (ASTM)

| Standard No. | Standard Title |
|---|---|
| ASTM A194 | Standard Specification for Carbon and Alloy Steel Nuts for Bolts for High Pressure or High Temperature Service, or Both |
| ASTM A36 | Standard Specification for Carbon Structural Steel |

### 1.8.5 American Petroleum Institute (API)

| Standard No. | Standard Title |
|---|---|
| API 520 | Sizing Selection and Installation of Pressure Relieving Devices in Refineries |
| API 526 | Flanged Steel Pressure Relief valves |
| API 541 | Form-wound Squirrel-Cage Induction Motors - 500 Horsepower and Larger |

| Standard No. | Standard Title |
|---|---|
| API 547 | General-purpose Form-wound Squirrel Cage Induction Motors - 250 Horsepower and Larger |
| API 550 | Installation of Refinery Instruments and Control Systems |
| API 610 | Centrifugal Pumps for Petroleum, Petrochemical and Natural Gas Industries |
| API 614 | Lubrication, Shaft-sealing and Oil-control Systems and Auxiliaries |
| API 670 | Machinery Protection Systems |
| API 671 | Special Purpose Couplings for Petroleum, Chemical and Gas Industry Services |
| API 674 | Positive Displacement Pumps- Reciprocating |
| API 675 | Positive Displacement Pumps- Controlled Volume |
| API 676 | Positive Displacement Pumps- Rotary |
| API 677 | General-Purpose Gear Units for Petroleum, Chemical and Gas Industry Services |
| API 682 | Pumps—Shaft Sealing Systems for Centrifugal and Rotary Pumps |
| API RP 505 | Recommended Practice for Classification of Locations for Electrical Installations at Petroleum Facilities as Class I, Zone 0, Zone 1 and Zone 2 |
| API RP 551 | Process Measurement Instrumentation |
| API RP 686 | Recommended Practices for Machinery Installation and Installation Design |

### 1.8.6 The Institute of Petroleum (IP)

| Standard No. | Standard Title |
|---|---|
| IP 205/71 | Petroleum Measurement Manual Part V, Automatic Tank Gauging |

### 1.8.7 ISO Standards (ISO)

| Standard No. | Standard Title |
|---|---|
| ISO 1940 | Mechanical vibration -- Balance quality requirements for rotors in a constant (rigid) state |

| Standard No. | Standard Title |
|---|---|
| ISO 8310 | Refrigerated Light Hydrocarbon Fluids – Measurement of Temperature in Tanks Containing Liquefied Gases – Resistance Thermometers and Thermocouples. |

### 1.8.8 Manufacturers Standardisation Society (MSS)

| Standard No. | Standard Title |
|---|---|
| MSS SP-55 | Quality Standard for Steel Castings for Valves, Flanges and Fittings and Other Piping Components - Visual Method for Evaluation of Surface Irregularities |

### 1.8.9 International Electrotechnical Commission (IEC)

| Standard No. | Standard Title |
|---|---|
| IEC 73 | Specification for The Colour of Indicator Lights, Push Buttons, Annunciators and Digital Readouts |
| IEC 529 | Degrees of Protection Provided by Enclosures (IP Code) |
| IEC 60584-1 | Thermocouples – Part 1 : Reference |
| IEC 60584-3 | Thermocouples – Part 3: Extension and Compensating Cables – Tolerances and Identification system |
| IEC 60751 | Industrial Platinum Resistance Thermometers and Thermometers and Platinum Temperature Sensors |
| IEC 60034 | Rotating Electrical Machines |
| IEC 60060 | High Voltage Test Techniques |
| IEC 60072 | Dimensions and Output Series for Rotating Electrical Machines |
| IEC 60079 | Electrical Apparatus for Explosive Gas Atmospheres |
| IEC 60085 | Thermal Evaluation and Designation of Electrical Insulation |
| IEC 61972 | Method for Determining Losses and Efficiency of Three-phase Cage Induction Motors |
| IEC 61986 | Rotating Electrical Machines – Equivalent Loading and Super-position Techniques – Indirect Testing to Determine Temperature Rise |

### 1.8.10 National Fire Protection Association (NFPA)

| Standard No. | Standard Title |
|---|---|
| NFPA 77 | Recommended Practice on Static Electricity |

### 1.8.11 Tubular Exchanger Manufacturers Association (TEMA)

### 1.8.12 Occupational Safety and Health Administration (OSHA)

### 1.8.13 Oil Industries Safety Directorate (OISD)

| Standard No. | Standard Title |
|---|---|
| OISD-RP-110 | Recommended Practices on Static Electricity |
| OISD-STD-119 | Selection, Operation and Maintenance of Pumps |
| OISD-STD-123 | Selection, Operation and Maintenance of Rotary Equipment Components |
| OISD-STD-122 | Selection, Operation and Maintenance of Fans, Blowers, Gear Boxes, Agitators & Mixers |
| OISD-STD-125 | Inspection and Maintenance of Mechanical Seals |
| OISD-RP-126 | Specific practices for installations and maintenance of rotating equipment |
| OISD-STD-171 | Preservation of Idle Static & Rotary Mechanical Equipments |
| OISD-STD-141 | Design, Construction and Inspection Requirements For Cross Country Liquid Hydrocarbon Pipelines |

### 1.8.14 Petroleum and Explosives Safety Organisation (PESO)

### 1.8.15 UL (Underwriters Laboratories)

### 1.8.16 Referenced Standard Specifications

| Document No. | Document Title |
|---|---|
| 14495-00-EL-SPC-0009 | Specification for Induction Motor |
| 14495-00-EL-SPC-0010 | Specification for Variable Frequency Drive |
| 14495-00-IC-SPC-0005 | Specification for Field Instruments. |
| 14495-00-PE-SPC-0001 | Piping Material Specification |
| 14495-00-PE-SPC-0005 | Specification for External Painting and Protective Coating |

### 1.8.17 Referenced Data Sheets

| Document No. | Document Title |
|---|---|
| 14495-15-ME-DAS-0001 | Mechanical Datasheet for Mainline Pump at IPS#1 |
| 14495-25-ME-DAS-0001 | Mechanical Datasheet for Mainline Pump at IPS#2 |
| 14495-45-ME-DAS-0001 | Mechanical Datasheet for Mainline Pump at IPS#3 |
| 14495-10-ME-DAS-0001 | Mechanical Datasheet for Mainline Pump at Vizag |
| 14495-20-ME-DAS-0001 | Mechanical Datasheet for Mainline Pump at Rajahmundry |
| 14495-30-ME-DAS-0001 | Mechanical Datasheet for Mainline Pump at Vijaywada |
| 14495-40-ME-DAS-0001 | Mechanical Datasheet for Mainline Pump at Suryapet |
| 14495-00-EL-DAS-0010 | Data Sheet for High Voltage Induction motor |
| 14495-00-EL-DAS-0011 | Data Sheet for Medium Voltage Induction motor |
| 14495-00-EL-DAS-0012 | Data Sheet for High Voltage Variable frequency drive |

## 1.9 Conflicts, Deviations, and Amendments

Vendor's bid shall clearly state and list exceptions to this specification and all referenced documents. In the event of any conflict arising between this specification and other documents listed herein, refer comments to Purchaser for clarification before design or fabrication commences.

The order of precedence that applies is generally as follows:

- Purchase Order
- Data Sheets
- This Specification
- Referenced Drawings

- Project Specifications
- General Specifications
- Referenced Codes and Standards

## 1.10 Vendor Exceptions

Vendor's Bid shall clearly state and list exceptions/deviations under a separate section "exceptions/deviations" and all referenced codes and standards and all documents referred in this specification. Exceptions mentioned elsewhere in the bid or implied in the Bid shall be invalid.

## 1.11 Vendor Submissions

The Vendor's submissions shall provide sufficient data to allow the equipment to be evaluated against the total life of field costs to be incurred. In this respect, equipment capital cost, cost of spares and utility requirements shall be considered, as shall the cost of a proposed field life maintenance programme.

The Vendor shall submit full technical details of their standard equipment which best meets the requirements detailed herein. Aspects of the requirements that cannot be met shall be identified and the variances explained in a separate section under "exceptions/deviations" to bid document.

## 1.12 Sub-Vendor Submissions

Vendor shall be responsible for materials, engineering from their sub-vendors. Vendor shall be considered single point responsibility for the communication with their sub-vendors.

Vendor shall evaluate all his Sub-vendors offers and submit only one consolidated offer along with bid. The consolidated offer shall consist of one sub-vendor offered data per item which is fully or most technically compliant along with deviations (if any) in deviation list. Direct submission of multiple Sub-vendors offers and deviations shall not be accepted and Vendor's bid will be liable for rejection.

## 1.13 Abbreviations

| | | |
|---|---|---|
| API | : | American Petroleum Institute |
| ARV | : | Automatic Recirculation Valve |
| ASME | : | American Society of Mechanical Engineers |
| AWS | : | American Welding Society |
| BEP | : | Best Efficiency Point |
| BHN | : | Brinell Hardness Number |
| BS | : | British Standard |
| dB | : | Decibels |
| DCS | : | Distributed Control System |

| | | |
|---|---|---|
| DOL | : | Direct Online |
| DPT | : | Differential Pressure Transmitter |
| HMI | : | Human machine Interface |
| HV Motor | : | High Voltage Motor |
| IEC | : | International Electro-technical Commission |
| IPS | : | Intermediate Pumping Station |
| IS | : | Indian Standards |
| ISO | : | International Organization of Standardization |
| MAWP | : | Maximum Allowable Working Pressure |
| MCSF | : | Minimum Continuous Stable Flow |
| MDMT | : | Minimum Design Metal Temperature |
| MR | : | Material Requisition |
| MV Motor | : | Medium Voltage Motor |
| NFPA | : | National Fire Protection Association |
| NPSH | : | Net Positive Suction Head |
| NPSHA | : | Net Positive Suction Head Available |
| NPSHR | : | Net Positive Suction Head Required |
| OISD | : | Oil Industry Safety Directorate |
| P&ID | : | Piping & Instrumentation Diagram |
| PLC | : | Programmable Logic Controller |
| RTD | : | Resistance Temperature Detectors |
| SCADA | : | Supervisory Control And Data Acquisition |
| SI | : | International System of Units |
| SS | : | Stainless Steel |
| SV | : | Sectionalization Valve |
| UCP | : | Unit Control Panel |
| UPS | : | Uninterruptible power supply |
| VFD | : | Variable Frequency Drive |
| VMS | : | Vibration Monitoring System |
| WNRF | : | Weld Neck Raised Face |
| RTJ | : | Ring Type Joint |
| WRC | : | Welding Research Council |

# 2 TECHNICAL REQUIREMENTS

The pumps including baseplate, driver and all other ancillary equipment shall be in accordance with the latest edition of the API 610 / ISO 13079 “Centrifugal Pumps for Petroleum, Heavy Duty Chemical and Gas Industry Service” plus as amended by the comments on the subsequent Sections this specification including referenced standards, specifications, datasheets and drawings enclosed.

The Vendor shall comply with applicable Indian Federal, State or Local codes, regulations, ordinances, and rules.

## 2.1 General

The pumps shall be of manufacturer’s standard proven design and be suitable for a continuous service life in a high-pressure liquid hydrocarbon medium.

The pumps and their component parts shall be manufactured to controlled tolerances to assure complete inter-changeability with similar pumps in the station.

The Vendor shall offer pumps from an existing manufacturing range which shall be a unit of the same size and design which has a successful record of proven field service at operating conditions similar in terms of power rating, hydraulic performance including NPSH3, inlet flow, differential head, operating pressure and temperature, pumping liquid, speed, number and type of impellers, mechanical design and materials of construction.

The pumps shall be designed for continuous duty 24 hours per day, 365 days per year (excluding scheduled maintenance downtime) in a covered location.

The site environmental conditions for the pump station site are detailed in datasheets.

Each pump shall be mounted on a base plate complete with the following ancillary equipment:

- Drive motor;
- API mechanical seal pressurisation unit; along with air fin cooling system ( If required). Vendor shall specify the requirement of air fin cooling system (if required) along with electrical load in the bid.
- Dedicated pump bearing lubrication system (If Required)
- Junction boxes for machinery protection and condition monitoring instrumentation cabling;
- Junction boxes for the instrumentation mounted on the pump skid.

Lube oil system for each pump unit shall be individual and dedicated, and preferably mounted on the pump skid complete with all piping.

Where pump shaft bearings are connected to a pressure lube oil system, and is impractical to mount the same on the pump skid, a separate lube oil system skid may be provided and the same shall be installed close to the pump. All interface piping and cabling shall be supplied for dedicated lube oil system. (Vendor

shall highlight the requirement of separate lube oil skid in the bid. Vendor shall check the availability of space for the pump package as specified in this requisition.

Size of the pump packages in the existing pump stations at Vizag, Rajahmundry, Vijaywada and Suryapet, shall be such that, complete pump package including pump, electric motor, lube oil skid (if required) shall be installed in the available space in the existing pump house. Refer the clause 2.3 of this requisition.

Materials of construction shall be suitable for the chemical and physical properties of the hydrocarbon fluids to be pumped. The physical properties of the fluids are detailed in the data sheets.

The pump drive train including shaft shall be adequately sized and shall be designed for a minimum design factor of 1.5 at maximum load.

Where possible lifting lugs shall be provided to facilitate disassembly of the pumps.

Pump casing MOC shall be Killed Carbon Steel instead of carbon steel as API 610. All other pump part materials shall be in accordance with API 610 Table-H and shall be as specified in the data sheets. For pump parts not designed as full compliance materials in Table-H, Vendors shall get Purchaser's prior approval.

As part of the review process, the Vendor shall comment on the Purchaser's piping and foundation drawings associated with the pump sets being supplied.

The Vendor shall indicate in the bid the minimum pump speed for adequate cooling of the drive motor.

The pumps may be subject to dead head conditions (zero flow, maximum head), due to accidental closure of the discharge valves or any other reason. The Vendor shall indicate in the bid documentation the maximum time period that the pumps can operate under dead head conditions.

The Vendor shall also advise thermal limitations of the pump across the entire operating range including dead head (zero flow, maximum head) flow conditions. The Vendor shall also specify the temperature rise across the pump under minimum stable continuous flow conditions.

The Vendor shall supply performance curves for the proposed pumps in the bid. The pump performance curves shall be furnished at 200 rpm increments between the minimum and maximum speeds selected by the Vendor.

## 2.2 Pump Configuration

Pumps shall be provided for existing stations ( viz. Visakhapatnam (Vizag)), Rajahmundry, Vijayawada, Suryapet ) and new pump stations (Viz. MB Patnam Booster Station (IPS-1), JK Gudem Booster Station (IPS-2) , Bogaram Booster Station (IPS-3)).

Refer the attached proposed scheme for the pumps configuration (Appendix 16).

### 2.2.1 Existing Pump Stations

#### 2.2.1.1 VISAKHAPATNAM (VIZAG) PUMP STATION:

In Visakhapatnam existing one train of three pumps (2 Working +1 Standby) -Pump tag nos. 10-PA-CF-102 A/B/C- running in parallel to each other.

Another existing one train of three pumps (2 Working + 1 Stand by) – Pump tag nos. 10-PA-CF-103 A/B/C running in parallel to each other.

These both trains are in series to each other.

New proposed pump 10-PA-CF-104 shall run in parallel to the series combination of both existing pumps.

Control Valves are provided to isolate existing pumps and new pumps.

Pump performance Curves of existing pumps are attached in Appendix – 15.

Vendor to ensure new pump selection shall be suitable with existing pumps system for smooth operation of entire pumping system.

#### 2.2.1.2 RAJAHMUNDRY PUMP STATION:

In Rajahmundry existing one train of three pumps (2 Working +1 Standby) -Pump tag nos. 20-PA-CF-101 A/B/C- running in parallel to each other.

Another existing one train of three pumps (2 Working + 1 Stand by) – Pump tag nos. 20-PA-CF-102 A/B/C running in parallel to each other.

These both trains are in series to each other.

New proposed pump 20-PA-CF-103 shall run in parallel to the series combination of both existing pumps.

Control Valves are provided to isolate existing pumps and new pumps.

Pump performance Curves of existing pumps are attached in Appendix – 15.

Vendor to ensure new pump selection shall be suitable with existing pumps system for smooth operation of entire pumping system.

#### 2.2.1.3 VIJAYWADA PUMP STATION:

In Vijaywada existing train of three pumps (2 Working +1 Standby) - Pump tag nos. 30-PA-CF-101 A/B/C- running in parallel to each other.

New proposed pump 30-PA-CF-101 D shall run in parallel to existing pumps.

Pump performance Curves of existing pumps are attached in Appendix – 15.

Vendor to ensure new pump selection shall be suitable with existing pumps system for smooth operation of entire pumping system.

An additional VFD for existing pump tag no. 30-PA-CF-101 A at Vijaywada shall be supplied as part of this Material requisition. Existing Electric Motor datasheet is attached in Appendix- 14.

#### 2.2.1.4 SURYAPET PUMP STATION:

In Suryapet existing train of two pumps (1 Working +1 Standby) - Pump tag nos. 40-PA-CF-101 A/B- running in parallel to each other.

In new pump schematic, existing pump 40-PA-CF-101 B shall be arranged in series to the existing pump 40-PA-CF-101 A.

New pumps 40-PA-102 A/B will be in parallel to each other and shall run parallel to the series combination of the Existing Pumps.

Control Valves are provided to isolate existing pumps and new pumps.

Vendor to ensure new pump selection shall be suitable with existing pumps system for smooth operation of entire pumping system.

### 2.2.2 New Pump Stations:

#### 2.2.2.1 IPS-1

Three new pumps (2 Working +1 Standby) – Pump Tag Nos. 15-PA-CF-101 A/B/C shall be installed parallel to each other.

#### 2.2.2.2 IPS-2

Three new pumps (2 Working +1 Standby) – Pump Tag Nos. 25-PA-CF-101 A/B/C shall be installed parallel to each other.

#### 2.2.2.3 IPS-3

Two new pumps (1 Working +1 Standby) – Pump Tag Nos. 45-PA-CF-101 A/B shall be installed parallel to each other.

## 2.3 Mainline Pump Package Space Constraints in Existing Pump Stations

**Pump Space Constraints:**

Refer sketches in Appendix -17 indicating available space in existing pump stations ( Vizag, Rajahmundry, Vijaywada, Suryapet) for installation of new pumps. Vendor shall select entire pump package (Pump + Motor

+ Lube oil system (if required) etc.) so that pump package shall be installed in the available space with all tolerances and space required for the suction and discharge piping.

**VFD Space Constraints:**

Refer datasheet for Variable Frequency Drives for space limitations for new VFDs at existing locations (Vizag, Rajahmundry, Vijaywada and Suryapet). Vendor shall select VFD subvendor based on dimensions of VFDs which can be installed in limited space alongwith recommended clearance (By VFD Vendor) at existing locations.

**UCP Space Constraints:**

Refer the sketches in Appendix -18 indicating the space limitations in the existing Control Stations at existing locations (Vizag, Rajahmundry, Vijaywada and Suryapet). Vendor shall select UCP subvendor based on dimensions of UCPs which can be installed in limited space alongwith recommended clearance (By UCP Vendor) at existing locations.

## 2.4 Process and Operating Criteria

The Vendor shall optimise pump selection (where possible) around the “Normal Operating Flow Range” envelope. The pump efficiency for each duty point in the “Normal Operating Flow Range” which are defined in the data sheet shall be indicated in the bid.

The pumps shall be selected such that:

- Over the “Normal Operating Flow Range” the duty point is close to the best efficiency point as far as practicable.
- Curves shall rise continuously to shut off from the rated flow duty point. The head rise shall not exceed the percentage specified.

All NPSHA values on pump data sheets are referenced to the suction nozzle centreline. The NPSH3 shall be lower than the NPSHA over the full operating range of the pump.

The Vendor shall note that the lower density fluids have the higher vapour pressures and will dictate the lower limit for NPSH available.

The suction specific speed ($N_{ss}$), calculated at the best efficiency point (BEP) for the maximum impeller diameter of the casing, shall not exceed 12800 SI Units (11000 US Units). Pumps offered with suction specific speed > 12800 SI Units (11000 US Units) may be accepted subject to Purchaser’s written approval. Pumps with $N_{ss}$ < 10,000 SI Units will be preferred. Pumps fitted with inducers are not acceptable.

Proposal performance curves, NPSH curve and power curve shall contain curves for minimum, rated and maximum impeller diameters.

Each main line pump station has “(N+1)” pumps that will normally operate with “N” online and one on standby. The standby pump will be rotated on a regular basis. All the pumps, as part of this requisition,

shall be powered using VFD power supplies. The operational pumps will always run with the same duty point.

Vendor to note that the suction of each pump will be provided with a T- type Strainer (by others) of 40 mesh nominal rating. Hence the pump offered by the vendor shall be suitable for a fluid with particle size that may pass through a 40 mesh nominal rating strainer and 20 mesh during commissioning. Vendor shall consider this aspect while designing and selecting the material of construction (MOC).

## 2.5 Suitability of Pumps for Water Service

Pump shall be utilized to flush the pipeline with potable water (Chloride content max. 500 ppm). During this operation the flow rate shall be controlled to ensure the power requirement is below the motor rating selected for the specified rated condition for HSD product. The pump shall be suitable for this intended intermittent service.

## 2.6 Amendments, Supplements and Choices to API 610

The amendments, supplements and choices to API 610 / ISO13709 given in this Section are directly related to equivalent sections and paragraphs in API 610. For clarity, the section and paragraph numbering of API 610 has been used as far as possible.

Only amendments, supplements and choices have been stated hereafter. All other paragraphs and clauses which have not been mentioned shall be considered unchanged and shall be applied as stated in API 610 and references mentioned therein.

API 610 Paragraph no.:

3 Terms and definitions

3.65 (New)

‘Supplement' adds the requirement following this term to the referenced API Standard requirement. A supplement does not change the API Standards requirement.

3.66 (New)

‘Amendment' changes the API Standard requirement to that which follows the term. All parts of the API Standard requirement, which are not addressed, remain applicable.

3.67 (New)

'Choice' provides direction for choices, which are specified by the API Standard paragraph. Parts of bulleted paragraphs, which do not require decisions, are fully applicable.

6.1.2 (Amendment)

Vendor to note there is no cooling water available in the plant. Vendor to consider air cooling for any cooling requirement.

6.1.8 (Supplement)

The Net Positive Suction Head Available (NPSHA) shall exceed the Net Positive Suction Head Required (NPSH3) by at least 1 m throughout the range from minimum continuous stable flow up to end of curve.

6.1.11 (Choice / Supplement)

Paragraph shall apply as below.

Pumps on non-parallel operation shall have stable head/capacity curves, which continuously rise by at least 5% from rated capacity to shut-off. Pumps in parallel operation shall have a head rise from the rated point to shut-off not less than 10%.

6.1.14 (Choice / Supplement)

Paragraph shall apply.

The maximum sound pressure level shall be as specified under Section 'Noise Limitation' elsewhere in this specification.

6.1.15 (Supplement)

The numbers of vanes in impellers shall be different to the numbers of vanes in diffusers. On pumps with two or more stages impellers/diffuser configuration shall be staggered to avoid coincidence of pressure pulses.

6.1.17 (Amendment)

Vendor to note there is no cooling water available in the plant. Any cooling system shall be air cooled.

6.1.35(New)

The Vendor shall advise the minimum and maximum allowable safe flows for all proposed pumps for continuous operation, considering temperature rise, vibration limits and NPSH limits. Vendor shall indicate "preferred operating range" and "allowable operating range" on the pump characteristic curve for rated speed and lowest operating speed corresponding to the low flow-low head operating point.

6.1.36 (New)

For balancing axial thrust in multi-stage pumps, only the following arrangements shall be used, either alone or in combination:

- Individually-balanced impellers or opposed arrangements of impellers;

- A balancing piston (considering the subject service fluid is non-abrasive);

Balance disk or combinations with a balance disk shall not be used.

6.3.6 (Choice)

All parts referred to in the definition of pressure casing (3.42) shall have the same MAWP.

6.4.2.1 (Amendment)

All pumps shall have flanged suction and discharge nozzles of equal ASME pressure/temperature ratings.

6.4.3.1 (Amendment)

Threaded connections to the pressure casing shall not be used, except that the seal gland connection may be threaded.

6.4.3.4 (Amendment)

All auxiliary connections to the pressure casing shall be fitted with flanged stubs. Integral flanges may be used. If the pump nozzles are Class 900 or above, or the pumping temperature is 0°C (32°F) or below, or if the pump is for hazardous service, or if ISO 15156 or NACE MR0103 is applicable, then socket welded connections shall not be used. In these cases full penetration butt welded connections are required.

6.4.3.9 (Supplement)

Valves shall not be welded to the pump.

6.4.3.11 (Supplement)

Openings shall not be furnished unless they are essential, in which case they shall be located away from high-velocity areas. The provision and location of openings shall be identified in the vendor's proposal and shall be subject to the approval of the Purchaser. All openings furnished and not connected to piping shall be closed with a flange. Balance leak off lines and their connections shall be flanged. Unions shall not be used.

6.4.3.14 (Supplement)

Pumps shall preferably be self-venting. If this is not possible, then external vent connections in volute(s) and, if necessary, in seal areas shall be provided. Both drain and vent connections shall be welded and provided with flanged connection and valve. In case of multiple vents/drains, each shall be manifold to single-flanged and valved connection. Piping shall terminate in ANSI flanges, of the same rating as the pump discharge nozzle at the baseplate edge.

6.5.1 (Amendment)

Allowable Nozzle loads and moments shall be 2 times of the figures given in API 610 / ISO 13709 Table 4. Vendor shall ensure that base plates are also suitable for withstanding above loads.

6.6.15 (New)

Preferably the pump selection shall be such that their rated impeller diameters not greater than 90% of the maximum diameter impeller and not less than 110% of the minimum impeller diameter that the casing will take.

6.7.2 (Amendment / Supplement)

The pump casing wear rings shall be manufactured from material which ideally has a Brinell hardness preferably 100BHN (but not less than 50BHN) greater than the impeller wear rings in their finished state. For wear ring materials with higher galling tendencies, if increased running clearances are considered necessary, efficiencies quoted shall be based on the higher running clearances.

6.7.3 (Amendment / Supplement)

The pump casing and impeller wear rings shall be held in place by setscrews. Tack welding is not acceptable.

6.8.1 (Supplement)

Pumps shall be equipped with mechanical seals conforming to API 682. Mechanical seals shall be offered and supplied from one of the following makes viz. **Flowserve / Eagle Industries / John Crane / Burgmann.**

A double mechanical seal system with unpressurised buffer fluid shall be used. Mechanical Seal Plan 31,52,65 is envisaged for this service. Seal vendor shall check and suggest the seal plan considering operating parameters and liquid characteristics. Seal vendor recommendation shall be submitted along with bid. A pressure and level transmitter to sense primary seal failure shall be installed. The seal manufacturer shall formally approve for each pump the following:

- The seal selection
- The seal flush plans
- The seal metallurgy
- The seal system
- The seal installation
- Special features (such as multi point injection)
- The proposed method of operation

The pump Vendor shall be responsible for obtaining this approval from the seal manufacturer and submitting to Purchaser for review.

The pump Vendor shall furnish the seal manufacturer with the pump data sheet and also the project and pump identification numbers for each pump, in order that the seal manufacturer may prepare for the Purchaser a complete seal schedule and interchangeability chart.

Compatible buffer / barrier fluid for the intended service and the characteristics shall be specified by seal manufacturer. Combined heat load (heat soak and seal face generated heat) calculation shall be furnished by seal manufacturer. Cooling requirements / seal flush rates for restricting to the maximum allowable rise in temperature of 5°C shall be specified by Vendor based on heat load calculation. Vendor shall quote closed loop seal cooling system either with finned coil with air cooling.

Vendor to note there is no cooling water available in the plant. Any cooling system shall be air cooled.

All components of seals and seal systems shall withstand the maximum discharge pressure and the maximum allowable temperature. The pump Vendor shall advise in their bid the maximum dynamic and static sealing pressure and temperature.

The pump Vendor shall supply and install all mechanical seal piping and appurtenances to make a complete operational seal system.

6.9.2.2 (Supplement)

Vendor shall perform a transient (as well as steady state) torsional critical speed analysis for sub-sections (c) and (d) of the clause.

6.9.2.10 (Choice)

Paragraph will apply when specified on the data sheet.

When a torsional analysis is performed the Vendor shall furnish a detailed report.

6.9.3.6 (Supplement)

For vertical, close-coupled, in-line pumps vibration readings shall be taken on both bearings for the electric motor driver in the horizontal plane at 90° to each other. For vertical pumps with a flexible coupling additional readings shall be taken at the pump top bearing.

6.10.1.2 (Supplement)

When hydrodynamic thrust bearings are proposed, the pump hydraulic design shall be such that the axial loads are unidirectional under all operating conditions. Vendor shall submit with bid, curves showing the variation of axial load with capacity (zero flow to 120% BEP) for design internal clearances and two times design internal clearances. For variable frequency units, similar curve for maximum speed and minimum speed shall be submitted.

6.10.2.5 (Amendment)

Vendor to note that there is no cooling water available in the plant. In case of any Lube oil cooling requirement, vendor shall achieve the same using air cooling.

6.12.2.5 (Choice/Supplement)

For casting repairs made in the vendor's shop, repair procedures including weld maps shall be submitted for approval to Purchaser. The Purchaser's approval is required before proceeding with repair. Repairs made at the foundry level shall be controlled by the casting material specification.

7.2.2 (Supplement)

Pump couplings shall be supplied by the pump Vendor. Flexible all-steel couplings shall be provided for all pumps. Rigid all-steel, axially adjustable, couplings shall be supplied for vertical pumps with bearings integral with driver. The complete pump coupling shall be supplied fully machined by the pump Vendor and shipped with the pump. Couplings shall be rated for the maximum transient torque which can be expected in the case of a short circuit at the motor terminals and rapid automatic reconnection of the motor with full opposite residual voltage, under full load conditions.

7.2.13 (Supplement)

Coupling guards shall be of non-sparking material and shall conform to BS PD 5304. Aluminium is not accepted as a non-sparking material.

7.3.13 (Choice/Supplement)

The baseplate and pedestal support assembly shall be sufficiently rigid to be mounted without grouting. Baseplate design shall allow the motor cable entry from below or side of the motor terminal box. The base frames shall be designed to prevent retention of liquid, dust and shall be self-draining.

7.5.1.2 (Supplement)

Piping shall be used for auxiliary systems. Seamless pipe of ASTM A 312, Type 316L shall be used if maximum pumping temperature is above 260 °C (500 °F) or if the auxiliary system contains erosive fluid.

Pipe shall be used for all auxiliary systems, except for air/water coolers and barrier/buffer gas systems, which may be made using stainless steel seamless tubing.

Insulation or guarding shall be provided as an integral part of the auxiliary piping system to provide personnel protection if the non-insulated metal temperature exceeds 70°C (160 °F) and the auxiliary piping system is in an area where it can be touched during normal operation and maintenance activities.

7.5.1.6 (Choice)

Each piping system shall be manifolded to one purchaser's connection (inlet or outlet); these connections shall be terminated with proper rated flange at the end of baseplate/skid, and within the confines of the baseplate/skid.

7.5.2.8 (Amendment)

Flanges shall be used instead of socket-welded unions.

8.3.3.3. (Supplement)

If a spare rotor and / or complete inner assembly for multistage pumps is supplied with the pump, it shall be subject to the same running/performance tests in the pump casing as the main rotor.

8.3.3.5b) (Supplement)

Bearing housing temperature shall be measured at all five points of the performance test, except closed valve. For pump powers greater or equal to 100 kW, pump shall be run until oil temperature stabilizes at rated condition.

8.3.4.3 (Supplement)

An NPSH test shall be performed in the following cases:

(i) For pumps, if the difference between NPSHA and NPSH3 is less than 2 m (6 ft);

(ii) For pumps handling liquids containing dissolved gas;

(iii) For pumps with a suction specific speed above 12800 SI Units (11000 US Units);

(iv) For pumps, if the difference between NPSHA and NPSH3 at 120% of rated flow is less than 1 m (3 ft);

## 2.7 Auxiliary Equipment and Connections

Where required or when specified on equipment data sheets, lube oil and auxiliary process piping systems including accessories such as gauges and valves, shall be supplied fully assembled and installed & wired till package boundary limit.

All flushing piping and accessories shall be provided. All parts of the flushing system shall be equal to or better than the pump casing material, and shall be suitable for maximum discharge pressure and temperature.

Following connections and auxiliary equipment shall be supplied as a minimum:

- Pump casing drains and piping;
- Pump venting points and piping;
- Pump case temperature RTD connection; and
- Bearing temperature and vibration connections.
- Baseplate drain and piping

All pump vents and drains shall be provided with an isolating valve piped to the base plate edge. Drain valve and vent valve shall be provided with position sensors. Interlocks for the position sensors shall be considered in UCP.

## 2.8 Bearings and Bearing Housings

Steel bearing housings shall be provided. Tilting pad or plain type impeller shaft thrust bearings are preferred over anti-friction roller bearings. When hydrodynamic thrust bearings are supplied, the Vendor shall demonstrate that thrust loading does not exceed 50% of the bearing continuous rating. The Vendor shall provide a procedure on how this criterion will be demonstrated.

Sleeve journal impeller main shaft bearings are preferred over anti-friction bearings. If antifriction bearings are specified the use of a metal cage is mandatory and shall be made from brass. When anti-friction roller bearings are offered as an alternative to sleeve journal type bearings, the Vendor shall state the $B_{10}$ bearing life under the rated load and under maximum load conditions. The Vendor shall also indicate the benefits of specifying anti-friction roller bearings.

The Vendor shall describe in detail the selected bearing lubrication systems in the bid.

When required, the lube oil system for each pump unit shall be individual and dedicated, and preferably mounted on the pump skid complete with all piping. The lube oil system shall be as per API-610. Pressure lube oil system if required shall be as per API 614 general-purpose system (ISO 10438-3) class III. If the drive motor for the mainline pump also requires pressure lube oil system, then the pressure lube oil system for the pump and the motor may be common. The pressure lube oil system shall have individual motor driven duty and standby pumps, coolers and filters. The lube oil system shall be sized to cope with the additional load of future pump upgrades to meet the requirements of all flow rates. The pressure lube oil system shall have following instrumentation as a minimum:

- Pressure relief valves as required
- Pilot operated pressure control valves as per requirement.
- Pressure gauges as per requirement.
- Restrictive orifices (RO) as pre requirement.
- Pressure transmitters for alarm (PSL / PSLL) and for trip etc.
- Temperature transmitters for lube oil reservoir
- Temperature transmitters for start-up of stand by cooling fan.
- Level gauge for lube oil reservoir.
- Level transmitters (LSL) for lube oil reservoir.
- Lube oil heater with thermostat control
- DPG & DPT across duplex lube oil filters.
- Flow gauge, temperature gauge and “no flow switch” for each lube oil return line from each bearing.
- Temperature gauges at other places as per requirement.
- PT and TT on lube oil header shall be provided.

All the above information of transmitters / running status of equipment of pressure lube oil system shall be connected to UCP for controlling/display/indication/diagnostics and also the entire information (except control) shall also be replicated at the Station PLC end (by others) through Modbus communication (RS-485) link between UCP – PLC & station PLC.

All field instruments & junction boxes shall be weather proof to IP65 min. All intrinsically safe instruments shall be provided with barriers/ isolators in UCP

All instrumentation items used in hazardous areas shall be certified as indicated above by international agencies like UL,FM,or BASEEFA and shall be approved by PESO in case they are imported and shall be approved by CMRI, PESO and BIS if they are Indigenous. As a minimum all the field instruments shall be suitable for the use in Zone 2 Gr. IIA/IIB, T3.

The mentioned instrumentation is minimum required. Vendor shall be responsible for the safe & reliable operation of the system and shall include any additional instrumentation requirements for safe & reliable operation.

A flat surface at least 25 mm in diameter shall be supplied for the location of magnetic based vibration equipment.

## 2.9 Lubrication

Where the bearing housing acts as an oil chamber, an oil level sight glass with the recommended level clearly marked shall be fitted. Topping up of the bearing housing oil chamber shall be possible without dismantling the pump set assembly or any of its auxiliaries.

The Vendor's recommendations for lubrication will be submitted in the form of Lubrication Schedule.

## 2.10 Balancing and Torsional Vibration

The torsional vibration analysis of each different type of pump set (complete operational unit) shall be performed. Under all circumstances the Vendor shall remain responsible for the torsional stability of the pump sets at all operating conditions.

The Vendor shall advise predicted vibration levels at specified test points as covered in Section 6.5 "Performance Test". These predicted vibration levels shall be checked during the pump performance tests and subsequently during commissioning. Test results shall be accompanied by a description of the vibration analysis equipment and sensors plus a sketch depicting locations where the vibration readings were taken.

## 2.11 Electric Motors and Variable Frequency Drives

Motors shall be matched with the variable frequency drive and Vendor shall have total responsibility for compatibility between the two.

Rating of the electric motors shall be sized considering margin required as per API 610 on the maximum pump duty point. The motor rating shall also be crosschecked to satisfy the maximum (usually end-of-curve) power requirement of pump with reasonable margin so that the motor is capable enough to cater to any un-intended run-out case. All the motors shall be flameproof Ex(d) type, suitable for Zone 2, Gas group IIA/ IIB, and temp. Class.T3. Type test certificates for explosion protection class from the recognised testing authority shall be submitted. As per the statutory requirement in India the approval from the Petroleum and safety

organisation (PESO) for flameproof motors, Ex(d) must be submitted by manufacturer. This test certificate for flameproof motor, Ex(d) must be tested for having tested the motor along with Variable Frequency Drive for all the offered type of the equipment as per the requirement of IEC.BIS license must have been possessed by the manufacturer for indigenously manufactured FLP motors; PESO Certificates for the Flameproof motors shall be submitted along with the final MDR / OMM.

All motors shall be flameproof and shall comply to Specification for Induction Motor 14495-00-EL-SPC-0009, enclosed elsewhere in the MR, and equivalent applicable international standard. PESO approval for these motors shall be provided by vendor.

As a minimum, motors shall be with sleeve bearings with splash oil lubrication. However, Vendor / Motor vendor shall specify the type of lubrication in the bid.

All motors shall be supplied with flameproof nickel-plated double-compression cable glands and cable lugs. The terminal box shall be adequately sized to terminate copper / aluminium conductor cable of specified size and cable glanding on the terminal box. All indigenous flameproof equipment shall have valid BIS license and marking as required by statutory authorities. All flameproof equipment (indigenous and imported) shall be approved by PESO. Motor vibrations at bearing housing shall be within the limits of relevant international standards, unless otherwise specified for the driven equipment. Limits of shaft vibrations for motors with sleeve bearings shall be as per IEC-60034-14.

Two & four pole motors having sleeve bearings with forced oil lubrication shall be provided with proximity probes to measure the shaft vibration adjacent and relative to the bearings.

Vibration monitoring shall be provided for motors even with antifriction bearings, if the same is provided for the driven pump.

Where sleeve bearing motors are offered, a limited end float type of coupling shall be applied to prevent damage to the motor due to axial movement of the rotor during start-up or shutdown.

Vertical and horizontal adjustment alignment screws shall be provided for all drivers having a mass of over 250 kg.

The VFD design shall be suitable to meet the harmonic control requirement of IEEE 519 along with the harmonic distortion limit imposed by the electric utility.

Each VFD system shall have the following features.

• High input line-side power factor throughout the speed range

• Low load side harmonics with near sinusoidal current in the drive circuit

• Soft ‘start’ and soft ‘stop’ facility with the capability for bi-directional operation of the drive as may be required

• Reduced shoot through faults

• High starting torque, as may be required, for the drive application

• Low torque pulsations throughout the lowest and highest frequency range

• Stability throughout the lowest and highest load range

• Once the direction of motor rotation is set then motor should not be run in opposite direction in any circumstance due to change in phase sequence or any other reason.Refer specification and datasheets of motors & VFD's for more details. VFDs shall be interfaced with UCP over hardwired and Modbus Protocol on RS 485 connectivity. All motor winding RTDs and bearing RTDs shall be connected to UCP through VMS.

**Applicable Voltages**

HV Motor: 6.6kV ±10%, 50Hz ±5% above 160kW and ≤ 6MW

MV Motors: 415V ±10%, 50Hz ±5%, 3 Phase, 3 wire, upto & including 160 kW

Control Panel (UPS): 240V±1%, 50Hz ±1%, 1 Phase, 3 wire

Control Panel (NON UPS) - 240V+10%, 50Hz ±5%, 1 Phase, 3 wire

**Local Control Stations:**

The local control station shall be in FLP in LM-6 alloy housing and shall confirm to Indian or international standard.

It shall be suitable for hazardous area of Zone 2, Gas group IIA/IIB, and temp. Class T3. The enclosure class shall be IP65.

The Control station shall include start, stop push button, ammeter, indication for drive on and drive ready to start for main drive pump motors. For auxiliary motors LCS shall be provided with start, stop push button, Local/remote selector switch and ammeter. Ammeter shall be provided for motors rated above 5.5 kw. Any other device required for operational requirement of vendor's equipment.

Local ESD PB shall be provided near to the pump skid.

## 2.12 Machinery Protection System

The instrumentation shall be designed for hazardous area Zone 2, Gr. IIA/ IIB, and T3. The enclosure protection shall be minimum IP-65 min.

The MOC for instrumentation shall be suitable for the process and environment.

The instrumentation process and pneumatic / hydraulic tubing shall be SS316.

The shutdown signal for the package items shall be hard-wired to station PLC (if any).

All pumps shall be offered with an included primary protection system for safe operation of pump and driver. Control devices with suitable sensors are envisaged and the pump protection system should be integrated with the prime mover (driver) protection system so as to reduce hardware, cabling etc.

All instrumentation will be terminated at junction boxes for further cabling to the Unit Control Panel. Potential free contacts for extending alarm/ trip signals to the station PLC shall be made available for the protection devices. Transmitters shall be preferred over switches. Vendor to justify the use of switches if applicable.

One junction box shall be provided for control cabling, one for instrumentation cabling and one for power distribution. A separate junction box shall be provided for intrinsically safe equipment.

Junction boxes shall have 25% spare terminals and conduit entries. The Purchaser shall advise of field cable entry details after award of order.

Junction boxes shall be manufactured from LM-6 cast aluminum and mounted on the edge of the skid for ease of field wiring.

The description of each protective device of the pump is as outlined in subsequent Sections.

Apart from the protections outlined, the vendor may include other protections deemed necessary for operation of the package as a whole.

### 2.12.1 Vibration Switch

This switch with variable setting is required for sensing pump vibration and in case pump vibration exceeds pre-set level, it should give a signal for tripping of pumping unit. The Vendor shall advise whether voting logic, i.e. 2oo2, is necessary to avoid spurious trips.

Vibration sensors (Probes) to be placed for Motor Drive End, Motor Non Drive End, Pump Drive End and Pump Non Drive End. Key- phasor, Two (2) Number axial displacement probes with voting logic to be provided. If vibration sensors are eddy current (displacement probes), then two probes (in X & Y directions) shall be provided near each bearing.

### 2.12.2 Temperature Sensors (RTD Type)

These sensors shall be installed per bearing, to continuously monitor and provide alarm on rise of pump bearing temperatures (both DE & NDE). All sensors shall be of transmitter type with local indication. The Vendor shall advise whether voting logic, i.e. 2oo2, is necessary to avoid spurious trips. Wherever RTDs have to be directly interfaced with process PLC (Station PLC), R/I Converter - MIL 5074 - RTD or equivalent (resistance to current Converter) shall be used. The same shall be mounted in the RTD -JB near to pump set.

RTDs shall be provided at the following places:

Pump casing, Motor Drive end (MDE) bearing, Motor non Drive end (MNDE) bearing, Pump drive end (PDE) bearing, Pump Non Drive end bearing. RTD's for the winding to be provided as mentioned elsewhere in motor specification. All temperature detectors shall be interfaced in Vibration Monitoring System installed in UCP.

### 2.12.3 Seal Failure & Seal Leakage Detector

This sensor is required to detect pump seal leakage. This shall be arranged by sensing the level of leaked buffer liquid in a vessel using a level transmitter. It should initiate a signal for shutdown of pumping unit upon level in vessel going high. Pressure transmitter shall be provided for pressurised seal pots. Seal failure detection shall be provided for pump drive end & Pump non drive end side of mechanical seals.

### 2.12.4 Pump Suction and Discharge Pressures

Purchaser shall provide a pressure transmitter with local indication on the suction and discharge sides of the pump to continuously monitor and provide alarms on low suction and high discharge pressures.

### 2.12.5 General

Drive protections are listed in the specification 14495-00-EL-SPC-0010, Specification for Variable Frequency Drive. Vendor to furnish datasheets for total instrumentation employed. Any additional protection devices if recommended by the Vendor will be considered.

Set points for pressure, temperature, vibration and seal leakage level parameters for the pump and motor towards alarm and trip conditions shall have to be specified by the Vendor/Manufacturer.

Pump and drive protection signals shall be interfaced with the Plant Control System.

## 2.13 Field Instruments Requirements

All transmitters for pressure, differential pressure, temperature & Level shall be Smart type with HART Protocol with 4~20 ma output. Pressure & Differential pressure transmitters shall Capacitance type with internal Diaphragm supplied with 2 Valve and 5 Valve manifold. Accuracy of ±0.075% of upper range value. Temperature transmitters shall have an accuracy of ±0.18% of upper range value.

All electronic transmitters shall be intrinsic safe, PESO certified to Eex'ia', Zone-2 IIA/IIB T3 and Weather proof to IP-65 as Minimum.

All field mounted instruments shall be supplied along with the surge arrestors at instrument as well as at UCP end also.

Testing of indicators, transmitters, converters, valve positioners and controllers shall include:

i) Simulation of the process variable or input signal and measurement of the electronic, pneumatic or mechanical output.

ii) Calibration at 0 or 5, 25, 50, 75 and 100 precent of range to achieve the specified accuracy.

iii) Repetition of the above, for a rising and falling signal and checking of hysteresis

iv) Water bath test for temperature gauges or dry temperature test.

### 2.13.1 Process Switches

Transmitters shall be preferred over switches. Vendor to justify the need of switches. If switches are provided then following shall be applicable:

Testing of process switches shall include:

i) Simulation of the process variable and measurement of contact continuity

ii) Calibration of the switchpoint and checking of the deadband for rising and falling signals.

### 2.13.2 Alarms and Trips

i) Alarms and trips shall be tested by simulating the alarm or trip conditions at the switching device and observing that the relevant receiving devices respond appropriately

ii) Alarms and trips originating in electronic and electric circuitry shall be tested for correct operation at the same time that the electronic circuitry is tested

iii) If no other information is available, then alarm and trip settings shall be made at 20% (for low) and 80% (for high) of the specified range

iv) Vibration switches, proximity switches and similar devices may not be supplied pre-calibrated and where this is so, settings required for operation shall be made in accordance with the manufacturer's information.

v) Tube fittings shall be 316 stainless steel Swagelok or equivalent.

vi) Cases for locally mounted instruments and devices shall be weatherproof to IP-65 as a minimum. Case of instruments shall also meet applicable code requirements. Unused openings shall be plugged with duel certified nickel plated brass plugs.

vii) All threaded connections of the instruments shall be tapered, NPT.

viii) Transmitters shall be mounted as close as feasible to the process tap connection to minimize the length of any required process tubing but shall be at the grade level to facilitate maintenance.

ix) All transmitters, recorders, indicators and transducers shall be adjustable for zero and span values.

x) All field transmitters shall have integral local indication. Readout shall be LCD based. Analogue meter movements shall not be acceptable. Readout shall be configurable to provide actual scaled process variable in engineering units, 0-100% and 4-20 mA values.

xi) Analogue signals shall be 2-wire (loop powered) configuration.

xii) General purpose transmitters, recorders, indicators, controllers, and transducers shall have an accuracy of $\pm$ 0.075 percent of span, or better.

xiii) All transmitters shall be certified intrinsically safe. Intrinsic safety shall be utilised whenever possible. Galvanic isolation type safety barriers with active power supplies shall be applied in accordance with applicable codes and shall be of fused type with status indicating LEDs and these shall be supplied by the UCP vendor and shall be located in the control/ equipment room.

xiv) Field instruments and devices that are not available in an intrinsically safe format shall be certified appropriately for the hazardous area classification of the area where the instrument will be installed.

xv) All field instruments shall have a 316 stainless steel location label comprising of the tag number and service to identify the service position and location when it is removed for maintenance. Letters shall be black on white, deep engraved and shall be of 115 mm x 30 mm in size. Characters shall be at least 6 mm in height.

### 2.13.3 Level Measurement

i) The primary level measuring elements shall be Guided wave RADAR.

ii) Level gauges shall be magnetic follower type, pressure rated for the duty and of side / side connection.

### 2.13.4 Pressure Measurement

i) Primary pressure measuring elements shall be transmitters and of suitable range for the application.

ii) Pressure gauges shall be of the bourdon tube safety pattern type, 150 mm diameter, fitted with blow-out disc/safety glass and gauge adapter, direct mounted, bottom entry and ranged to display the normal operating pressures in the middle third of the scale.

iii) Pressure sensors shall be over-range protected to 130% minimum. Panel mounted direct reading or receiver gauge shall be 100 mm diameter.

### 2.13.5 Temperature Measurement

i) All temperature elements shall be provided complete with thermowells fabricated from solid bar stock. Exceptions to this requirement shall be skin type elements used for bearing or winding temperature measurements.

ii) Temperature elements shall be duplex element RTDs (for indication and control). RTDs shall be of the 3 wire type PT100. The associated smart transmitters (4-20mA HART DC output signal) shall be mounted at an easily accessible height. For temperatures above 350ºC thermocouples shall be used

iii) The Transmitters shall be of an intrinsically safe design and PESO certified, as a minimum, Hazardous Area Zone 2, IIA/IIB, T3.

iv) The transmitter body vent/drain connections shall be fitted with plugs. The transmitter shall be capable of withstanding over range pressure on either side of the capsule a least equal to the body rating without damage or calibration shift.

v) Transmitters shall be smart microprocessor based with non-volatile memory. A Self diagnostic facility shall be available.

vi) Transmitters shall be rated to 100 kg/cm$^2$g or 150% of the maximum operating pressure whichever is greater.

vii) Normal pressure shall be read at no greater than 75% of the calibrated range for transmitter reading steady pressure. For fluctuating service the normal pressure shall be read at 60% of the range.

### 2.13.6 Pressure Gauges

i) Pressure gauges shall be 150mm in diameter for general applications.

ii) Differential Pressure Gauges shall be 150mm in diameter.

iii) White laminated dials with black numerals shall be standard.

iv) The dial shall be marked as follows :-

- Manufacturers full name
- Manufacturers model number
- Element material specification and grade
- Other key details, for example NACE MR 01-75

v) Casing material shall be 316 Stainless Steel.

vi) For general use gauges shall use a bourdon tube measuring element. The accuracy shall be ±1.0 % FSD or better. The movement shall be either rotary geared stainless steel or cam and roller type.

vii) The element material for process gauges shall be 316 stainless steel as a minimum.

viii) All gauges shall be full safety pattern fitted with shatterproof safety glass. Gauges below 25 Kg/cm$^2$ range shall have a safety blow-out disc in the back. Gauges for higher than 25 Kg/cm$^2$ service shall have a solid front and blow-out rear.

ix) Gauges exposed to vibration or process pulsations shall be glycerine filled and shall be fitted with pulsation dampers to the same material as the element.

x) Gauges shall be able to withstand, without zero or calibration shift, over-range pressure of 1.3 x calibrated range as standard.

xi) Over-range protection such as gauge snubbers or savers shall be provided where the process pressures may exceed 1.3 x FSD.

xii) Gauge connection shall be at the bottom (Panel mounted gauges shall have rear process connections). Standard connections shall be 1/2″ NPT male for process gauges.

xiii) Gauges will be supplied with engraved labels stating tag no.

xiv) Gauges for pump service shall have pulsation dampeners where required and gauge savers in all applications.

### 2.13.7 Gauge Range Requirements

i) Pressure gauges shall be ranged so that the normal operating pressure is read in the middle third of the span.

ii) Ranges shall be selected from the standard list in IEC 381.

### 2.13.8 Temperature Gauges

i) Local temperature indicators shall be every angle rotatable, weatherproof, dial type bimetal thermometers with 150 mm dials and 6 mm diameter rigid stems.

ii) The unit of measurement for temperature shall be degrees centigrade.

iii) Dial plate shall be white with markings in black for positive readings, red for negative readings.

iv) Casing material shall be minimum 316 Stainless Steel.

v) The accuracy shall be better than ±1% of FSD.

vi) All gauges shall be full safety pattern fitted with shatterproof safety glass.

### 2.13.9 Thermowells

i) Thermowells shall be installed for all temperature sensing elements to permit their removal during operation unless special requirements prevent the use of a thermowell.

ii) All wells shall be machined from 316 stainless steel bar stock.

iii) Thermowells shall have 6 mm inside diameter reservoirs with NPT female instrument thread. Wells in process service shall be ANSI flanged.

iv) Separable sockets for filled thermal system bulbs shall be purchased from the instrument manufacturer.

v) Wells for insulated vessels and lines shall have extension necks and penetrate a minimum of 150 mm inside vessel.

vi) The thermowell immersion length shall place measuring element near the centre of pipe.

vii) Thermowells shall be capable to withstand hydrostatic testing conditions and dynamic forces of fluid flow.

viii) Screwed type thermowells shall not be used.

ix) The surface of the thermowell shall be free from burrs and notches.

x) Thermowell shall be accessed for resonance effects. Where thermowell are to be installed in lines subjected to high fluid velocities combined stress and frequency calculations shall be carried out to a proven method. The vortex frequency where calculated shall be to ASME Performance test code 19.3 latest edition.

### 2.13.10 RTDS

i) Resistance Temperature Detectors (RTDs) used shall be PT 100 with resistance of 100 Ω at $0^{o}$C, 3-wire type. Duplex type RTDs shall be used.

ii) RTDs shall be used with separate temperature transmitters.

iii) RTDs used for flow custody transfer or flow loops shall be Class A DIN 43760 or IEC-60751 or equivalent.

iv) Sheath material shall be AISI 316 SST with mineral-insulated cable construction.

v) The element head shall have two cable entries, one of which will be fitted with a certified plug.

### 2.13.11 Liquid Level Gauges

i) Level gauges shall be metal tube magnetic follower types as standard. The gauge shall provide visible coverage of complete level transmitter / controller range and the alarm / trip level switches. In the case of differential pressure level transmitters where large spans are involved a gauge located at the top, centre, and bottom of the installation shall be acceptable. The maximum span of magnetic follower gauge shall be limited by the manufacturer's recommendations.

ii) The level gauge chamber material shall be 316 stainless steel as a minimum.

iii) Centre to centre dimensions, ranges and visible lengths shall be to manufacturer's standard.

iv) Level gauges shall have top and bottom isolation valves. Vent and Drain valves shall be fitted.

v) Valves supplied, as part of the level gauge shall be of safety ball check design.

vi) Where magnetic follower type gauges cannot be used, transparent or reflex gauges shall be specified. Reflex gauges shall be used for clean service and have forged steel columns and toughened Borosilicate glass.

vii) Transparent gauges shall be used for caustic acid or dirty service; they shall be back-lit with an illuminator certified for the area hazard classification.

viii) Glass tube gauges shall not be used.

In case of the conflict vendor to refer Specification for Field Instruments. (14495-00-IC-SPC-0005) (Later).

## 2.14 Mainline Pumps Controls

### 2.14.1 Unit Control Panel

Unit Control Panel (UCP) shall be provided for Main line Pumps. One combined UCP with redundant processor one each connected to individual pumps shall be provided. Hence, there will be 1 combine UCP with redundant processors (as per below Table) and 1 no. of power distribution board (PDB).

| Sl. No. | Pump Station Location | No of Pumps | UCP type |
|---|---|---|---|
| 1 | Vizag | 1 | 1 Redundant Processor |
| 2 | Rajahmundry | 1 | 1 Redundant Processor |
| 3 | Vijaywada | 1 | 1 Redundant Processor |
| 4 | Suryapet | 2 | 2 Redundant Processor |
| 5 | IPS 1 | 3 | 3 Redundant Processor |
| 6 | IPS 2 | 3 | 3 Redundant Processor |
| 7 | IPS 3 | 2 | 2 Redundant Processor |

UCP shall be of PLC based with hot stand-by processors, redundant power supply and single I/Os. Pump wise I/O card & controller level segregation shall be done.

A separate HMI (Panel View) shall be installed at UCP and shall be used for displaying the entire diagnostics/parameters of forced feed lubrication system, alarm summary/alarm & event log and shall also act as a speed indicating controller to operate from UCP.HMI shall communicate with UCP-PLC processor.

UCP shall include all functions for monitoring and control of the pumps such as:

- Interlocks for suction pressure, lube oil pressure / level, seal levels/pressure, any yard valve position (discussed and agreed), pre-set start-up speed etc.
- Starting with pre-set low starting speed
- Tripping for low lube oil level / pressure, bearing temperature, seal pressure / level, vibration, low suction pressure, high speed.
- Flow and pressure control with control of pump speed

- Common trip signal for plant PLC or F&G system
- Any other requirement as recommended by Vendor for safe and satisfactory (for specified duty and operational requirements) performance of the pump.
- Indication for Alarm and trip and operation / stop shall be provided on the panel UCP HMI.

The panel shall be self-sufficient and stand alone for operation of each pumping system. Specified Bently (or equivalent) series for the vibration and temperature monitoring system can be housed within the UCP. The UCP shall be located in the control room in a safe area and shall meet IP 54 minimum type weather proofing requirement. Vendor shall provide complete information of the Control System with the bid for Purchaser review.

Each individual skid shall be provided with a start / stop panel with Remote / Manual switch, by vendor. Manual mode shall not allow any operation from the UCP. Inputs with regards to control between UCP-PLC & Station PLC shall be through hardwired cabling. Communication interface between station PLC & UCP PLC should also be possible via TCP/IP or MODBUS protocol.

This exchange shall be hardwired & through TCP/IP or MODBUS as well.

At existing stations where new UCP-PLC panels are envisaged for additional new pumps, UCP vendor to check the feasibility of providing combined cabinet (System + Marshalling) based on I/O count.

UCP-PLC shall exchange all the inputs / outputs for remote startup of pumps from Process -PLC.

VFDs shall be interfaced with UCP over hardwired and Modbus Protocol on RS 485 connectivity. All motor winding RTDs and bearing RTDs shall be connected to UCP through VMS.

## 2.15 Monitoring System

### 2.15.1 Overview

The monitoring system shall be based on the Bently 3500 Series or equivalent system.

Primary protection devices shall be included within the condition monitoring system wherever possible, avoiding any duplication.

The pump/prime mover package shall be equipped with a condition monitoring system designed to assist the Purchaser in assessing and improving the operation of the machinery assets.

These condition monitoring requirements shall not compromise or interfere with the operation of the primary machine protection systems.

### 2.15.2 Specific Technical Requirements

The system shall be designed to ensure the reliability and integrity of the data. The failure of part of the system shall not jeopardize the function of any other components in the system.

All field sensor inputs shall be continuously monitored and connected to dedicated input processing hardware.

Continuous, local display of each incoming signal shall be available.

The monitoring equipment shall comply with all aspects of API 670. Any field sensor inputs from hazardous areas shall be via IS barriers/ Isolators such as MTL 4000 series or equivalent.

In order to optimize the system performance during heavily loaded periods, e.g. machine starts, it is preferred that the majority of data processing should be performed by local processors and data then made available to the Plant Control System .

All data shall be available to the Plant Control System or SCADA system via the communication interface like TCP/IP / MODBUS etc.

### 2.15.3 Machine Monitor Requirements

The radial vibration, axial position, key phasor, accelerometer or velocity and temperature monitors should comply with the following:

- Monitor to be available to accept regulated mains or DC voltage as standard from the rack power supply;
- Monitor will respond to power up inhibit signal;
- Monitor will respond to a trip multiplier signal where appropriate;
- Monitors will be configurable via the front panel of UCP or MMS or remotely via the communication interface;
- Provide 2 fully adjustable set points for 0-100% of full scale;
- 4-20mA recorder outputs (preferred);
- Provide an alarm, danger and system OK relay for all channels;
- Visual display indicating system OK;
- Visual display indicating signal alarm;
- Visual display indicating an alarm, trip or unhealthy signal;
- Redundant power supply units;
- Redundant communication bus to system monitor for information transfer to Plant Control System or SCADA via serial links;
- Display of the variables being measured. In case of radial vibration and axial position monitors displays should indicate probe gap volts and vibration amplitude for each channel;
- System diagnostics shall include power, monitor, program, probes etc;

- Power up inhibit to minimise false alarms due to transient power surge;
- Trip multiply function to elevate set points by a factor of two or three to allow for initial high vibration during start ups;
- Remote reset capability;
- System health, transducer “OK” relay output;
- RS-422 or RS-485 serial communication links or TCP/IP to the Plant Control System and SCADA system;
- Volt free contacts outputs for both vibration and temperature inputs. ;
- Intermittent, fleeting or short duration transient spikes should not generate false alarms; and
- Phase monitoring must be achievable. These signals should also be made available for triggering purposes in the MMS.

The system shall be capable of expansion to incorporate other monitoring features necessary for future pump set.

Vibration/temperature monitoring (VTM) rack to be installed inside the UCP and display unit shall be mounted on the front side of UCP. Vibration modules shall have BNC connectors for tapping raw vibration data.

VTM and UCP – PLC shall be interfaced with process (station) PLC. All the data regarding monitoring/diagnostics shall be shared over this RS-485 modbus or TCP/IP communication link. All the similar kind of instruments shall be daisy looped.

Vendor shall supply a separate work station (with CPU of latest configuration, 21"-TFT monitor with all the peripherals) in 800X800X2100 cabinet with glass front door other than UCP & PDB panels & shall be loaded with software (both works & run time) of UCP PLC. Also, laptop loaded with Bentley’s configuration and diagnostic software shall be provided. VTMs to be interfaced with laptop and UCP-PLC processors shall be interface with work station.

### 2.15.4 Temperature Monitors

Temperature monitor interface modules shall accept RTD or thermocouple inputs (RTD to be used if temp less than 350ºC). Bearing temperature monitors shall be used for incoming bearing temperature sensors to allow accurate correlation with vibration signals. Other temperature inputs will be acquired from the SCADA system.

## 2.16 Pump Skid Instrument Installation

The installation and wiring of skid-mounted equipment shall be in accordance with the applicable Standards, Codes and Statutory Regulations.

Pump skid instrument equipment and cabling layout drawings, together with junction box termination drawings, shall be submitted for approval by the Purchaser.

## 2.17 Civil

Vendor shall furnish all the relevant information for carrying out foundation designs. As a minimum following values shall be provided.

- Skid dimensions including General arrangement.
- Loads / Forces acting on top of foundation
- Anchor bolts or foundation bolt details
- Shimming Plate details

# 3 PROTECTIVE COATING

The equipment base plate and skid structure and support shall be painted as per the project Specification for External Painting and Protective Coating (will be attached later) 14495-00-PE-SPC-0005. Pump and the Motors shall be painted as per manufacturer standard. Manufacturer painting standard shall be furnished with the Bid for review during bid evaluation.

# 4 SPARE PARTS AND SPECIAL TOOLS

## 4.1 Spare Parts

### 4.1.1 Spare Parts Required

I. **Mandatory Spares:** The list for Mandatory spares Appendix 10 for the pump packages are attached in MR. Cost of Mandatory spares shall be included to arrive at the total cost of package for a particular item.

II. **Spares for two years Normal operation:** Vendor shall furnish an itemised list of recommended spares with unit prices for two years normal & continuous operation of the complete pumping unit (including Mechanical, Electrical, and Instrumentation spares) required. These spares shall be over and above the specified mandatory spares.

III. **Erection & Commissioning spares**: Vendor shall include in his scope of supply for each pump package, the spares required for erection & commissioning of the pump, motor, VFD's & Instruments etc .of that package. List for the same separately for each pump to be furnished by the vendor along with the bid.

If however, any additional spare is consumed during erection & commissioning over and above the included erection & commissioning spares, the same shall be provided by the vendor at no extra cost to purchaser at the time of erection & commissioning.

### 4.1.2 Information Required

The parts list shall specify the source of manufacture and model number of each component part.

### 4.1.3 Contents

The spare parts list shall also identify the quantity of spare parts held, or the nearest major service centre, relative to the equipment being offered to the Purchaser.

Should the Purchaser exercise its option to purchase any or all of the spare parts, it shall be the responsibility of the Vendor to provide the following at no extra cost to facilitate identification and classification of spare parts:

- Every item shall have a tag or legend bearing the drawing and part number reference;
- The shipping advice note shall cross reference to the tag number; and
- A list giving the following information for each spare part:
  - Handbook number;
  - Handbook drawing number;
  - Handbook drawing part number;

- Spare parts list and item number description;
- Manufacturing drawing number;
- Manufacturing drawing part number; and
- The Purchaser's specification number and/or purchase order number under which parts were supplied.

Where the same pump part number is used for a component in differing pumps additional identifiers must be used.

Spare parts shall be traceable to a pump by size, type and, if unique, pump equipment number.

## 4.2 Special Tools

The Vendor shall supply one (1) set of special tools & tackles required for the erection and/or maintenance of the package including all ancillary equipment.

Special Tools & Tackles means all such tools / tackles those are specific to the erection and/or maintenance of the supplied equipment/package, and are normally not expected to be available in a plant workshop, but without which it would be difficult or time-consuming to do erection and/or maintenance of the supplied equipment/package.

The Vendor shall identify the special tools required with Bid. Special tools shall be itemised and submitted for review.

## 5 MARKING

Pumps shall have a nameplate made out of 1 mm thick grade 316 stainless steel plate firmly attached to the pump pedestal by means of stainless steel screws or rivets. The information stamped on the nameplate shall be as indicated in Clause 6.13.1 of API 610.Lettering shall be 5 mm high with 3 mm spacing between lines. Pumps shall have a direction of rotation arrow cast into pump casings or indicated on a stainless steel plate mounted on the bearing housing or pump pedestal close to the drive end.

Prominent warning signs shall be affixed to the pump for removal of anti-brinelling devices and lubrication requirements.

# 6 TESTING

## 6.1 General

As a minimum, inspection, testing and QA shall be conducted according to this specification and the attached data sheets.

The Vendor shall operate a quality management system to ensure the technical requirements of this project are met. The QA requirements specified herein shall apply to all materials and equipment in the vendor's scope of supply. Shop inspection by the purchaser's nominated inspector will be required and the extent of inspection shall be approved by the Purchaser.

Test requirements will be as specified here in and as noted on the pump data sheet. Vendor's standard QA/QC procedures are acceptable except if modified herein.

Materials mill test certification (chemical and mechanical data) as noted on the data sheet, for pressure containing parts, impeller and shaft are required.

The Vendor shall supply calculations to show the conversion of data acquired with tests carried out using water to that applicable for the fluids proposed for operation of the pumps.

The Vendor shall include a description of shop pump test set-ups including instrumentation to be used and specific step by step test program.

## 6.2 Welds

Testing of welds on the pump sets and associated equipment shall be in accordance with Table-15 of API 610.

Auxiliary connection welds shall be inspected using magnetic particle testing and casing welds shall be subject to radiographic inspection.

## 6.3 Castings

Castings will be subject to visual examination to ensure conformity to MSS SP-55.

All major weld repairs to pressure containing castings shall be subject to approval by the Purchaser. Weld procedures and weld maps shall be furnished that show the dimension and locations of these defects. Material inspection shall be in accordance with Table-15 of API 610.

Major defects are:

- Repairs to leaks that develop during hydrostatic tests;
- Repairs where the depth exceeds 20% of the wall thickness or 25 mm, whichever is less; and
- Repairs where one defect surface area exceed 65 $cm^2$.

Weld repairs shall be inspected by dye penetrant/magnetic particle examination. Castings shall be re-hydrotested after repairs have been carried out.

Casting shall have 100% traceability .

## 6.4 Hydrostatic Tests

Hydrostatic testing shall be carried out in accordance with API 610.Gaskets used during hydrostatic test shall be identical to those supplied with the pump for operational service. Leaks past any gasketed areas or any joint connections are unacceptable.

## 6.5 Performance Test

The pumps shall performance tested as per Section 8.3.3 of API 610.

The pumps shall be tested at the following duty points:

- Shutoff (no vibration data required),;
- Minimum continuous stable flow (beginning of allowable operating region
- Between 95 % and 99 % of rated flow,;
- Between rated flow and 105 % of rated flow,Best efficiency point (BEP);
- Approximately the best efficiency flow (if rated flow is not within 5 % of best efficiency flowrate),
- End of allowable operating region.
- Additional points may be required if more than 30% of the curve is having no measured point.

The pump speed for the above tests shall be the same as that required to meet the duty point specified. The guaranteed test point will be specified in the tender.

The following parameters shall be measured during the tests at all test points:

- Pump hydraulic power;
- Flow rate;
- Pump head;
- All bearing vibration amplitudes;
- Radial bearing temperatures;
- Thrust bearing temperature when tilt pad thrust bearings are provided. (Temperature of one pad on each side (active and inactive) of the bearing shall be recorded);
- Inlet and drain temperature for pressure lube oil systems at 15 minute intervals. The lube oil inlet temperature shall be varied during the tests from the minimum to the maximum allowable operating lube oil temperature specified by the oil manufacturer. The temperature range shall not be less than that allowed in the Vendors operating manual for the particular pump.

  When pumps are fitted with hydrodynamic thrust bearings, axial loads shall be measured during the performance test at the above mentioned test points, and shall be at maximum and minimum continuous speed.

When supplied with the pump, the spare rotor and inner casing assemblies shall be performance tested in the corresponding pressure casing.

NPSH3 test if required as per the conditions specified in this specification or if specified in the data sheet shall be conducted. NPSH3 test shall be of the vacuum suppression type. A throttle valve NPSH3 test may be accepted subject to Purchasers approval.

NPSH3 tests shall be carried out on all pumps in accordance with Section 8.3.4.3 of API 610.

## 6.6 Complete Unit Test

One pump set per manufacturer, shall be subject to a complete unit test as per Section 8.3.4.4 of API 610 but with the flow rates and pump speeds corresponding to the performance tests defined in Section 6.5 of this specification. HPCL will advise at appropriate time during the course of order execution, the specific pump set for which complete unit test shall be carried out.

Vendor to consider the above requirement suitably in the unit price quoted for the pump .

Complete unit test shall be conducted in the same manner as mechanical run test specified under section 6.7 below with job driver and all job auxiliaries (including VFD) shall be used during this test. Due to use of job driver, difference in specific gravity between the test liquid and actual pumped liquid may sometimes not permit running the pump at rated capacity during this test, in such cases, test shall be performed at the maximum permissible capacity.

## 6.7 Mechanical Run Test

After the performance test has been completed, the Vendor shall operate the pump in a stable condition for at least 4 hours at rated capacity and for 2 hours at minimum continuous flow, during which pump mechanical behaviour shall be demonstrated to meet the requirements of this specification. Counting of test duration shall start after stabilization of bearing temperature. The test shall be run at maximum continuous speed.

Where pressure lubricating systems are used, the lubricating oil temperature shall be held for at least 30 minutes at the value corresponding to the maximum allowable viscosity, and for 30 minutes at the value corresponding to the minimum allowable viscosity. At minimum and maximum viscosity, and at the viscosity corresponding to the normal operating oil temperature, shaft vibration shall be measured and vibration frequency analysed to check for instabilities.

Each pump shall be stripped down after completion of the test and shall undergo a thorough visual inspection. Special emphasis shall be placed on the following items:

- Pump casing and impeller wear rings; and
- Thrust and main shaft bearings.

If there is evidence of internal rubbing or sleeve bearing damage on disassembly following the unit test, the cause of the problem must be corrected and the pump shall be rerun, again dismantled and re-inspected.

This process will be continued until there is no measurable dimensional change or metal transfer in the bearings or close-clearance parts. Pumps need not be run again if no evidence of rubbing or other defects is found on disassembly. The cost of subsequent testing plus disassembly/reassembly (following detection of internal pump damage) shall be at the Vendor's cost.

## 6.8 Inspection and testing requirements (Instrumentation & PLC)

### 6.8.1 Scope

Vendor shall be responsible for the integration, inspection and testing of the control systems. Vendor shall assume final responsibility for the inspection and testing of the control systems to ensure that the system conform to the requirements of the codes and standards specified in this document.

Purchaser's may appoint a third party inspection services for the control systems. The Purchaser's representative shall have free access to vendor's facility and those of all major vendor / vendor's facility at all times.

Inspection by Purchaser or his Inspector will in no way relieve Vendor of any of his responsibilities for ensuring that the system supplied meets all the requirements of this document and its attachments.

Inspection and testing shall be carried out at the Vendor/ Vendor's work place and shall be witnessed by Purchaser's representative.

Based on this document, Vendor shall submit full testing procedure for factory testing, site testing and acceptance procedure for Purchaser's approval. For hardware, the procedures shall include purpose of test, test definition of input, procedure, result expected, and acceptance criteria. For software, it shall include details of the method, list of tests, sequence of execution, result expected, and acceptance criteria.

The testing and acceptance of the system shall be carried out on the mutually agreed procedures and criteria based on this specification and Vendor / Vendor's standard procedures.

Vendor shall identify in the project schedule hold points for Purchaser witnessed inspection/ test.

### 6.8.2 PLC Factory Acceptance Test (FAT)

The FAT shall be a thorough and complete functional test of the hardware and software of the entire control system. FAT procedures shall be submitted to Purchaser for review and approval.

Vendor shall conduct inspection after completion of all work, including equipment burn-in and pre-FAT test performed as appropriate. Pre-FAT test report shall be submitted to the PURCHASER prior to FAT. Vendor shall give Purchaser advance notice of at least fifteen (15) working days before the FAT is conducted.

Vendor shall demonstrate the functional integrity of the system hardware and software. No material or equipment shall be transported until all required tests are successfully completed and certified 'Ready for Delivery' by the Purchaser.

Purchaser reserves the right to be involved and satisfy himself at every stage of inspection. Purchaser shall be free to request any specific test on any equipment considered necessary by him although not listed in this specification.

Vendor shall note that acceptance of any equipment or the exemption of inspection or testing shall in no way absolve Vendor of the responsibility for delivering the equipment, which meets all the requirements specified in the specification.

The FAT shall be conducted at vendor's manufacturing facility. Vendor shall provide a room, complete with acceptable office facilities and refreshments for the Purchaser's representative(s) for the duration of the FAT.

All equipment (including the shutdown functions) shall be tested together as a system complete with all operating controls.

All tests shall be conducted utilizing only equipment that will eventually be shipped to the Purchaser. Use of "replacement" units during any part of the FAT will not be allowed.

Any defects found during the FAT shall be rectified in the presence of the Purchaser. In the event this is not possible, a checklist shall be prepared stating all outstanding items for approval by the Purchaser's Inspector.

It shall be Vendor's responsibility to modify and/or replace any hardware and modify the software if the specified functions are not satisfactorily achieved during testing and factory acceptance.

The equipment shall not be shipped until all discovered defects have been rectified and satisfactorily re-tested.

The following test shall be included into the FAT as a minimum:

- Power Supply tests
- Processor tests
- I/O tests
- Functional tests
- All communication interfaces
- Electrical noise immunity
- Radio Frequency Interference
- Dimensional checks
- Heat Soak test as specified Below :

  Heat Soak Test duration shall be 100 hours. Ambient temperature shall be simulated at 35°C.The temperature shall be increased to 50°C (15°C above ambient) for 12 hours cycle between ambient and 50°C.Full load shall be maintained as practically feasible throughout the test.

The factory inspection shall be carried out as follows:

- Vendor shall perform in-house testing prior to PURCHASER witnessed FAT to assure smooth testing

during the FAT.

- Vendor shall then systematically, fully, and functionally test all the hardware and software in the presence of Purchaser's representative/inspector. All systems shall be interconnected to simulate, as close as possible, the total integrated system. VENDOR shall use a simulator suitable for all types of I/O. Individual system I/O shall be able to be tested with the simulator, with related checks being made on interactions between other parts of the system.

Apart from visual and mechanical testing, functional testing shall include the simulation of each input and output to verify proper system response for both analogue and discrete signals. All hardwired inputs and outputs shall be wired to simulator panel prior to FAT. The testing as a minimum shall include:

- Check of all input/output points.
- Check of scans time values.
- Check of all control configurations as to input, output, modes, failure, action, etc.
- Check of loop configuration as to ranges, limits, alarm points, unit etc.
- Check of all computations.
- Check of all logic and sequence control.
- Check of correct changeover of the back-up units.
- Check of keyboard/touch screen functions, key-lock functions.
- Check of log reports and historical functions.
- Check of all displays.
- Check of HMI refresh rates, data base update and display call-up time.
- Check of module diagnostics.
- Check of remote diagnostics.
- Power failure
- Communication failure
- Electrical noise immunity
- RFI immunity
- Communication between SCADA/DCS/RTU and Subsystems

All hardware must be inspected for physically damaged components and general workmanship standards. Particular note should be made of:

- Wiring looms and terminations
- Quality of earth and power connections
- Ease of access for maintenance work.
- Door seals and paint finish with reference to the final site environmental conditions.
- Printed circuit board connections to backplanes in card cages
- Plug and socket connections.

- Robustness of supports, frames, and circuit boards

A number of tests must be carried out on the completed system. The following tests are a minimum requirement and shall be carried out on the total deliverable system hardware and software, including commissioning spares. The system shall be fully configured to provide all functions as detailed in the specification. Any external system interfaces must be adequately simulated by Vendor equipment.

**Shock Test and Vibration Test**

During this inspection, a simple shock vibration test shall be carried out on a number of plugs, sockets, terminal blocks, and printed circuit board backplane connections to ensure that a reliable and secure connection is provided.

The shock test shall be performed on an operational system by tapping the aforementioned components with an insulated device. Care shall be exercised so as not to damage the equipment. Any abnormal effect of the system shall be investigated and rectified be Vendor.

**Supply Power Variations**

This test shall be conducted to verify the ability of the system to compensate for input power variations without impairment of system performance.

The following power variations shall be applied on an operational system for a minimum of 20 minutes each. System functional performance shall be monitored for abnormalities at the system displays sand indicators:

- Maximum specified voltage and nominal frequency.
- Minimum specified voltage and nominal frequency.
- Maximum specified frequency and nominal voltage.
- Minimum specified frequency and nominal voltage.
- Input power interruption with nominal voltage and frequency before and after interruption

**Radio Interference Test**

The following test shall be carried out to demonstrate the immunity of the equipment to radio frequency interference. A portable radio, of frequency and power to be agreed, shall be operated a distance of one (1) metre from each equipment cabinet or console in turn.

All doors on the equipment cabinets or consoles shall be left fully open for the duration of this test. During the test, the system shall be operational and shall be monitored for abnormal indications or spurious data.

**Functional Test**

Functional testing is largely dependent on individual system requirements. The system shall be subjected to tests sufficient to determine its compliance with all functional requirements specified in this Specification. The following tests shall be performed, where applicable:

I. Operator Interfaces

- All specified operator commands, including data entry, cold and warm starts, changeovers; display and printout requests shall be exercised. The response to all commands shall be verified to be correct and within the specified response times.
- Particular attention should be paid to commands under restricted access by means of key locks or passwords. The specified security access level shall be verified for all commands.
- Where applicable, alarm annunciation facilities shall be exercised and operator's silence and acknowledge commands shall be tested. The response time to alarm conditions shall be verified against that specified in this Specification.
- All operator and system displays shall be demanded and examined for compliance with the Specification. Where displays are accessible be various routes, all such routes shall be tested and display cross references and indices shall be checked.

II. Maintenance and Calibration

Procedures specified by Vendor /Vendor in the maintenance manual(s) for maintenance and calibration of equipment shall be carried out to ensure that all specified adjustments and other maintenance work could be conducted in a safe and reliable manner.

III. Subsystem Compatibility

Hard drive

System employing removable disks or cassettes for long-term data storage and archiving shall be tested for compatibility as follows:

- Save data to a disk/cassette at one drive unit.
- Restore data from the disk/cassette to primary memory at every other disk/cassette drive in the system.

Repeat the above tasks by saving data at each disk/cassette device in turn.

Printed Circuit Boards

Where printed circuit boards are common to a number of sub-systems, repeat the following for each circuit board type:

Remove one circuit board from a sub-system selected at random by the Purchaser.

- Adjusts links or jumpers as necessary.

- Insert the circuit board in another sub-system selected at random by the Purchaser.
- Verify that the system continues to operate satisfactorily.

The above tests for sub-system compatibility are a minimum requirement. Similar tests should be carried out on other common sub-systems, where applicable.

**Electrical Test**

The following test shall be performed on all electrical and electronic modules and systems:

- Functional test of all electronic modules, test for short circuits, and test for ground faults.
- Verification that terminal and wiring coding is in accordance with the panel drawings.

**Subsystem Failures**

Tests shall be carried out in order to verify that redundant systems operate as specified, i.e. changeover to back-up occurs correctly and is annunciated to the operator. Operator displays and diagnostics identifying the particular failed sub-system shall be checked as sufficient. The following redundant sub-systems are typical.

I. Redundant Processors

Failures on each processor (including back-ups) in turn shall be simulated. Failures should be simulated:

- By interruption of the processor power supply for sufficient duration to cause a processor reset condition.
- By manual reset of the processor
- By inserting errors into PROM and RAM memory areas

II. Redundant Power Supplies

Failures on each power supply in turn, within a redundant system shall be simulated by isolating the supply. Functional performance of the system shall be verified as satisfactory with the minimum number of redundant power supplies in operation.

Where battery back-up supplies are employed, the primary supply shall be completely isolated and correct operation of the battery supply shall be verified. This test shall be carried out on both system battery supplies and memory retention batteries.

- Degraded Operations

  The capability of systems providing reduced operations following particular subsystem failures shall be tested. Degraded system operations shall be verified as meeting project requirements.

- System Diagnostics

All standard system diagnostics provided by Vendor shall be performed including both resident and non-resident diagnostic software.

Typical diagnostics include:

- Memory tests.
- Communications tests
- Disk/cassette tests
- Printout tests
- Display character tests

Where practicable, faults shall be simulated to verify correct diagnosis and monitoring by system diagnostic routines.

**Input/output Simulation Test**

All inputs and outputs shall be simulated by Vendor's equipment. Correct indication of these inputs and outputs shall be verified together with all relevant configuration and logical or numerical calculation details within the database.

The test facilities shall allow full load tests to be carried out, i.e. all inputs and all outputs simultaneously in their active states.

Any item of equipment, including all software, hardware, and documentation, deemed to be unsatisfactory by the PURCHASER and any test failure on the system or sub-system shall be rectified by VENDOR, at his own expense, and shall be re-tested to the satisfaction of the PURCHASER.

### 6.8.3 Composite Instrument System Test (CIST)

Vendor's responsibility includes the full scope of the CIST of the UCP.

The locations of the CIST shall be at Vendor's works.

The Vendor shall carry out the CIST to check proper interfacing and interactions between the various systems, databases, and software. Vendor shall be responsible for the entire CIST scope. An outline of the scope of this assistance is provided below:

The CIST shall as a minimum include the following:

- Review of test procedures
- Relocation of the third party equipment to the CIST site (if required)
- Connection of foreign devices
- Energisation and system check out
- Assistance with authorized changes to configuration
- Maintaining system configuration backups

- De-energisation of the system

Vendor shall provide personnel, as required, to perform the CIST.

Vendor shall be responsible for any repair or maintenance work required on the Control Systems during the CIST in accordance with the warranty agreement.

Any problems encountered during CIST will be carefully recorded and corrected by the relevant individual equipment Vendor /Vendor to the satisfaction of the PURCHASER. However, it remains Vendor's responsibility to liaise with the individual equipment Vendor/Vendor to ensure the desired result is achieved.

### 6.8.4 PLC Site Acceptance Test (SAT)

SAT shall be performed at each location of the facility at site during hook-up and commissioning.

Vendor shall be responsible for and shall provide the technical work force necessary for the supervision of the tie-in connections of the power cables for the system equipment, serial link cables, and the system cables to the cabinets. However, Vendor shall be responsible for the supply of special tools and all wiring (i.e. supply, install and terminate) within the Control Systems equipment.

Vendor shall provide test kit to allow complete testing of system per module.

Vendor shall be responsible for the correct installation and hook-up of the complete equipment. Vendor shall then load the system and application software and shall demonstrate the system functionality to verify system conformance with the requirements to the satisfaction of Purchaser.

Purchaser shall reserve the right to instruct VENDOR to carry out a repeat of any or all of the tests performed during FAT.

### 6.8.5 Test Documentation

Vendor shall supply a full set of deliverable documentation before the start of FAT. As a minimum, the following shall be supplied:

- The Specification and relevant drawings
- Draft set of operator and maintenance manuals
- Test Plan and Test Specification for factory acceptance tests
- Summaries of all previous testing including Vendor/Vendor tests

The usefulness and purpose of documents shall be major consideration. For example, the operating manual must include clear and concise instructions for the typical plant operator, while technical manuals shall be detailed, complete, and accurate. Modifications carried out during the test period shall be detailed appropriately in the documentation

# 7 MATERIAL SOURCING TRACEABILITY AND CERTIFICATION

The Vendor shall submit a Manufacturers Data Report (MDR) which will allow identification and certification of all pressure retaining parts and key rotational parts of the pumps which shall include mechanical properties and chemical composition analysis, mill certificates, heat numbers and certificates of conformance. Each certificate shall be reviewed and signed by the manufacturer's authorised personnel as detailed in the Inspection and Test Plan.

- Pressure retaining parts shall be clearly marked to ensure that full traceability is maintained.
- Pressure-retaining parts shall include body forgings and castings.
- Key rotational parts include the impeller and impeller shaft.
- Certificates shall be available at final inspection in the manufacturer's works.
- Certificates of compliance shall be provided for bolting used in pressure retaining parts.

# 8 PACKING, SHIPPING AND HANDLING

Preparation for shipment shall be as per Section 8.4 of API 610.

The components of the pump set shall be shop assembled to the maximum extent practical, such that field assembly is both minimized and simplified, and matching of components is assured. The parts that cannot be shop assembled prior to shipment shall be shop fitted, identified and match marked. The equipment items that are shipped in a “knocked down” condition shall be individually tagged with the assigned tag/part number. Vendor’s philosophy for the same shall be reviewed and approved by Purchaser.

Adequate provisions shall be made to prevent damage to the bearings from brinelling during transport. Rotors on equipment shall be strapped down to wooden blocks for transport, and appropriate shaft locks shall be provided and fitted. Appropriate high visibility label tags shall be fitted to all blocked or locked rotor equipment.

All spare parts shall be packed separately from the main pump set assemblies.

All parts and equipment including spares shall be packed suitable for long term storage in a tropical climate.

The spare rotor shall be crated in a metal container for transportation and storage; the crating method shall be suitable for at least 4 years storage in both horizontal and vertically suspended position. The container shall be equipped for nitrogen blanketing.

# 9 INSPECTION, QUALITY ASSURANCE AND QUALITY CONTROL REQUIREMENTS

The Vendor shall conform to the requirements of this specification in the performance of the work under the Contract.

The Purchaser reserves the right to inspect the manufacture of the pumps at the Vendor or Sub-Vendor's premises at any time. The Purchaser may also appoint a third party inspector to act on his behalf.

The Vendor shall submit an Inspection and Test Plan (ITP) for approval prior to commencement of manufacture. The Purchaser will advise the Vendor, by marking up the Inspection and Test Plan, of the specific inspection review, witness and hold points required. The Vendor shall give ten working days prior notice to the Purchaser of such item or hold point being reached.

Vendor shall submit quality plans, test procedures for all tests, for approval of Purchaser, and testing shall be done only after such documents have been duly approved.

As a minimum the following stages will be subject to witness/hold/review by the Purchaser or third party inspector:

- Visual inspection of all parts prior to assembly of pump;
- Visual inspection of the assembled pump with accessories;
- Surface finish and profile verification at each phase of surface preparation and coating;
- Name plate checks;
- Material certification checks;
- Radiography of impeller tip and panoramic shot of impeller;
- Ultrasonic testing of shaft;
- Dynamic balancing of rotor assembly;
- Heat sample of each casing with test results;
- Sound level and vibration tests;
- Review of all documents prior to shipping;
- Full dimensional checks; and
- Pump tests.

The Vendor shall obtain Purchaser approval of the following prior to any fabrication taking place:

- Weld procedures; and
- All drawings associated with the pump sets.

The Vendor shall afford the Purchaser the use of telephone, facsimile and office facilities for the purpose of completing reports during inspections.

Where inspection or testing is performed by certified testing laboratories, they shall be registered by an internationally recognized testing organization.

The appropriate inspection equipment and the Vendor's personnel shall be readily available to complete the inspection at the time agreed.

The appropriate test procedure and acceptance criteria shall be available to the Purchaser for immediate analysis of the inspection results.

The final inspection, before issue of a release note for the pump sets, shall include material certificates, test certificates, surface treatment, dimensional conformity, tagging and packing conformity. Specimen crating and packaging may also be inspected.

## 10 SITE ACCEPTANCE TESTING AND COMMISSIONING

The Vendor shall provide supervisory assistance in site, erection, testing & commissioning of pump sets at each pump station. After the completion of the pre-commissioning activities (including mechanical, electrical, instrumentation) each pump package shall be subjected to 48 hours of site trial run / operation. During these 48 hours safe and satisfactory operation of pump package unit (including pump, driver, VFD, vendor supplied electrical equipment and all auxiliary equipment) shall be established. Operating point shall be agreed after award, however will be within pump operating range. 48 hours site trial run shall form the part of commissioning. The number of days required for supervision of erection, testing & commissioning, shall be specified by the vendor in the bid, along with daily rates and number of people required.

The Vendor shall be responsible for witnessing and signing off all activities associated with commissioning and that testing of pumps are carried out in accordance with Vendor requirements.

On completion of Site acceptance testing & commissioning, the Vendor shall submit a report to the Purchasers detailing all activities associated with pre-commissioning, commissioning and testing of pumps.

The Vendor shall specify equipment required to carry out on site testing of pumps (including providing specific locations for installation of the equipment) to prove the operational performance over the total range of duty point specified using the proposed hydrocarbon fluids. The Vendor shall include details of the testing equipment in the bid.

The information shall include the following as a minimum:

- Provision of nozzles; (if required for carrying out SAT)
- Provision of instruments (portable or fixed);
- Measuring accuracies; and
- Calculation sheets for site testing.

Delays which would result in bench sitting shall be paid based on daily rates which Vendor shall identify with valid reasons. Vendor shall provide list of activities and facilities that shall be provided by the Purchaser in the bid which if ensured shall not result in eligibility for claiming bench sitting.

In general Purchaser considers following shall be adequate to avoid bench sitting. Vendor shall review and confirm the adequacy and completeness in the bid.

A. Before arrival of the Vendor following shall be completed by Purchaser:

- All pumps lube oil skids and VFDs are installed on its supports pending alignment, levelling etc. as recommended by Vendor. Blind flanges, caps etc provided either for restoring weather proofing or protection from damage to the connections shall be retained.
- All interconnecting pipe spools will be placed within the pump shed vicinity for installation immediately after Vendor acceptance of the alignment and foundation fastening.

- All cabling interconnecting with the pump skid, lube oil skid and control panels will be installed pending hook-up with junction boxes or terminals.
- Plant utilities (material handling, power, earthing, vent and drain system) necessary for pump operation are commissioned.
- Vendor identified support personnel with required qualification and experience as specified by the Vendor in the bid are available.
- Vendor supplied special tools and start-up and commissioning spares are available.

B. Before commissioning (which will follow completion of installation to the satisfaction of Vendor) following shall be completed or is made available :

- Commissioning assistance team is available.
- Upstream and downstream systems are installed and ready for commissioning, with completion of identified pre-commissioning activities agreed with Vendor.
- Duty product supply is available within the specified operating range.
- Power is available

A gap will be necessary between A and B activities (days should be specified) and hence at least 2 visits shall be considered by the Vendor. At least a 15 days' notice for part A and a week's notice for part B would be required.

Statutory approval (like PESO, CPRI etc.) for combine testing of VFD and motor for all tags shall be considered by Pump vendor.

## 11 PERFORMANCE GUARANTEE

The Vendor shall guarantee that the pump sets supplied shall the meet the performance requirements set down in this specification (including referenced documents).

Special emphasis is placed on the following criteria:

- The ability to meet duty point at the normal flow range and rated flow rate;
- Power draw at normal and rated flow rates;
- NPSH requirements at normal and rated flow rates;
- Drive motor efficiencies at normal and rated flow rates;
- VFD converter efficiency across it's operating range;
- Harmonics for VFD
- Converter transformers efficiency; and
- Equipment noise level under all operating conditions.

The Vendor will guarantee the pump performance as witnessed in factory tests. The Vendor shall nominate the performance of the pump at the rated test point in terms of total dynamic head, and power at a nominated flow rate and pump speed. The hydraulic power at the test point shall be advised by the Vendor in the form of a positive and negative percentage tolerance. No negative tolerance on flow or total dynamic head at the rated speed will be accepted.

## 12 TRAINING

The Pump vendor shall arrange for a training of M/s HPCL's engineers at site. The training shall cover the design, operation and maintenance aspects of supplied pump- motor / VFD/UCP package by the representative of respective manufacturer and for a minimum of 5 working days for a group of 10 engineers.

## 13 VENDOR SUPPLIED DOCUMENTS

The Vendor shall supply documentation in accordance with the Vendor Document Requirements List (VDRL) indicated under Appendix 11 of this specification.

# Appendix 1 DATA SHEETS

## APPENDIX-1: DATA SHEETS

| Document No. | Document Title |
|---|---|
| 14495-15-ME-DAS-0001 | Mechanical Datasheet for Mainline Pump at IPS#1 |
| 14495-25-ME-DAS-0001 | Mechanical Datasheet for Mainline Pump at IPS#2 |
| 14495-45-ME-DAS-0001 | Mechanical Datasheet for Mainline Pump at IPS#3 |
| 14495-10-ME-DAS-0001 | Mechanical Datasheet for Mainline Pump at Vizag |
| 14495-20-ME-DAS-0001 | Mechanical Datasheet for Mainline Pump at Rajahmundry |
| 14495-30-ME-DAS-0001 | Mechanical Datasheet for Mainline Pump at Vijaywada |
| 14495-40-ME-DAS-0001 | Mechanical Datasheet for Mainline Pump at Suryapet |
| 14495-00-EL-DAS-0010 | Data Sheet for High Voltage Induction motor |
| 14495-00-EL-DAS-0011 | Data Sheet for Medium Voltage Induction motor |
| 14495-00-EL-DAS-0012 | Data Sheet for High Voltage Variable frequency drive |

**CLIENT:** HPCL

**PROJECT TITLE:** CAPACITY AUGUMENTATION OF VISAKHA-VIJAYWADA-SECUNDERABAD PIPELINE (VVSPL) PROJECT

**JOB NUMBER:** 403102-14495

**EQUIPMENT NUMBER:** 15-PA-CF-101A/B/C

**EQUIPMENT SERVICE:** MS, SKO, ATF, HSD, Naphtha

**SERIAL NUMBER:**

**REQ / SPEC NO. :** 14495-00-ME-REQ-0001

**PURCH ORDER NO.**

Cells coloured thus contain drop-down options

contain calculated values based on input data do not change.

identifies a cross referenced paraghaph in the document
note may also contain a drop down list

**COMMENTS:**

| | DATA SHEETS | | | | | |
|---|---|---|---|---|---|---|
| | ITEM No. | ATT | ITEM No. | ATT | ITEM No. | ATT |
| PUMP | | | | | | |
| MOTOR | | | | | | |
| GEAR | | | | | | |
| TURBINE | | | | | | |

APPLICABLE OVERLAY STANDARDS

| Rev | Date | Description | By | Checked | Approved | | | |
|---|---|---|---|---|---|---|---|---|
| | | | | | S.R Hatke | | | |
| D | 28.Feb.2017 | RE-ISSUED FOR INFORMATION | KAMY | RANS | HALS | | | |
| C | 23.Feb.2017 | RE-ISSUED FOR INFORMATION | KAMY | RANS | HALS | | | |
| B | 13.Feb.2017 | ISSUED FOR INFORMATION | KAMY | RANS | HALS | | | |
| A | 27.Jan.2017 | ISSUED FOR INTER DISCIPLINE CHECK | KAMY | HALS | HALS | | | |

**MECHANICAL DATASHEET FOR MAINLINE PUMPS AT IPS #1**

DATA SHEET No.

**14495-15-ME-DAS-0001**

Sheet 1 of 6

# MECHANICAL DATASHEET FOR MAINLINE PUMPS AT IPS #1

| | | | | | |
|---|---|---|---|---|---|
| APPLICABLE TO: | PROPOSAL | APPLICABLE NTL/INTNTL STANDARD: | API-610 | | Rev |
| FOR | VVSPL Capacity Aumentation Project | UNIT | Intermediate Pumping Station -1 (Existing IPS-1) | | |
| SITE | IPS 1 (MB Patnam Booster station) | SERVICE | IPS-1 Mainline Pumps | | |
| NO. REQ | 3 (2W + 1S) | PUMP SIZE | | TYPE | | No. STAGES | * |
| MANUFACTURER | * | MODEL | * | SERIAL NO. | |

**LIQUID CHARACTERISTICS**

| | Units | Maximum | Minimum |
|---|---|---|---|
| LIQUID TYPE OR NAME : | | HSD ( Note 3,6) | |
| VAPOR PRESSURE : | kg/cm2a | 0.7 (Note 15) | |
| RELATIVE DENSITY : | | 0.835 | |
| SPECIFIC HEAT : | kJ/(kg-K) | | |
| VISCOSITY : | cP | Note 7 | |

**OPERATING CONDITIONS (6.1.2)**

| | Units | Maximum | Rated | Normal | Minimum |
|---|---|---|---|---|---|
| NPSHa Datum: | | | C.L. Impeller | | |
| PUMPING TEMPERATURE : | ° C | 50.0 | 25.0 | | 15 |
| FLOW : | m3/hr | | 630 | | Note-8 |
| DISCHARGE PRESSURE : (6.3.2) | kg/cm2g | | 71 | | |
| SUCTION PRESSURE : | kg/cm2g | 7.4 (Max) (Note 25) | 4.43 | | |
| DIFFERENTIAL PRESSURE : | kg/cm2 | | 66.57 | | |
| DIFFERENTIAL HEAD : | m | | 798 | | |
| $NPSH_A$ : | m | | 55 | Note 17 | |
| HYDRAULIC POWER : | kW | | - | | |

| | |
|---|---|
| SERVICE : | CONTINUOUS |
| PUMPS OPERATE IN: | PARALLEL |
| CORROSION DUE TO : (6.12.1.9) | NIL |
| EROSION DUE TO : (6.12.1.9) | NIL |
| H2S CONCENTRATION (ppm) : (6.12.1.12) | Nil |
| CHLORIDE CONCENTRATION (ppm) : | Nil |
| PARTICULATE SIZE (DIA IN MICRONS) | Note 2 |
| PARTICULATE CONCENTRATION (PPM) | - |
| CORROSIVE | YES |
| EROSIVE | NO |
| FLAMMABLE | YES |
| TOXIC | NO |

C

**SITE AND UTILITY DATA**

LOCATION: INDOOR | UNHEATED | UNDER ROOF

MOUNTED AT : GRADE ❍ TROPICALISATION REQD

ELECTRIC AREA CLASSIFICATION: 6.1.22 ZONE 2

GROUP Group IIA | Group IIB TEMP CLASS T3

SITE DATA :

ELEVATION (MSL) : 59 m BAROMETER : ____ mmHg

RANGE OF AMBIENT TEMPS:MIN / MAX 16.3 / 42.4 °C

RELATIVE HUMIDITY: MIN / MAX ____ / ____ %

UNUSUAL CONDITIONS:

UTILITY CONDITIONS :

| ELECTRICITY : | DRIVERS | HEATING | CONTROL | SHUTDOWN |
|---|---|---|---|---|
| VOLTAGE | 6600 | 240 | | |
| PHASE | 3 | 1 | | |
| HERTZ | 50 | 50 | | |

COOLING WATER : (Not available) Note 4

| | INLET | RETURN | DESIGN |
|---|---|---|---|
| TEMP °K | | MAX | |
| PRESS. kPa | | MIN | |
| SOURCE | | | |

COOLING WATER CHLORIDE CONCENTRATION: ____ ppm

INSTRUMENT AIR : MAX ____ kPa MIN ____ kPa

STEAM

| | | DRIVERS | HEATING |
|---|---|---|---|
| TEMP °K | Max | | |
| | Min | | |
| PRESS. kPa | Max | | |
| | Min | | |

**PERFORMANCE (Note 9,11, 22 & 23)**

| | | |
|---|---|---|
| PROPOSAL CURVE NO. | RPM | |
| As Tested Curve No. | | |
| IMPELLER DIA.: RATED | MAX. | MIN. mm |
| RATED POWER | kW | EFFICIENCY (%) |
| RATED CURVE BEP FLOW (at rated impeller dia) | | m³/s |
| MIN FLOW : THERMAL | m³/s | STABLE m³/s |
| PREFERRED OPERATING REGION (6.1.11) | | to m³/s |
| ALLOWABLE OPERATING REGION | | to m³/s |
| MAX HEAD @ RATED IMPELLER | | m |
| MAX POWER @ RATED IMPELLER | (6.8.9) | kW |
| NPSH3 AT RATED FLOW : | | m |
| CL PUMP TO U/S BASEPLATE | | m |
| NPSH MARGIN AT RATED FLOW : | | m |
| SPECIFIC SPEED (6.1.9) | m3/s, rpm, m | |
| SUCTION SPECIFIC SPEED LIMIT | | |
| SUCTION SPECIFIC SPEED | m3/s, rpm, m | |
| MAX. ALLOW. SOUND PRESS. LEVEL REQD (6.1.14) | | 85 (dBA) |
| EST MAX SOUND PRESS. LEVEL | | (dBA) |
| MAX. SOUND POWER LEVEL REQ'D (6.1.14) | | |
| EST MAX SOUND POWER LEVEL | | |

**DRIVER (7.1.5) (Note 5 & 10)**

| | |
|---|---|
| Driver Type | MOTOR |
| GEAR | |
| VARIABLE SPEED REQUIRED | YES |
| SOURCE OF VARIABLE SPEED | Motor |
| OTHER | VFD |
| MANUFACTURER | |
| NAMEPLATE POWER | kW |
| Nominal RPM | |
| RATED LOAD RPM | |
| FRAME OR MODEL | |
| ORIENTATION | HORIZONTAL |
| LUBE | |
| BEARING TYPE: | |
| RADIAL | / |
| THRUST | / |
| STARTING METHOD | Open Valve (Fully-Loaded) |
| SEE DRIVER DATA SHEET | |

# MECHANICAL DATASHEET FOR MAINLINE PUMPS AT IPS #1

| 1 | Note | CONSTRUCTION | Rev |
|---|---|---|---|

**API PUMP TYPE:** *BB3* **[Based on API 610 definitions]**

**NOZZLE CONNECTIONS:** (6.5.5) **(Note 12 & 21)**

| | Size | Facing | Rating | Position |
|---|---|---|---|---|
| SUCTION | | | | *SIDE* |
| DISCHARGE | | | | *SIDE* |

**PRESSURE CASING AUX. CONNECTIONS: (6.4.3.2)**

| | No. | Size | Type | Facing | Rating | Posn. |
|---|---|---|---|---|---|---|
| BALANCE/LEAK OFF | | | | | | |
| DRAIN | | | | | | |
| VENT | | | | | | |
| PRESSURE GAGE | | | | | | |
| TEMP GAGE | | | | | | |
| WARM-UP LINE | | | | | | |

Drain Valve Supplied By: SUPPLIER
DRAINS MANIFOLDED: YES
VENT Valve Supplied By: SUPPLIER
VENTS MANIFOLDED: YES
THREADED CONS FOR PIPELINE SERVICE & < 50°C (6.4.3.2)
SPECIAL FITTINGS FOR TRANSITIONING (6.4.3.3)
CYLINDRICAL THREADS REQUIRED (6.4.3.8)
GUSSET SUPPORT REQUIRED
MACHINED AND STUDDED CONNECTIONS (6.4.3.12)
VS 6 DRAIN: N/A
DRAIN TO SKID EDGE: YES

**MATERIAL (6.12.1.1)**

APPENDIX H CLASS: S-6 **(Note 26)**
MIN DESIGN METAL TEMP (6.12.4.1) °K
REDUCED-HARDNESS MATERIALS REQ'D (6.12.1.12.1)
Applicable Hardness Standard (6.12.1.12.3)
BARREL :
CASE : Killed Carbon Steel (KCS)
DIFFUSERS
IMPELLER :
IMPELLER WEAR RING :
CASE WEAR RING :
SHAFT:
Bowl (if VS-type)
Inspection Class

**BEARINGS AND LUBRICATION (6.10.1.1)**

BEARING (TYPE / NUMBER): (6.11.4)
RADIAL /
THRUST /
REVIEW AND APPROVE THRUST BEARING SIZE : (9.2.5.2.4)

LUBRICATION : (6.10.2.2) (6.11.3) (9.6.1)
PRESSURE LUBE SYSTEM TO ISO 10438- (9.2.6.5)
ISO 10438 DATA SHEETS ATTACHED
Pressurized Lube Oil System mtd on pump baseplate
Location of Pressurized Lube Oil System mounted on baseplate :

INTERCONNECTING PIPING PROVIDED BY

OIL VISC. ISO GRADE VG
CONSTANT LEVEL OILER :

**CASING MOUNTING:** CENTERLINE (D)
**CASING TYPE:** (6.3.10)
OH3 BACKPULLOUT LIFTING DEVICE REQD. (9.1.2.6)

**CASE PRESSURE RATING:**
MAWP : (6.3.6) kPa @ °K (D)
HYDROTEST : kPa @ °K (D)

**HYDROTEST OH PUMP AS ASSEMBLY**
SUCT'N PRESS. REGIONS DESIGNED FOR MAWP: YES
**ROTATION:** (VIEWED FROM COUPLING END)
- IMPELLERS INDIVIDUALLY SECURED :
- BOLT OH 3/4/5 PUMP TO PAD / FOUNDATION :
- PROVIDE SOLEPLATE FOR OH 3/4/5 PUMPS

**ROTOR:**
SHAFT FLEXIBILITY INDEX (SFI) (9.1.1.3)
First Critical Speed Wet (Multi stage pumps only)
COMPONENT BALANCE TO ISO 1940 G1.0
SHRINK FIT -LIMITED MOVEMENT IMPELLERS (9.2.2.3)

**COUPLING:(7.2.3)** **(7.2.13.f)**
MANUFACTURER
MODEL
RATING (POWER/100 RPM)
SPACER LENGTH mm
SERVICE FACTOR
RIGID
COUPLING WITH HYDRAULIC FIT (7.2.10)
COUPLING BALANCED TO ISO 1940-1 G6.3 (7.2.3)
COUPLING WITH PROPRIETARY CLAMPING DEVICE (7.2.11)

COUPLING IN COMPLIANCE WITH (7.2.4)
COUPLING GUARD STANDARD PER (7.2.13.a)
Window on Coupling Guard

**BASEPLATE**

API BASEPLATE NUMBER :
BASEPLATE CONSTRUCTION (7.3.14)
BASEPLATE DRAINAGE (7.3.1)
MOUNTING :
NON-GROUT CONSTRUCTION : (7.3.13)
VERTICAL LEVELING SCREWS :
LONGITUDINAL DRIVER POSITIONING SCREWS :
SUPPLIED WITH :
- GROUT AND VENT HOLES
- DRAIN CONNECTION

MOUNTING PADS SIZED FOR BASEPLATE LEVELING (7.3.5)
MOUNTING PADS TO BE MACHINED (7.3.6)
PROVIDE SPACER PLATE UNDER ALL EQUIPMENT FEET
OTHER

**REMARKS :**

# MECHANICAL DATASHEET FOR MAINLINE PUMPS AT IPS #1

| 1 | Note | INSTRUMENTATION (Note-13 & 16) | |
|---|---|---|---|
| 2 | | SEE ATTACHED API-670 DATA SHEET | |
| 3 | | ACCELEROMETER (7.4.2.1) | |
| 4 | | Number of Accelerometers | |
| 5 | | Mounting Location of Accelerometers | |
| 6 | | | |
| 7 | | PROVISION FOR MTG ONLY (6.10.2.10) | |
| 8 | | Number of Accelerometers | |
| 9 | | Mounting Location of Accelerometers | |
| 10 | | | |
| 11 | | FLAT SURFACE REQUIRED (6.10.2.11) | |
| 12 | | Number of Accelerometers | |
| 13 | | Mounting Location of Accelerometers | |
| 14 | | | |
| 15 | | VIBRATION PROBES (7.4.2.2) | |
| 16 | | PROVISIONS FOR VIB. PROBES | YES |
| 17 | | NUMBER PER RADIAL BEARING | |
| 18 | | NUMBER PER AXIAL BEARING | TWO |
| | | | |
| 19 | | MONITORS AND CABLES SUPPLIED BY (7.4.2.4) | |
| 20 | | | |
| 21 | | TEMPERATURE (7.4.2.3) | |
| 22 | | PROVISIONS FOR TEMP PROBES | YES |
| 23 | | RADIAL BEARING TEMP. | YES |
| 24 | | NUMBER PER RADIAL BEARING | |
| 25 | | THRUST BEARING TEMP. | YES |
| 26 | | NUMBER PER THRUST BEARING ACTIVE SIDE | |
| 27 | | NUMBER PER THRUST BEARING INACTIVE SIDE | |
| 28 | | TEMP. GAUGES (WITH THERMOWELLS) (9.1.3.6) | |
| 29 | | PRESSURE GAUGE TYPE | |
| 30 | | **Remarks** | |
| 31 | | **1) Vendor to provide temperature and vibration** | |
| 32 | | **monitoring system for Pumps.** | |
| 33 | | **2) Vendor to provide pump casing temperature RTD.** | |
| 34 | | | |
| 35 | | | |
| 36 | | | |
| 37 | | | |
| 38 | | | |
| 39 | | | |
| 40 | | | |
| 41 | | | |
| 42 | | | |
| 43 | | | |
| 44 | | | |
| 45 | | | |
| 46 | | | |
| 47 | | | |
| 48 | | | |
| 49 | | | |
| 50 | | | |
| 51 | | | |
| 52 | | | |
| 53 | | | |
| 54 | | | |
| 55 | | | |
| 56 | | | |
| 57 | | | |
| 58 | | | |
| 59 | | | |
| 60 | | | |
| 61 | | | |
| 62 | | | |
| 63 | | | |
| 64 | | | |
| 65 | | | |

| SEAL SUPPORT SYSTEM MOUNTING | | Rev |
|---|---|---|
| SEAL SUPPORT SYSTEM MOUNTED ON PUMP BASEPLATE (7.5.1.4) | | |
| IDENTIFY LOCATION ON BASEPLATE | | |
| INTERCONNECTING PIPING BY | Supplier | |

| MECHANICAL SEAL (6.8.1) (Note 19 & 25) | |
|---|---|
| SEE ATTACHED ISO 21049/API 682 DATA SHEET | |
| ADDITIONAL CENTRAL FLUSH PORT (6.8.9) | |
| HEATING JACKET REQ'D. (6.8.11) | |

| HEATING AND COOLING (6.1.17) | | |
|---|---|---|
| COOLING REQ'D | | |
| COOLING WATER PIPING PLAN | | |
| COOLING WATER PIPING | | |
| FITTINGS | | |
| COOLING WATER PIPING MATERIALS | | |
| COOLING WATER REQUIREMENTS: | | |
| BEARING HOUSING | | $m^3/s$ |
| HEAT EXCHANGER | | $m^3/s$ |
| TOTAL COOLING WATER | | $m^3/s$ |
| HEATING MEDIUM | | |
| OTHER | | |
| HEATING PIPING | | |

| PIPING & APPURTENANCES | |
|---|---|
| MANIFOLD PIPING FOR PURCHASER CONNECTION (7.5.1.6) | |
| VENT | YES |
| DRAIN | YES |
| COOLING WATER | N / A |
| TAG ALL ORIFICES (7.5.2.4) | |
| SOCKET WELD CONN ON SEAL GLAND (7.5.2.8) | |

# MECHANICAL DATASHEET FOR MAINLINE PUMPS AT IPS #1

| 1 | Note | SURFACE PREPARATION AND PAINT | | TEST | | Rev |
|---|---|---|---|---|---|---|
| 2 | | MANUFACTURER'S STANDARD | YES | SHOP INSPECTION (8.1.1) | Yes | |
| 3 | | OTHER (SEE BELOW) | YES | PERFORMANCE CURVE | | |
| 4 | | SPECIFICATION NO. 14495-00-PE-SPC-0005 | | & DATA APPROVAL PRIOR TO SHIPMENT. | YES | |
| 5 | | | | TEST WITH SUBSTITUTE SEAL (8.3.3.2.b) | | |
| 6 | | **PUMP:** | | MATERIAL CERTIFICATION REQUIRED CASING | YES | |
| 7 | | PUMP SURFACE PREPARATION | | (6.12.1.8) IMPELLER | YES | |
| 8 | | PRIMER | | SHAFT | YES | |
| 9 | | FINISH COAT | | OTHER | YES | |
| 10 | | | | CASTING REPAIR WELD PROCEDURE APPR REQD | YES | |
| | | **BASEPLATE:** | | (6.12.2.5) (6.12.3.1) | | |
| 11 | | BASEPLATE SURFACE PREPARATION | | INSPECTION REQUIRED FOR CONNECTION WELDS (6.12.3.4.d) | | |
| 12 | | PRIMER: | | (6.12.3.4.e) MAG PARTICLE | YES | |
| 13 | | FINISH COAT | | RADIOGRAPHY | | |
| 14 | | DETAILS OF LIFTING DEVICES | | LIQUID PENETRANT | YES | |
| 15 | | | | ULTRASONIC | YES | |
| 16 | | **SHIPMENT: (8.4.1)** | | INSPECTION REQUIRED FOR CASTINGS | | |
| 17 | | EXPORT BOXING REQUIRED | YES | MAG PARTICLE | YES | |
| 18 | | OUTDOOR STORAGE MORE THAN 6 MONTHS | YES | RADIOGRAPHY | | |
| | | | | LIQUID PENETRANT | YES | |
| 19 | | **SPARE ROTOR ASSEMBLY PACKAGED FOR:** | | ULTRASONIC | YES | |
| 20 | | ROTOR STORAGE ORIENTATION (9.2.8.2) | | HARDNESS TEST REQUIRED (8.2.2.7) | | |
| 21 | | SHIPPING & STORAGE CONTAINER FOR VERT STORAGE (9.2.8.3) | | ADDNL SUBSURFACE EXAMINATION (6.12.1.5) (8.2.1.3) | | |
| 22 | | | | FOR | | |
| 23 | | N2 PURGE (9.2.8.4) | | METHOD | | |
| 24 | | **SPARE PARTS** | | PMI TESTING REQUIRED (8.2.2.8) | | |
| 25 | | START-UP | | COMPONENTS TO BE TESTED | | |
| 26 | | NORMAL MAINTENANCE | | | | |
| 27 | | **WEIGHTS** kg | | RESIDUAL UNBALANCE TEST (J.4.1.2) | | |
| 28 | | ITEM No / PUMP / DRIVER / GEAR / BASE / TOTAL | | NOTIFICATION OF SUCCESSFUL SHOP | | |
| 29 | | | | PERFORMANCE TEST (8.1.1.c) (8.3.3.5) | | |
| 30 | | | | BASEPLATE TEST (7.3.21) | | |
| 31 | | | | HYDROSTATIC | WIT | |
| 32 | | | | HYDROSTATIC TEST OF BOWLS & COLUMN (9.3.13.2) | | |
| 33 | | **OTHER PURCHASER REQUIREMENTS** | | PERFORMANCE TEST | WIT | |
| 34 | | COORDINATION MEETING REQUIRED (10.1.3) | YES | TEST IN COMPLIANCE WITH (8.3.3.2) | | |
| 35 | | MAXIMUM DISCHARGE PRESSURE TO INCLUDE | | TEST DATA POINTS TO (8.3.3.3) | | |
| 36 | | MAX RELATIVE DENSITY | YES | TEST TOLERANCES TO (8.3.3.4) | | |
| 37 | | OPERATION TO TRIP SPEED | | NPSH (8.3.4.3.1) (8.3.4.3.4) | WIT | |
| 38 | | MAX DIA. IMPELLERS AND/OR NO OF STAGES | | NPSH-1ST STG ONLY (8.3.4.3.2) | | |
| 39 | | CONNECTION DESIGN APPROVAL (9.2.1.4) | | NPSH TESTING TO HI 1.6 OR ISO 9906 (8.3.4.3.3) | | |
| 40 | | TORSIONAL ANALYSIS / REPORT (6.9.2.10) | YES | TEST NPSHA LIMITED TO 110% SITE NPSHA (8.3.3.6) | | |
| 41 | | PROGRESS REPORTS | YES | RETEST ON SEAL LEAKAGE (8.3.3.2.d) | | |
| 42 | | OUTLINE OF PROC FOR OPTIONAL TESTS (10.2.5) | | RETEST REQUIRED AFTER FINAL HEAD ADJ (8.3.3.7.b) | | |
| 43 | | ADDITIONNAL DATA REQUIRING 20 YEARS RETENTION (8.2.1.1) | | COMPLETE UNIT TEST (8.3.4.4.1) | WIT | |
| 44 | | | | SOUND LEVEL TEST (8.3.4.5) | WIT | |
| 45 | | LATERAL ANALYSIS REQUIRED (9.1.3.4) (9.2.4.1.3) | YES | CLEANLINESS PRIOR TO FINAL ASSEMBLY (8.2.2.6) | | |
| 46 | | MODAL ANALYSIS REQUIRED (9.3.9.2) | | LOCATION OF CLEANLINESS INSPECTION | | |
| 47 | | DYNAMIC BALANCE ROTOR (6.9.4.4) | YES | NOZZLE LOAD TEST | | |
| 48 | | INSTALLATION LIST IN PROPOSAL (10.2.3.l) | YES | CHECK FOR CO-PLANAR MOUNTING PAD SURFACES | | |
| 49 | | VFD STEADY STATE DAMPED RESPONSE ANALYSIS (6.9.2.3) | | MECHANICAL RUN TEST UNTIL OIL TEMP STABLE | | |
| 50 | | | | 4 HR. MECH RUN AFTER OIL TEMP STABLE (8.3.4.2.1) | | |
| 51 | | TRANSIENT TORSIONAL RESPONSE (6.9.2.4) | | 4 HR. MECH RUN TEST (8.3.4.2.2) | WIT | |
| 52 | | BEARING LIFE CALCULATIONS REQUIRED (6.10.1.6) | | 2 HR AT MINIMUM CONTINUOUS FLOW | WIT | |
| | | IGNITION HAZARD ASSMT TO EN 13463-1 (7.2.13.e) | | BRG HSG RESONANCE TEST (8.3.4.7) | | |
| 53 | | CASING RETIREMENT THICKNESS DRAWING (10.3.2.3) | | STRUCTURAL RESONANCE TEST (9.3.9.2) | | |
| 54 | | FLANGES RQD IN PLACE OF SKT WELD UNIONS (7.5.2.8) | | REMOVE / INSPECT HYDRODYNAMIC BEARINGS AFTER TEST | | |
| 55 | | INCLUDE PLOTTED VIBRATION SPECTRA (6.9.3.3) | | (9.2.7.5) | | |
| 56 | | CONNECTION BOLTING (7.5.1.7) | | AUXILIARY EQUIPMENT TEST (8.3.4.6) | | |
| 57 | | CADMIUM PLATED BOLTS PROHIBITED | | EQUIPMENT TO BE INCLUDED IN AUXILLIARY TESTS | | |
| 58 | | VENDOR TO KEEP REPAIR AND HT RCDS (8.2.1.1.c) | YES | | | |
| 59 | | VENDOR SUBMIT TEST PROCEDURES (8.3.1.1) | YES | LOCATION OF AUXILIARY EQUIPENT TEST | | |
| 60 | | SUBMIT INSPECTION CHECK LIST (8.1.5) | | | | |
| 61 | | | | IMPACT TEST (6.12.4.3) PER EN 13445 | | |
| 62 | | | | PER ASME SECTION VIII | | |
| | | | | REMOVE CASING AFTER TEST | | |

## NOTES

| Note | | Rev |
|---|---|---|
| 1 | All data in blank fields in this data sheet to be furnished / confirmed by Supplier. | |
| 2 | Pumps shall be able to handle particles below 400 microns. Pump offered by the vendor shall be suitable for a fluid with particle size that may pass through a 40 mesh and 20 mesh during commissioning. | |
| 3 | Rated conditions will be based on operating conditions (temperature 25 deg C) and HSD fluid properties. | |
| 4 | Vendor to note that there is no utility available in the plant. Hence any cooling requirement shall be met by ambient air cooling. | |
| 5 | *Variable Frequency Drive (VFD) shall be provided for capacity control of pumps.*<br>*Pump rated speed is the speed at which rated pump condition is achieved.*<br>*VFD & Motor shall be selected for 110% of pump rated speed.*<br>*Vendor shall provide necessary documentation justifying motor selection along with bid.*<br>*Along with Bid; Vendor to provide pump performance curve for 110% of rated speed.*<br>*Vendor to indicate maximum flow achievable at 110% of pump rated speed & at 100 % rated head. (This point shall be preferably within the region of 80% to 110% of best efficiency flowrate of pump.*<br>*Pump and Pump sub-systems like Mechanical seal, Lube oil system etc. shall be selected to run at 110% of pump rated speed.* | C |
| 6 | Centrifugal type pump shall conform to the requirement of API-610. Selection, operation and maintenance of pump shall be as per OISD-STD-119, 141. | |
| 7 | The products that shall be pumped and their corresponding properties are as follows: | |

| Product | Sp. Gravity at $15^0$ C | Viscosity at $38^0$ C | Viscosity at $20^0$ C | Vapour Pressure at $38^0$ C |
|---|---|---|---|---|
| | - | Cst | Cst | $kg/cm^2a$ |
| -HSD | 0.821 – 0.845 | 2.15 @ 40 ° C | 4.5 | 0.1 |
| - MS | 0.729-0.773 | 0.51 | 0.7 | 0.6 |
| - SKO | 0.790 -0.830 | 1.18 | 1.53 | 0.3 |
| - NAPHTHA | 0.6965 | 0.45 | 0.7 | 0.7 |
| - ATF | 0.8105 | 1.18 | 1.53 | 0.3 |

| Note | | Rev |
|---|---|---|
| 8 | Automatic Minimum Recirculation Valve for each pump shall be provided. Valve shall be selected for pump minimum continuous stable flow. | |
| 9 | The pump performance curves shall be furnished at 200 rpm increments between the minimum and maximum speeds. | |
| 10 | Motor to be designed at end of the curve operation considering VFD operation. | |
| 11 | Shut off pressure of pump should not exceed 84 kg/cm2g (for maximum suction pressure of 7.4 kg/cm2g) | |
| 12 | Companion flanges, gaskets, nuts & bolts for Pump suction / discharge, ARV, Vent, drain & any other purchaser's interface nozzles alongwith spares specified in requisition are in vendor's scope. | |
| 13 | All pump safety requirements, instrumentation,sensors,alarms,trips, etc shall be provided by pump vendor. | |
| 14 | No negative tolerance on flow and head is acceptable. | |
| 15 | Vapour Pressure as conservative approach of 0.7 kg/cm2a of Naptha is considered. | |
| 16 | Pump Shall be provided with Vibration Monitoring System (VMS) | |
| 17 | Difference between NPSHA and NPSHR shall be minimum 1.0 m at throughout the range from minimum continuous stable flow up to end of curve. Refer requisition for NPSH test requirement. | |
| 18 | Deleted | D |
| 19 | Pumps shall be provided with double mechanical seal. Seal Plan 31, 52 & 65 are required as a minimum. However, Vendor to confirm it with seal supplier. Mechanical seal shall withstand the maximum discharge pressure and the maximum allowable temperature. The pump Vendor shall advise in his Bid of the maximum dynamic and static sealing pressure and temperature. Vendor to submit Seal supplier's recommendation along with bid. | |
| 20 | Pump vendor to provide Position sensors for Pump vent & drain valves. | |
| 21 | 600# rating flange shall be WN RF type and 900# rating flange shall be WN RTJ type | |
| 22 | Pumps shall have a head rise from the rated point to shut-off not less than 10% and not greater than 15%. | |
| 23 | Vendor to provide performance curve for two pumps operating in parallel in addition to single pump operation for all speeds. | |
| 24 | Vendor to note that, during commissioning, water with specific gravity 1 shall be used as a pumping fluid. Vendor to provide flowrate of water. | |
| 25 | During start-up when upstream and downstream stations are pumping at turn down rate and this pump kicks-in, the suction pressure could be 30-35 kg/cm2g. However, this pressure will be lowered to rated suction pressure value as pump comes online. On shutdown of this pump, pump may experience same pressure (i.e. 30-35 kg/cm2g). Maximum discharge pressure shall be calculated considering this case. Pump mechanical seal shall be suitable for this pressure. | |
| 26 | Casing Material shall be Killed Carbon Steel (KCS), other parts materials shall be as per material class S-6. | |

**CLIENT:** HPCL

**PROJECT TITLE:** CAPACITY AUGUMENTATION OF VISAKHA-VIJAYWADA-SECUNDERABAD PIPELINE (VVSPL) PROJECT

**JOB NUMBER:** 403102-14495

**EQUIPMENT NUMBER:** 25-PA-CF-101A/B/C

**EQUIPMENT SERVICE:** MS, SKO, ATF, HSD, Naphtha

**SERIAL NUMBER:**

**REQ / SPEC NO. :** 14495-00-ME-REQ-0001

**PURCH ORDER NO.**

Cells coloured thus contain drop-down options

contain calculated values based on input data do not change.

identifies a cross referenced paraghaph in the document
note may also contain a drop down list

**COMMENTS:**

| | DATA SHEETS | | | | | |
|---|---|---|---|---|---|---|
| | ITEM No. | ATT | ITEM No. | ATT | ITEM No. | ATT |
| PUMP | | | | | | |
| MOTOR | | | | | | |
| GEAR | | | | | | |
| TURBINE | | | | | | |

APPLICABLE OVERLAY STANDARDS

| Rev | Date | Description | By | Checked | Approved | | | |
|---|---|---|---|---|---|---|---|---|
| | | | | | S.R. Halke | | | |
| D | 28.Feb.2017 | RE-ISSUED FOR INFORMATION | KAMY | RANS | HALS | | | |
| C | 23.Feb.2017 | RE-ISSUED FOR INFORMATION | KAMY | RANS | HALS | | | |
| B | 13.Feb.2017 | ISSUED FOR INFORMATION | KAMY | RANS | HALS | | | |
| A | 27.Jan.2017 | ISSUED FOR INTER DISCIPLINE CHECK | KAMY | HALS | HALS | | | |

**MECHANICAL DATASHEET FOR MAINLINE PUMPS AT IPS #2**

DATA SHEET No.

**14495-25-ME-DAS-0001**

Sheet 1 of 6

# MECHANICAL DATASHEET FOR MAINLINE PUMPS AT IPS #2

| | | | | | |
|---|---|---|---|---|---|
| 1 | Note | APPLICABLE TO: | PROPOSAL | APPLICABLE NTL/INTNTL STANDARD: | API-610 |
| 2 | | FOR | VVSPL Capacity Aumentation Project | UNIT | Intermediate Pumping Station -2 (Existing IPS-2) |
| 3 | | SITE | IPS 2 (JK Gudem Booster station) | SERVICE | IPS-2 Mainline Pumps |
| 4 | | NO. REQ | 3 (2W + 1S) | PUMP SIZE | TYPE / No. STAGES * |
| 5 | | MANUFACTURER | * | MODEL | * / SERIAL NO. |

## LIQUID CHARACTERISTICS

| | Units | Maximum | Minimum |
|---|---|---|---|
| LIQUID TYPE OR NAME : | HSD ( Note 3,6) | | |
| VAPOR PRESSURE : | kg/cm2a | 0.7 (Note 15) | |
| RELATIVE DENSITY : | | 0.835 | |
| SPECIFIC HEAT : | kcal/(kg-K) | | |
| VISCOSITY : | cP | Note 7 | |

| | |
|---|---|
| SERVICE : | CONTINUOUS |
| PUMPS OPERATE IN: | PARALLEL |
| CORROSION DUE TO : (6.12.1.9) | NIL |
| EROSION DUE TO : (6.12.1.9) | NIL |
| H2S CONCENTRATION (ppm) : (6.12.1.12) | Nil |
| CHLORIDE CONCENTRATION (ppm) : | Nil |
| PARTICULATE SIZE (DIA IN MICRONS) | Note 2 |
| PARTICULATE CONCENTRATION (PPM) | - |
| CORROSIVE | YES |
| EROSIVE | NO |
| FLAMMABLE | YES |
| TOXIC | NO |

## OPERATING CONDITIONS (6.1.2)

| | Units | Maximum | Rated | Normal | Minimum |
|---|---|---|---|---|---|
| NPSHa Datum: | | | C.L. Impeller | | |
| PUMPING TEMPERATURE : | ° C | 50.0 | 25.0 | | 15 |
| FLOW : | m3/hr | | 630 | | Note-8 |
| DISCHARGE PRESSURE : (6.3.2) | kg/cm2g | | 71 | | |
| SUCTION PRESSURE : | kg/cm2g | 8.6 (Max) (Note 25) | 5.60 | | |
| DIFFERENTIAL PRESSURE : | kg/cm2 | | 65.60 | | |
| DIFFERENTIAL HEAD : | m | | 785 | | |
| $NPSH_A$ : | m | | 69 | Note 17 | |
| HYDRAULIC POWER : | kW | | - | | |

Rev: C

## SITE AND UTILITY DATA

**LOCATION:** INDOOR / UNHEATED / UNDER ROOF

**MOUNTED AT :** GRADE ❍ TROPICALISATION REQD

**ELECTRIC AREA CLASSIFICATION:** 6.1.22 ZONE 2

GROUP Group IIA | Group IIB TEMP CLASS T3

**SITE DATA :**

**ELEVATION (MSL) :** 90 m **BAROMETER :** ____ mmHg

RANGE OF AMBIENT TEMPS:MIN / MAX 15.5 / 46.7 °C

RELATIVE HUMIDITY: MIN / MAX ____ / ____ %

**UNUSUAL CONDITIONS:**

**UTILITY CONDITIONS :**

| **ELECTRICITY :** | DRIVERS | HEATING | CONTROL | SHUTDOWN |
|---|---|---|---|---|
| VOLTAGE | 6600 | 240 | | |
| PHASE | 3 | 1 | | |
| HERTZ | 50 | 50 | | |

**COOLING WATER :** (Not available) Note 4

| | INLET | RETURN | DESIGN |
|---|---|---|---|
| TEMP °C | | MAX | |
| PRESS. kg/cm²g | | MIN | |

SOURCE

COOLING WATER CHLORIDE CONCENTRATION: ____ ppm

**INSTRUMENT AIR :** MAX ____ kg/cm²g MIN ____ kg/cm²g

**STEAM**

| | | DRIVERS | HEATING |
|---|---|---|---|
| TEMP °C | Max | | |
| | Min | | |
| PRESS. kg/cm²g | Max | | |
| | Min | | |

## PERFORMANCE (Note 9, 11, 23 & 24)

| | | |
|---|---|---|
| PROPOSAL CURVE NO. | RPM | |
| As Tested Curve No. | | |
| IMPELLER DIA.: RATED | MAX. / MIN. | mm |
| RATED POWER | kW EFFICIENCY | (%) |
| RATED CURVE BEP FLOW (at rated impeller dia) | | m³/h |
| MIN FLOW : THERMAL | m³/h STABLE | m³/h |
| PREFERRED OPERATING REGION (6.1.11) | to | m³/h |
| ALLOWABLE OPERATING REGION | to | m³/h |
| MAX HEAD @ RATED IMPELLER | | m |
| MAX POWER @ RATED IMPELLER | (6.8.9) | kW |
| NPSH3 AT RATED FLOW : | | m |
| CL PUMP TO U/S BASEPLATE | | m |
| NPSH MARGIN AT RATED FLOW : | | m |
| SPECIFIC SPEED (6.1.9) | m3/h, rpm, m | |
| SUCTION SPECIFIC SPEED LIMIT | | |
| SUCTION SPECIFIC SPEED | m3/h, rpm, m | |
| MAX. ALLOW. SOUND PRESS. LEVEL REQD (6.1.14) | 85 | (dBA) |
| EST MAX SOUND PRESS. LEVEL | | (dBA) |
| MAX. SOUND POWER LEVEL REQ'D (6.1.14) | | |
| EST MAX SOUND POWER LEVEL | | |

## DRIVER (7.1.5) (Note 5 & 10)

| | |
|---|---|
| Driver Type | MOTOR |
| GEAR | |
| VARIABLE SPEED REQUIRED | YES |
| SOURCE OF VARIABLE SPEED | Motor |
| OTHER | VFD |
| MANUFACTURER | |
| NAMEPLATE POWER | kW |
| Nominal RPM | |
| RATED LOAD RPM | |
| FRAME OR MODEL | |
| ORIENTATION | HORIZONTAL |
| LUBE | |
| BEARING TYPE: | |
| RADIAL | / |
| THRUST | / |
| STARTING METHOD | Open Valve (Fully-Loaded) |
| SEE DRIVER DATA SHEET | |

# MECHANICAL DATASHEET FOR MAINLINE PUMPS AT IPS #2

| 1 | Note | CONSTRUCTION | Rev |
|---|---|---|---|

**API PUMP TYPE:** *BB3* **[Based on API 610 definitions]**

**NOZZLE CONNECTIONS:** (6.5.5) **(Note 12 & 22)**

| | Size | Facing | Rating | Position |
|---|---|---|---|---|
| SUCTION | | | | *SIDE* |
| DISCHARGE | | | | *SIDE* |

**PRESSURE CASING AUX. CONNECTIONS: (6.4.3.2)**

| | No. | Size | Type | Facing | Rating | Posn. |
|---|---|---|---|---|---|---|
| BALANCE/LEAK OFF | | | | | | |
| DRAIN | | | | | | |
| VENT | | | | | | |
| PRESSURE GAGE | | | | | | |
| TEMP GAGE | | | | | | |
| WARM-UP LINE | | | | | | |

Drain Valve Supplied By: **SUPPLIER**
DRAINS MANIFOLDED: **YES**
VENT Valve Supplied By: **SUPPLIER**
VENTS MANIFOLDED: **YES**
THREADED CONS FOR PIPELINE SERVICE & < 50°C (6.4.3.2)
SPECIAL FITTINGS FOR TRANSITIONING (6.4.3.3)
CYLINDRICAL THREADS REQUIRED (6.4.3.8)
GUSSET SUPPORT REQUIRED
MACHINED AND STUDDED CONNECTIONS (6.4.3.12)
VS 6 DRAIN: **N/A**
DRAIN TO SKID EDGE: **YES**

**MATERIAL (6.12.1.1)**

APPENDIX H CLASS: **S-6** **(Note 26)**
MIN DESIGN METAL TEMP (6.12.4.1) °C
REDUCED-HARDNESS MATERIALS REQ'D (6.12.1.12.1)
Applicable Hardness Standard (6.12.1.12.3)
BARREL :
CASE : **Killed Carbon Steel (KCS)**
DIFFUSERS
IMPELLER :
IMPELLER WEAR RING :
CASE WEAR RING :
SHAFT:
Bowl (if VS-type)
Inspection Class

**BEARINGS AND LUBRICATION (6.10.1.1)**

BEARING (TYPE / NUMBER): (6.11.4)
RADIAL /
THRUST /
REVIEW AND APPROVE THRUST BEARING SIZE : (9.2.5.2.4)

LUBRICATION : (6.10.2.2) (6.11.3) (9.6.1)
PRESSURE LUBE SYSTEM TO ISO 10438- (9.2.6.5)
ISO 10438 DATA SHEETS ATTACHED
Pressurized Lube Oil System mtd on pump baseplate
Location of Pressurized Lube Oil System mounted on baseplate :

INTERCONNECTING PIPING PROVIDED BY

OIL VISC. ISO GRADE VG
CONSTANT LEVEL OILER :

**CASING MOUNTING:** **CENTERLINE** D
**CASING TYPE:** (6.3.10)
OH3 BACKPULLOUT LIFTING DEVICE REQD. (9.1.2.6)

**CASE PRESSURE RATING:**
MAWP : (6.3.6) kg/cm²g @ °C D
HYDROTEST : kg/cm²g @ °C D

**HYDROTEST OH PUMP AS ASSEMBLY**
SUCT'N PRESS. REGIONS DESIGNED FOR MAWP: **YES**
**ROTATION:** (VIEWED FROM COUPLING END)
- IMPELLERS INDIVIDUALLY SECURED :
- BOLT OH 3/4/5 PUMP TO PAD / FOUNDATION :
- PROVIDE SOLEPLATE FOR OH 3/4/5 PUMPS

**ROTOR:**
SHAFT FLEXIBILITY INDEX (SFI) (9.1.1.3)
First Critical Speed Wet (Multi stage pumps only)
COMPONENT BALANCE TO ISO 1940 G1.0
SHRINK FIT -LIMITED MOVEMENT IMPELLERS (9.2.2.3)

**COUPLING:(7.2.3)** **(7.2.13.f)**
MANUFACTURER
MODEL
RATING (POWER/100 RPM)
SPACER LENGTH mm
SERVICE FACTOR
RIGID
COUPLING WITH HYDRAULIC FIT (7.2.10)
COUPLING BALANCED TO ISO 1940-1 G6.3 (7.2.3)
COUPLING WITH PROPRIETARY CLAMPING DEVICE (7.2.11)
COUPLING IN COMPLIANCE WITH (7.2.4)
COUPLING GUARD STANDARD PER (7.2.13.a)
Window on Coupling Guard

**BASEPLATE**

API BASEPLATE NUMBER :
BASEPLATE CONSTRUCTION (7.3.14)
BASEPLATE DRAINAGE (7.3.1)
MOUNTING :
NON-GROUT CONSTRUCTION : (7.3.13)
VERTICAL LEVELING SCREWS :
LONGITUDINAL DRIVER POSITIONING SCREWS :
SUPPLIED WITH :
- GROUT AND VENT HOLES
- DRAIN CONNECTION

MOUNTING PADS SIZED FOR BASEPLATE LEVELING (7.3.5)
MOUNTING PADS TO BE MACHINED (7.3.6)
PROVIDE SPACER PLATE UNDER ALL EQUIPMENT FEET
OTHER

**REMARKS :**

# MECHANICAL DATASHEET FOR MAINLINE PUMPS AT IPS #2

| 1 | Note | INSTRUMENTATION (Note-13 & 16) | |
|---|---|---|---|
| 2 | | SEE ATTACHED API-670 DATA SHEET | |
| 3 | | ACCELEROMETER (7.4.2.1) | |
| 4 | | Number of Accelerometers | |
| 5 | | Mounting Location of Accelerometers | |
| 6 | | | |
| 7 | | PROVISION FOR MTG ONLY (6.10.2.10) | |
| 8 | | Number of Accelerometers | |
| 9 | | Mounting Location of Accelerometers | |
| 10 | | | |
| 11 | | FLAT SURFACE REQUIRED (6.10.2.11) | |
| 12 | | Number of Accelerometers | |
| 13 | | Mounting Location of Accelerometers | |
| 14 | | | |
| 15 | | VIBRATION PROBES (7.4.2.2) | |
| 16 | | PROVISIONS FOR VIB. PROBES | YES |
| 17 | | NUMBER PER RADIAL BEARING | |
| 18 | | NUMBER PER AXIAL BEARING | TWO |
| | | | |
| 19 | | MONITORS AND CABLES SUPPLIED BY (7.4.2.4) | |
| 20 | | | |
| 21 | | TEMPERATURE (7.4.2.3) | |
| 22 | | PROVISIONS FOR TEMP PROBES | YES |
| 23 | | RADIAL BEARING TEMP. | YES |
| 24 | | NUMBER PER RADIAL BEARING | |
| 25 | | THRUST BEARING TEMP. | YES |
| 26 | | NUMBER PER THRUST BEARING ACTIVE SIDE | |
| 27 | | NUMBER PER THRUST BEARING INACTIVE SIDE | |
| 28 | | TEMP. GAUGES (WITH THERMOWELLS) (9.1.3.6) | |
| 29 | | PRESSURE GAUGE TYPE | |
| 30 | | **Remarks** | |
| 31 | | **1) Vendor to provide temperature and vibration** | |
| 32 | | **monitoring system for Pumps.** | |
| 33 | | **2) Vendor to provide pump casing temperature RTD.** | |
| 34 | | | |
| 35 | | | |
| 36 | | | |
| 37 | | | |
| 38 | | | |
| 39 | | | |
| 40 | | | |
| 41 | | | |
| 42 | | | |
| 43 | | | |
| 44 | | | |
| 45 | | | |
| 46 | | | |
| 47 | | | |
| 48 | | | |
| 49 | | | |
| 50 | | | |
| 51 | | | |
| 52 | | | |
| 53 | | | |
| 54 | | | |
| 55 | | | |
| 56 | | | |
| 57 | | | |
| 58 | | | |
| 59 | | | |
| 60 | | | |
| 61 | | | |
| 62 | | | |
| 63 | | | |
| 64 | | | |
| 65 | | | |

| SEAL SUPPORT SYSTEM MOUNTING | | Rev |
|---|---|---|
| SEAL SUPPORT SYSTEM MOUNTED ON PUMP BASEPLATE (7.5.1.4) | | |
| IDENTIFY LOCATION ON BASEPLATE | | |
| INTERCONNECTING PIPING BY | Supplier | |

| MECHANICAL SEAL (6.8.1) (Note 20 & 25) | |
|---|---|
| SEE ATTACHED ISO 21049/API 682 DATA SHEET | |
| ADDITIONAL CENTRAL FLUSH PORT (6.8.9) | |
| HEATING JACKET REQ'D. (6.8.11) | |

| HEATING AND COOLING (6.1.17) | | |
|---|---|---|
| COOLING REQ'D | | |
| COOLING WATER PIPING PLAN | | |
| COOLING WATER PIPING | | |
| FITTINGS | | |
| COOLING WATER PIPING MATERIALS | | |
| COOLING WATER REQUIREMENTS: | | |
| BEARING HOUSING | | m³/h |
| HEAT EXCHANGER | | m³/h |
| TOTAL COOLING WATER | | m³/h |
| HEATING MEDIUM | | |
| OTHER | | |
| HEATING PIPING | | |

| PIPING & APPURTENANCES | |
|---|---|
| MANIFOLD PIPING FOR PURCHASER CONNECTION (7.5.1.6) | |
| VENT | YES |
| DRAIN | YES |
| COOLING WATER | N / A |
| TAG ALL ORIFICES (7.5.2.4) | |
| SOCKET WELD CONN ON SEAL GLAND (7.5.2.8) | |

# MECHANICAL DATASHEET FOR MAINLINE PUMPS AT IPS #2

| 1 | Note | SURFACE PREPARATION AND PAINT | | TEST | | Rev |
|---|---|---|---|---|---|---|
| 2 | | MANUFACTURER'S STANDARD | YES | SHOP INSPECTION (8.1.1) | Yes | |
| 3 | | OTHER (SEE BELOW) | YES | PERFORMANCE CURVE | | |
| 4 | | SPECIFICATION NO. 14495-00-PE-SPC-0005 | | & DATA APPROVAL PRIOR TO SHIPMENT. | YES | |
| 5 | | | | TEST WITH SUBSTITUTE SEAL (8.3.3.2.b) | | |
| 6 | | **PUMP:** | | MATERIAL CERTIFICATION REQUIRED CASING | YES | |
| 7 | | PUMP SURFACE PREPARATION | | (6.12.1.8) IMPELLER | YES | |
| 8 | | PRIMER | | SHAFT | YES | |
| 9 | | FINISH COAT | | OTHER | YES | |
| 10 | | | | CASTING REPAIR WELD PROCEDURE APPR REQD | YES | |
| | | **BASEPLATE:** | | (6.12.2.5) (6.12.3.1) | | |
| 11 | | BASEPLATE SURFACE PREPARATION | | INSPECTION REQUIRED FOR CONNECTION WELDS (6.12.3.4.d) | | |
| 12 | | PRIMER: | | (6.12.3.4.e) MAG PARTICLE | YES | |
| 13 | | FINISH COAT | | RADIOGRAPHY | | |
| 14 | | DETAILS OF LIFTING DEVICES | | LIQUID PENETRANT | YES | |
| 15 | | | | ULTRASONIC | YES | |
| 16 | | **SHIPMENT: (8.4.1)** | | INSPECTION REQUIRED FOR CASTINGS | | |
| 17 | | EXPORT BOXING REQUIRED | YES | MAG PARTICLE | YES | |
| 18 | | OUTDOOR STORAGE MORE THAN 6 MONTHS | YES | RADIOGRAPHY | | |
| | | | | LIQUID PENETRANT | YES | |
| 19 | | **SPARE ROTOR ASSEMBLY PACKAGED FOR:** | | ULTRASONIC | YES | |
| 20 | | ROTOR STORAGE ORIENTATION (9.2.8.2) | | HARDNESS TEST REQUIRED (8.2.2.7) | | |
| 21 | | SHIPPING & STORAGE CONTAINER FOR VERT STORAGE (9.2.8.3) | | ADDNL SUBSURFACE EXAMINATION (6.12.1.5) (8.2.1.3) | | |
| 22 | | | | FOR | | |
| 23 | | N2 PURGE (9.2.8.4) | | METHOD | | |
| 24 | | **SPARE PARTS** | | PMI TESTING REQUIRED (8.2.2.8) | | |
| 25 | | START-UP | | COMPONENTS TO BE TESTED | | |
| 26 | | NORMAL MAINTENANCE | | | | |
| 27 | | **WEIGHTS** kg | | RESIDUAL UNBALANCE TEST (J.4.1.2) | | |
| 28 | | ITEM No / PUMP / DRIVER / GEAR / BASE / TOTAL | | NOTIFICATION OF SUCCESSFUL SHOP | | |
| 29 | | | | PERFORMANCE TEST (8.1.1.c) (8.3.3.5) | | |
| 30 | | | | BASEPLATE TEST (7.3.21) | | |
| 31 | | | | HYDROSTATIC | WIT | |
| 32 | | | | HYDROSTATIC TEST OF BOWLS & COLUMN (9.3.13.2) | | |
| 33 | | **OTHER PURCHASER REQUIREMENTS** | | PERFORMANCE TEST | WIT | |
| 34 | | COORDINATION MEETING REQUIRED (10.1.3) | YES | TEST IN COMPLIANCE WITH (8.3.3.2) | | |
| 35 | | MAXIMUM DISCHARGE PRESSURE TO INCLUDE | | TEST DATA POINTS TO (8.3.3.3) | | |
| 36 | | MAX RELATIVE DENSITY | YES | TEST TOLERANCES TO (8.3.3.4) | | |
| 37 | | OPERATION TO TRIP SPEED | | NPSH (8.3.4.3.1) (8.3.4.3.4) | WIT | |
| 38 | | MAX DIA. IMPELLERS AND/OR NO OF STAGES | | NPSH-1ST STG ONLY (8.3.4.3.2) | | |
| 39 | | CONNECTION DESIGN APPROVAL (9.2.1.4) | | NPSH TESTING TO HI 1.6 OR ISO 9906 (8.3.4.3.3) | | |
| 40 | | TORSIONAL ANALYSIS / REPORT (6.9.2.10) | YES | TEST NPSHA LIMITED TO 110% SITE NPSHA (8.3.3.6) | | |
| 41 | | PROGRESS REPORTS | YES | RETEST ON SEAL LEAKAGE (8.3.3.2.d) | | |
| 42 | | OUTLINE OF PROC FOR OPTIONAL TESTS (10.2.5) | | RETEST REQUIRED AFTER FINAL HEAD ADJ (8.3.3.7.b) | | |
| 43 | | ADDITIONNAL DATA REQUIRING 20 YEARS RETENTION (8.2.1.1) | | COMPLETE UNIT TEST (8.3.4.4.1) | WIT | |
| 44 | | | | SOUND LEVEL TEST (8.3.4.5) | WIT | |
| 45 | | LATERAL ANALYSIS REQUIRED (9.1.3.4) (9.2.4.1.3) | YES | CLEANLINESS PRIOR TO FINAL ASSEMBLY (8.2.2.6) | | |
| 46 | | MODAL ANALYSIS REQUIRED (9.3.9.2) | | LOCATION OF CLEANLINESS INSPECTION | | |
| 47 | | DYNAMIC BALANCE ROTOR (6.9.4.4) | YES | NOZZLE LOAD TEST | | |
| 48 | | INSTALLATION LIST IN PROPOSAL (10.2.3.l) | YES | CHECK FOR CO-PLANAR MOUNTING PAD SURFACES | | |
| 49 | | VFD STEADY STATE DAMPED RESPONSE ANALYSIS (6.9.2.3) | | MECHANICAL RUN TEST UNTIL OIL TEMP STABLE | | |
| 50 | | | | 4 HR. MECH RUN AFTER OIL TEMP STABLE (8.3.4.2.1) | | |
| 51 | | TRANSIENT TORSIONAL RESPONSE (6.9.2.4) | | 4 HR. MECH RUN TEST (8.3.4.2.2) | WIT | |
| 52 | | BEARING LIFE CALCULATIONS REQUIRED (6.10.1.6) | | 2 HR AT MINIMUM CONTINUOUS FLOW | WIT | |
| | | IGNITION HAZARD ASSMT TO EN 13463-1 (7.2.13.e) | | BRG HSG RESONANCE TEST (8.3.4.7) | | |
| 53 | | CASING RETIREMENT THICKNESS DRAWING (10.3.2.3) | | STRUCTURAL RESONANCE TEST (9.3.9.2) | | |
| 54 | | FLANGES RQD IN PLACE OF SKT WELD UNIONS (7.5.2.8) | | REMOVE / INSPECT HYDRODYNAMIC BEARINGS AFTER TEST | | |
| 55 | | INCLUDE PLOTTED VIBRATION SPECTRA (6.9.3.3) | | (9.2.7.5) | | |
| 56 | | CONNECTION BOLTING (7.5.1.7) | | AUXILIARY EQUIPMENT TEST (8.3.4.6) | | |
| 57 | | CADMIUM PLATED BOLTS PROHIBITED | | EQUIPMENT TO BE INCLUDED IN AUXILLIARY TESTS | | |
| 58 | | VENDOR TO KEEP REPAIR AND HT RCDS (8.2.1.1.c) | YES | | | |
| 59 | | VENDOR SUBMIT TEST PROCEDURES (8.3.1.1) | YES | LOCATION OF AUXILIARY EQUIPENT TEST | | |
| 60 | | SUBMIT INSPECTION CHECK LIST (8.1.5) | | | | |
| 61 | | | | IMPACT TEST (6.12.4.3) PER EN 13445 | | |
| 62 | | | | PER ASME SECTION VIII | | |
| | | | | REMOVE CASING AFTER TEST | | |

## NOTES

| Note | | Rev |
|---|---|---|
| 1 | All data in blank fields in this data sheet to be furnished / confirmed by Supplier. | |
| 2 | Pumps shall be able to handle particles below 400 microns. Pump offered by the vendor shall be suitable for a fluid with particle size that may pass through a 40 mesh and 20 mesh during commissioning. | |
| 3 | Rated conditions will be based on operating conditions (temperature 25 deg C) and HSD fluid properties. | |
| 4 | Vendor to note that there is no utility available in the plant. Hence any cooling requirement shall be met by ambient air cooling. | |
| 5 | *Variable Frequency Drive (VFD) shall be provided for capacity control of pumps.*<br>*Pump rated speed is the speed at which rated pump condition is achieved.*<br>*VFD & Motor shall be selected for 110% of pump rated speed.*<br>*Vendor shall provide necessary documentation justifying motor selection along with bid.*<br>*Along with Bid; Vendor to provide pump performance curve for 110% of rated speed.*<br>*Vendor to indicate maximum flow achievable at 110% of pump rated speed & at 100 % rated head. (This point shall be preferably within the region of 80% to 110% of best efficiency flowrate of pump.*<br>*Pump and Pump sub-systems like Mechanical seal, Lube oil system etc. shall be selected to run at 110% of pump rated speed.* | C |
| 6 | Centrifugal type pump shall conform to the requirement of API-610. Selection, operation and maintenance of pump shall be as per OISD-STD-119, 141. | |
| 7 | The products that shall be pumped and their corresponding properties are as follows: | |

| Product | Sp. Gravity at $15^0$ C | Viscosity at $38^0$ C | Viscosity at $20^0$ C | Vapour Pressure at $38^0$ C |
|---|---|---|---|---|
| | - | Cst | Cst | $kg/cm^2a$ |
| -HSD | 0.821 – 0.845 | 2.15 @ 40 ° C | 4.5 | 0.1 |
| - MS | 0.729-0.773 | 0.51 | 0.7 | 0.6 |
| - SKO | 0.790 -0.830 | 1.18 | 1.53 | 0.3 |
| - NAPTHA | 0.6965 | 0.45 | 0.7 | 0.7 |
| - ATF | 0.8105 | 1.18 | 1.53 | 0.3 |

| Note | | Rev |
|---|---|---|
| 8 | Automatic Minimum Recirculation Valve for each pump shall be provided. Valve shall be selected for pump minimum continuous stable flow. | |
| 9 | The pump performance curves shall be furnished at 200 rpm increments between the minimum and maximum speeds. | |
| 10 | Motor to be designed at end of the curve operation considering VFD operation. | |
| 11 | Shut off pressure of pump should not exceed 84 kg/cm2g (for maximum suction pressure of 8.6 kg/cm2g) | |
| 12 | Companion flanges, gaskets, nuts & bolts for Pump suction / discharge, ARV, Vent, drain & any other purchaser's interface nozzles alongwith spares specified in requisition are in vendor's scope. | |
| 13 | All pump safety requirements, instrumentation,sensors,alarms,trips, etc shall be provided by pump vendor. | |
| 14 | No negative tolerance on flow and head is acceptable. | |
| 15 | Vapour Pressure as conservative approach of 0.7 kg/cm2a of Naptha is considered. | |
| 16 | Pump Shall be provided with Vibration Monitoring System (VMS) | |
| 17 | Difference between NPSHA and NPSHR shall be minimum 1.0 m at throughout the range from minimum continuous stable flow up to end of curve. Refer requisition for NPSH test requirement. | |
| 18 | Vendor to note that, during commissioning, water with specific gravity 1 shall be used as a pumping fluid. Vendor to provide flowrate of water. | |
| 19 | *Deleted* | D |
| 20 | Pumps shall be provided with double mechanical seal. Seal Plan 31, 52 & 65 are required as a minimum. However, Vendor to confirm it with seal supplier. Mechanical seal shall withstand the maximum discharge pressure and the maximum allowable temperature. The pump Vendor shall advise in his Bid of the maximum dynamic and static sealing pressure and temperature. Vendor to submit Seal supplier's recommendation along with bid. | |
| 21 | Pump vendor to provide Position sensors for Pump vent & drain valves. | |
| 22 | 600# rating flange shall be WN RF type and 900# rating flange shall be WN RTJ type | |
| 23 | Pumps shall have a head rise from the rated point to shut-off not less than 10% and not greater than 15%. | |
| 24 | Vendor to provide performance curve for two pumps operating in parallel in addition to single pump operation for all speeds. | |
| 25 | During start-up when upstream and downstream stations are pumping at turn down rate and this pump kicks-in, the suction pressure could be 30-35 kg/cm2g. However, this pressure will be lowered to rated suction pressure value as pump comes online. On shutdown of this pump, pump may experience same pressure (i.e. 30-35 kg/cm2g). Maximum discharge pressure shall be calculated considering this case. Pump mechanical seal shall be suitable for this pressure. | |
| 26 | Casing Material shall be Killed Carbon Steel (KCS), other parts materials shall be as per material class S-6. | |

**CLIENT:** HPCL

**PROJECT TITLE:** CAPACITY AUGUMENTATION OF VISAKHA-VIJAYWADA-SECUNDERABAD PIPELINE (VVSPL) PROJECT

**JOB NUMBER:** 403102-14495

**EQUIPMENT NUMBER:** 45-PA-CF-101A/B

**EQUIPMENT SERVICE:** MS, SKO, ATF, HSD, Naphtha

**SERIAL NUMBER:**

**REQ / SPEC NO. :** 14495-00-ME-REQ-0001

**PURCH ORDER NO.**

Cells coloured thus contain drop-down options

contain calculated values based on input data do not change.

identifies a cross referenced paraghaph in the document
note may also contain a drop down list

**COMMENTS:**

| | DATA SHEETS | | | | | |
|---|---|---|---|---|---|---|
| | ITEM No. | ATT | ITEM No. | ATT | ITEM No. | ATT |
| PUMP | | | | | | |
| MOTOR | | | | | | |
| GEAR | | | | | | |
| TURBINE | | | | | | |

APPLICABLE OVERLAY STANDARDS

| Rev | Date | Description | By | Checked | Approved | | | |
|---|---|---|---|---|---|---|---|---|
| | | | | | S.R. Halke | | | |
| D | 28.Feb.2017 | RE-ISSUED FOR INFORMATION | KAMY | RANS | HALS | | | |
| C | 23.Feb.2017 | RE-ISSUED FOR INFORMATION | KAMY | RANS | HALS | | | |
| B | 13.Feb.2017 | ISSUED FOR INFORMATION | KAMY | RANS | HALS | | | |
| A | 27.Jan.2017 | ISSUED FOR INTER DISCIPLINE CHECK | KAMY | HALS | HALS | | | |

**MECHANICAL DATASHEET FOR MAINLINE PUMPS AT IPS #3**

DATA SHEET No.

**14495-45-ME-DAS-0001**

# MECHANICAL DATASHEET FOR MAINLINE PUMPS AT IPS #3

| | | | | | |
|---|---|---|---|---|---|
| 1 | Note | APPLICABLE TO: | PROPOSAL | APPLICABLE NTL/INTNTL STANDARD: | API-610 |
| 2 | | FOR | VVSPL Capacity Aumentation Project | UNIT | Intermediate Pumping Station -3 (Existing IPS-3) |
| 3 | | SITE | IPS 3 (SV-17 Station) (Bogaram Booster station) | SERVICE | IPS-3 Mainline Pumps |
| 4 | | NO. REQ | 2 (1W + 1S) | PUMP SIZE | TYPE / No. STAGES: * |
| 5 | | MANUFACTURER | * | MODEL | * / SERIAL NO. |

**LIQUID CHARACTERISTICS**

| | Units | Maximum | Minimum |
|---|---|---|---|
| LIQUID TYPE OR NAME : | | HSD ( Note 3,6) | |
| VAPOR PRESSURE : | kg/cm2a | 0.7 (Note 15) | |
| RELATIVE DENSITY : | | 0.835 | |
| SPECIFIC HEAT : | kcal/(kg-K) | | |
| VISCOSITY : | cP | Note 7 | |

**OPERATING CONDITIONS (6.1.2)**

| | Units | Maximum | Rated (Note 16) | Normal | Minimum |
|---|---|---|---|---|---|
| NPSHa Datum: | | C.L. Impeller | | | |
| PUMPING TEMPERATURE : | ° C | 50.0 | 25.0 | | 15 |
| FLOW : | m3/hr | | 820.0 | | Note-8 |
| DISCHARGE PRESSURE : (6.3.2) | kg/cm2g | | 64 | | |
| SUCTION PRESSURE : | kg/cm2g | 9.2 (Max) (Note 26) | 6.22 | | |
| DIFFERENTIAL PRESSURE : | kg/cm2 | | 58.08 | | |
| DIFFERENTIAL HEAD : | m | | 695.0 | | |
| $NPSH_A$ : | m | | 76 | Note 19 | |
| HYDRAULIC POWER : | kW | | - | | |

| | |
|---|---|
| SERVICE : | CONTINUOUS |
| PUMPS OPERATE IN: | PARALLEL |
| CORROSION DUE TO : (6.12.1.9) | NIL |
| EROSION DUE TO : (6.12.1.9) | NIL |
| H2S CONCENTRATION (ppm) : (6.12.1.12) | Nil |
| CHLORIDE CONCENTRATION (ppm) : | Nil |
| PARTICULATE SIZE (DIA IN MICRONS) | Note 2 |
| PARTICULATE CONCENTRATION (PPM) | - |
| CORROSIVE | YES |
| EROSIVE | NO |
| FLAMMABLE | YES |
| TOXIC | NO |

C

**SITE AND UTILITY DATA**

**LOCATION:** INDOOR / UNHEATED / UNDER ROOF

**MOUNTED AT :** GRADE ❍ TROPICALISATION REQD

**ELECTRIC AREA CLASSIFICATION:** 6.1.22 ZONE 2

GROUP Group IIA | Group IIB TEMP CLASS T3

**SITE DATA :**

**ELEVATION (MSL) :** 311 m **BAROMETER :** ____ mmHg

RANGE OF AMBIENT TEMPS:MIN / MAX 10 / 46 °C

RELATIVE HUMIDITY: MIN / MAX ____ / ____ %

**UNUSUAL CONDITIONS:**

**UTILITY CONDITIONS :**

| **ELECTRICITY :** | DRIVERS | HEATING | CONTROL | SHUTDOWN |
|---|---|---|---|---|
| VOLTAGE | 6600 | 240 | | |
| PHASE | 3 | 1 | | |
| HERTZ | 50 | 50 | | |

**COOLING WATER :** (Not available) Note 4

| | INLET | RETURN | DESIGN |
|---|---|---|---|
| TEMP °C | | MAX | |
| PRESS. kg/cm²g | | MIN | |

SOURCE

COOLING WATER CHLORIDE CONCENTRATION: ____ ppm

**INSTRUMENT AIR :** MAX ____ kg/cm²g MIN ____ kg/cm²g

**STEAM**

| | | DRIVERS | HEATING |
|---|---|---|---|
| TEMP °C | Max | | |
| | Min | | |
| PRESS. kg/cm²g | Max | | |
| | Min | | |

**PERFORMANCE (Note 9, 11, 24 & 25)**

| | | | |
|---|---|---|---|
| PROPOSAL CURVE NO. | RPM | | |
| As Tested Curve No. | | | |
| IMPELLER DIA.: RATED | MAX. | MIN. | mm |
| RATED POWER | kW | EFFICIENCY | (%) |
| RATED CURVE BEP FLOW (at rated impeller dia) | | | m³/h |
| MIN FLOW : THERMAL | m³/h | STABLE | m³/h |
| PREFERRED OPERATING REGION (6.1.11) | | to | m³/h |
| ALLOWABLE OPERATING REGION | | to | m³/h |
| MAX HEAD @ RATED IMPELLER | | | m |
| MAX POWER @ RATED IMPELLER | (6.8.9) | | kW |
| NPSH3 AT RATED FLOW : | | | m |
| CL PUMP TO U/S BASEPLATE | | | m |
| NPSH MARGIN AT RATED FLOW : | | | m |
| SPECIFIC SPEED (6.1.9) | | m3/h, rpm, m | |
| SUCTION SPECIFIC SPEED LIMIT | | | |
| SUCTION SPECIFIC SPEED | | m3/h, rpm, m | |
| MAX. ALLOW. SOUND PRESS. LEVEL REQD (6.1.14) | | | 85 (dBA) |
| EST MAX SOUND PRESS. LEVEL | | | (dBA) |
| MAX. SOUND POWER LEVEL REQ'D (6.1.14) | | | |
| EST MAX SOUND POWER LEVEL | | | |

**DRIVER (7.1.5) (Note 5 & 10)**

| | |
|---|---|
| Driver Type | MOTOR |
| GEAR | |
| VARIABLE SPEED REQUIRED | YES |
| SOURCE OF VARIABLE SPEED | Motor |
| OTHER | VFD |
| MANUFACTURER | |
| NAMEPLATE POWER | kW |
| Nominal RPM | |
| RATED LOAD RPM | |
| FRAME OR MODEL | |
| ORIENTATION | HORIZONTAL |
| LUBE | |
| BEARING TYPE: | |
| RADIAL | / |
| THRUST | / |
| STARTING METHOD | Open Valve (Fully-Loaded) |
| SEE DRIVER DATA SHEET | |

# MECHANICAL DATASHEET FOR MAINLINE PUMPS AT IPS #3

| 1 | Note | CONSTRUCTION | Rev |
|---|---|---|---|
| 2 | | **API PUMP TYPE:** *BB3* **[Based on API 610 definitions]** | D |
| 3 | | | |
| 4 | | **NOZZLE CONNECTIONS:** (6.5.5) **(Note 12 & 23)** | |

| | Size | Facing | Rating | Position |
|---|---|---|---|---|
| SUCTION | | | | *SIDE* |
| DISCHARGE | | | | *SIDE* |

**PRESSURE CASING AUX. CONNECTIONS: (6.4.3.2)**

| | No. | Size | Type | Facing | Rating | Posn. |
|---|---|---|---|---|---|---|
| BALANCE/LEAK OF | | | | | | |
| DRAIN | | | | | | |
| VENT | | | | | | |
| PRESSURE GAGE | | | | | | |
| TEMP GAGE | | | | | | |
| WARM-UP LINE | | | | | | |

| | |
|---|---|
| Drain Valve Supplied By | SUPPLIER |
| DRAINS MANIFOLDED | YES |
| VENT Valve Supplied By | SUPPLIER |
| VENTS MANIFOLDED | YES |
| THREADED CONS FOR PIPELINE SERVICE & < 50°C (6.4.3.2) | |
| SPECIAL FITTINGS FOR TRANSITIONING (6.4.3.3) | |
| CYLINDRICAL THREADS REQUIRED (6.4.3.8) | |
| GUSSET SUPPORT REQUIRED | |
| MACHINED AND STUDDED CONNECTIONS (6.4.3.12) | |
| VS 6 DRAIN | N/A |
| DRAIN TO SKID EDGE | YES |

**MATERIAL (6.12.1.1)**

| | |
|---|---|
| APPENDIX H CLASS | S-6 (Note 27) |
| MIN DESIGN METAL TEMP (6.12.4.1) | °C |
| REDUCED-HARDNESS MATERIALS REQ'D (6.12.1.12.1) | |
| Applicable Hardness Standard (6.12.1.12.3) | |
| BARREL : | |
| CASE : | Killed Carbon Steel (KCS) |
| DIFFUSERS | |
| IMPELLER : | |
| IMPELLER WEAR RING : | |
| CASE WEAR RING : | |
| SHAFT: | |
| Bowl (if VS-type) | |
| Inspection Class | |

**BEARINGS AND LUBRICATION (6.10.1.1)**

BEARING (TYPE / NUMBER): (6.11.4)

RADIAL / 

THRUST / 

REVIEW AND APPROVE THRUST BEARING SIZE : (9.2.5.2.4)

LUBRICATION : (6.10.2.2) (6.11.3) (9.6.1)

PRESSURE LUBE SYSTEM TO ISO 10438- (9.2.6.5)

ISO 10438 DATA SHEETS ATTACHED

Pressurized Lube Oil System mtd on pump baseplate

Location of Pressurized Lube Oil System mounted on baseplate :

INTERCONNECTING PIPING PROVIDED BY

OIL VISC. ISO GRADE VG

CONSTANT LEVEL OILER :

| | |
|---|---|
| **CASING MOUNTING:** | CENTERLINE |
| **CASING TYPE:** (6.3.10) | |
| OH3 BACKPULLOUT LIFTING DEVICE REQD. (9.1.2.6) | |

**CASE PRESSURE RATING:**

MAWP : (6.3.6) kg/cm²g @ °C D

HYDROTEST : kg/cm²g @ °C D

| | |
|---|---|
| **HYDROTEST OH PUMP AS ASSEMBLY** | |
| SUCT'N PRESS. REGIONS DESIGNED FOR MAWP | YES |
| **ROTATION:** (VIEWED FROM COUPLING END) | |
| • IMPELLERS INDIVIDUALLY SECURED : | |
| • BOLT OH 3/4/5 PUMP TO PAD / FOUNDATION : | |
| • PROVIDE SOLEPLATE FOR OH 3/4/5 PUMPS | |
| **ROTOR:** | |
| SHAFT FLEXIBILITY INDEX (SFI) (9.1.1.3) | |
| First Critical Speed Wet (Multi stage pumps only) | |
| COMPONENT BALANCE TO ISO 1940 G1.0 | |
| SHRINK FIT -LIMITED MOVEMENT IMPELLERS (9.2.2.3) | |

**COUPLING:(7.2.3) (7.2.13.f)**

| | |
|---|---|
| MANUFACTURER | |
| MODEL | |
| RATING (POWER/100 RPM) | |
| SPACER LENGTH | mm |
| SERVICE FACTOR | |
| RIGID | |
| COUPLING WITH HYDRAULIC FIT (7.2.10) | |
| COUPLING BALANCED TO ISO 1940-1 G6.3 (7.2.3) | |
| COUPLING WITH PROPRIETARY CLAMPING DEVICE (7.2.11) | |
| COUPLING IN COMPLIANCE WITH (7.2.4) | |
| COUPLING GUARD STANDARD PER (7.2.13.a) | |
| Window on Coupling Guard | |

**BASEPLATE**

| | |
|---|---|
| API BASEPLATE NUMBER : | |
| BASEPLATE CONSTRUCTION (7.3.14) | |
| BASEPLATE DRAINAGE (7.3.1) | |
| MOUNTING : | |
| NON-GROUT CONSTRUCTION : (7.3.13) | |
| VERTICAL LEVELING SCREWS : | |
| LONGITUDINAL DRIVER POSITIONING SCREWS : | |
| SUPPLIED WITH : ● GROUT AND VENT HOLES | |
| ● DRAIN CONNECTION | |
| MOUNTING PADS SIZED FOR BASEPLATE LEVELING (7.3.5) | |
| MOUNTING PADS TO BE MACHINED (7.3.6) | |
| PROVIDE SPACER PLATE UNDER ALL EQUIPMENT FEET | |
| OTHER | |

**REMARKS :**

# MECHANICAL DATASHEET FOR MAINLINE PUMPS AT IPS #3

| 1 | Note | INSTRUMENTATION (Note-13 & 18) | |
|---|---|---|---|
| 2 | | SEE ATTACHED API-670 DATA SHEET | |
| 3 | | ACCELEROMETER (7.4.2.1) | |
| 4 | | Number of Accelerometers | |
| 5 | | Mounting Location of Accelerometers | |
| 6 | | | |
| 7 | | PROVISION FOR MTG ONLY (6.10.2.10) | |
| 8 | | Number of Accelerometers | |
| 9 | | Mounting Location of Accelerometers | |
| 10 | | | |
| 11 | | FLAT SURFACE REQUIRED (6.10.2.11) | |
| 12 | | Number of Accelerometers | |
| 13 | | Mounting Location of Accelerometers | |
| 14 | | | |
| 15 | | VIBRATION PROBES (7.4.2.2) | |
| 16 | | PROVISIONS FOR VIB. PROBES | YES |
| 17 | | NUMBER PER RADIAL BEARING | |
| 18 | | NUMBER PER AXIAL BEARING | TWO |
| | | | |
| 19 | | MONITORS AND CABLES SUPPLIED BY (7.4.2.4) | |
| 20 | | | |
| 21 | | TEMPERATURE (7.4.2.3) | |
| 22 | | PROVISIONS FOR TEMP PROBES | YES |
| 23 | | RADIAL BEARING TEMP. | YES |
| 24 | | NUMBER PER RADIAL BEARING | |
| 25 | | THRUST BEARING TEMP. | YES |
| 26 | | NUMBER PER THRUST BEARING ACTIVE SIDE | |
| 27 | | NUMBER PER THRUST BEARING INACTIVE SIDE | |
| 28 | | TEMP. GAUGES (WITH THERMOWELLS) (9.1.3.6) | |
| 29 | | PRESSURE GAUGE TYPE | |
| 30 | | **Remarks** | |
| 31 | | **1) Vendor to provide temperature and vibration** | |
| 32 | | **monitoring system for Pumps.** | |
| 33 | | **2) Vendor to provide pump casing temperature RTD.** | |
| 34 | | | |
| 35 | | | |
| 36 | | | |
| 37 | | | |
| 38 | | | |
| 39 | | | |
| 40 | | | |
| 41 | | | |
| 42 | | | |
| 43 | | | |
| 44 | | | |
| 45 | | | |
| 46 | | | |
| 47 | | | |
| 48 | | | |
| 49 | | | |
| 50 | | | |
| 51 | | | |
| 52 | | | |
| 53 | | | |
| 54 | | | |
| 55 | | | |
| 56 | | | |
| 57 | | | |
| 58 | | | |
| 59 | | | |
| 60 | | | |
| 61 | | | |
| 62 | | | |
| 63 | | | |
| 64 | | | |
| 65 | | | |

| SEAL SUPPORT SYSTEM MOUNTING | | Rev |
|---|---|---|
| SEAL SUPPORT SYSTEM MOUNTED ON PUMP BASEPLATE (7.5.1.4) | | |
| IDENTIFY LOCATION ON BASEPLATE | | |
| INTERCONNECTING PIPING BY | Supplier | |

| MECHANICAL SEAL (6.8.1) (Note 21 & 26) | | |
|---|---|---|
| SEE ATTACHED ISO 21049/API 682 DATA SHEET | | |
| ADDITIONAL CENTRAL FLUSH PORT (6.8.9) | | |
| HEATING JACKET REQ'D. (6.8.11) | | |

| HEATING AND COOLING (6.1.17) | | |
|---|---|---|
| COOLING REQ'D | | |
| COOLING WATER PIPING PLAN | | |
| COOLING WATER PIPING | | |
| FITTINGS | | |
| COOLING WATER PIPING MATERIALS | | |
| COOLING WATER REQUIREMENTS: | | |
| BEARING HOUSING | | $m^3/h$ |
| HEAT EXCHANGER | | $m^3/h$ |
| TOTAL COOLING WATER | | $m^3/h$ |
| HEATING MEDIUM | | |
| OTHER | | |
| HEATING PIPING | | |

| PIPING & APPURTENANCES | |
|---|---|
| MANIFOLD PIPING FOR PURCHASER CONNECTION (7.5.1.6) | |
| VENT | YES |
| DRAIN | YES |
| COOLING WATER | N / A |
| TAG ALL ORIFICES (7.5.2.4) | |
| SOCKET WELD CONN ON SEAL GLAND (7.5.2.8) | |

# MECHANICAL DATASHEET FOR MAINLINE PUMPS AT IPS #3

| 1 | Note | SURFACE PREPARATION AND PAINT | | TEST | | Rev |
|---|---|---|---|---|---|---|
| 2 | | MANUFACTURER'S STANDARD | YES | SHOP INSPECTION (8.1.1) | Yes | |
| 3 | | OTHER (SEE BELOW) | YES | PERFORMANCE CURVE | | |
| 4 | | SPECIFICATION NO. 14495-00-PE-SPC-0005 | | & DATA APPROVAL PRIOR TO SHIPMENT. | YES | |
| 5 | | | | TEST WITH SUBSTITUTE SEAL (8.3.3.2.b) | | |
| 6 | | **PUMP:** | | MATERIAL CERTIFICATION REQUIRED CASING | YES | |
| 7 | | PUMP SURFACE PREPARATION | | (6.12.1.8) IMPELLER | YES | |
| 8 | | PRIMER | | SHAFT | YES | |
| 9 | | FINISH COAT | | OTHER | YES | |
| 10 | | | | CASTING REPAIR WELD PROCEDURE APPR REQD | YES | |
| | | **BASEPLATE:** | | (6.12.2.5) (6.12.3.1) | | |
| 11 | | BASEPLATE SURFACE PREPARATION | | INSPECTION REQUIRED FOR CONNECTION WELDS (6.12.3.4.d) | | |
| 12 | | PRIMER: | | (6.12.3.4.e) MAG PARTICLE | YES | |
| 13 | | FINISH COAT | | RADIOGRAPHY | | |
| 14 | | DETAILS OF LIFTING DEVICES | | LIQUID PENETRANT | YES | |
| 15 | | | | ULTRASONIC | YES | |
| 16 | | **SHIPMENT: (8.4.1)** | | INSPECTION REQUIRED FOR CASTINGS | | |
| 17 | | EXPORT BOXING REQUIRED | YES | MAG PARTICLE | YES | |
| 18 | | OUTDOOR STORAGE MORE THAN 6 MONTHS | YES | RADIOGRAPHY | | |
| | | | | LIQUID PENETRANT | YES | |
| 19 | | **SPARE ROTOR ASSEMBLY PACKAGED FOR:** | | ULTRASONIC | YES | |
| 20 | | ROTOR STORAGE ORIENTATION (9.2.8.2) | | HARDNESS TEST REQUIRED (8.2.2.7) | | |
| 21 | | SHIPPING & STORAGE CONTAINER FOR VERT STORAGE (9.2.8.3) | | ADDNL SUBSURFACE EXAMINATION (6.12.1.5) (8.2.1.3) | | |
| 22 | | | | FOR | | |
| 23 | | N2 PURGE (9.2.8.4) | | METHOD | | |
| 24 | | **SPARE PARTS** | | PMI TESTING REQUIRED (8.2.2.8) | | |
| 25 | | START-UP | | COMPONENTS TO BE TESTED | | |
| 26 | | NORMAL MAINTENANCE | | | | |
| 27 | | **WEIGHTS** kg | | RESIDUAL UNBALANCE TEST (J.4.1.2) | | |
| 28 | | ITEM No / PUMP / DRIVER / GEAR / BASE / TOTAL | | NOTIFICATION OF SUCCESSFUL SHOP | | |
| 29 | | | | PERFORMANCE TEST (8.1.1.c) (8.3.3.5) | | |
| 30 | | | | BASEPLATE TEST (7.3.21) | | |
| 31 | | | | HYDROSTATIC | WIT | |
| 32 | | | | HYDROSTATIC TEST OF BOWLS & COLUMN (9.3.13.2) | | |
| 33 | | **OTHER PURCHASER REQUIREMENTS** | | PERFORMANCE TEST | WIT | |
| 34 | | COORDINATION MEETING REQUIRED (10.1.3) | YES | TEST IN COMPLIANCE WITH (8.3.3.2) | | |
| 35 | | MAXIMUM DISCHARGE PRESSURE TO INCLUDE | | TEST DATA POINTS TO (8.3.3.3) | | |
| 36 | | MAX RELATIVE DENSITY | YES | TEST TOLERANCES TO (8.3.3.4) | | |
| 37 | | OPERATION TO TRIP SPEED | | NPSH (8.3.4.3.1) (8.3.4.3.4) | WIT | |
| 38 | | MAX DIA. IMPELLERS AND/OR NO OF STAGES | | NPSH-1ST STG ONLY (8.3.4.3.2) | | |
| 39 | | CONNECTION DESIGN APPROVAL (9.2.1.4) | | NPSH TESTING TO HI 1.6 OR ISO 9906 (8.3.4.3.3) | | |
| 40 | | TORSIONAL ANALYSIS / REPORT (6.9.2.10) | YES | TEST NPSHA LIMITED TO 110% SITE NPSHA (8.3.3.6) | | |
| 41 | | PROGRESS REPORTS | YES | RETEST ON SEAL LEAKAGE (8.3.3.2.d) | | |
| 42 | | OUTLINE OF PROC FOR OPTIONAL TESTS (10.2.5) | | RETEST REQUIRED AFTER FINAL HEAD ADJ (8.3.3.7.b) | | |
| 43 | | ADDITIONNAL DATA REQUIRING 20 YEARS RETENTION (8.2.1.1) | | COMPLETE UNIT TEST (8.3.4.4.1) | WIT | |
| 44 | | | | SOUND LEVEL TEST (8.3.4.5) | WIT | |
| 45 | | LATERAL ANALYSIS REQUIRED (9.1.3.4) (9.2.4.1.3) | YES | CLEANLINESS PRIOR TO FINAL ASSEMBLY (8.2.2.6) | | |
| 46 | | MODAL ANALYSIS REQUIRED (9.3.9.2) | | LOCATION OF CLEANLINESS INSPECTION | | |
| 47 | | DYNAMIC BALANCE ROTOR (6.9.4.4) | YES | NOZZLE LOAD TEST | | |
| 48 | | INSTALLATION LIST IN PROPOSAL (10.2.3.l) | YES | CHECK FOR CO-PLANAR MOUNTING PAD SURFACES | | |
| 49 | | VFD STEADY STATE DAMPED RESPONSE ANALYSIS (6.9.2.3) | | MECHANICAL RUN TEST UNTIL OIL TEMP STABLE | | |
| 50 | | | | 4 HR. MECH RUN AFTER OIL TEMP STABLE (8.3.4.2.1) | | |
| 51 | | TRANSIENT TORSIONAL RESPONSE (6.9.2.4) | | 4 HR. MECH RUN TEST (8.3.4.2.2) | WIT | |
| 52 | | BEARING LIFE CALCULATIONS REQUIRED (6.10.1.6) | | 2 HR AT MINIMUM CONTINUOUS FLOW | WIT | |
| | | IGNITION HAZARD ASSMT TO EN 13463-1 (7.2.13.e) | | BRG HSG RESONANCE TEST (8.3.4.7) | | |
| 53 | | CASING RETIREMENT THICKNESS DRAWING (10.3.2.3) | | STRUCTURAL RESONANCE TEST (9.3.9.2) | | |
| 54 | | FLANGES RQD IN PLACE OF SKT WELD UNIONS (7.5.2.8) | | REMOVE / INSPECT HYDRODYNAMIC BEARINGS AFTER TEST | | |
| 55 | | INCLUDE PLOTTED VIBRATION SPECTRA (6.9.3.3) | | (9.2.7.5) | | |
| 56 | | CONNECTION BOLTING (7.5.1.7) | | AUXILIARY EQUIPMENT TEST (8.3.4.6) | | |
| 57 | | CADMIUM PLATED BOLTS PROHIBITED | | EQUIPMENT TO BE INCLUDED IN AUXILLIARY TESTS | | |
| 58 | | VENDOR TO KEEP REPAIR AND HT RCDS (8.2.1.1.c) | YES | | | |
| 59 | | VENDOR SUBMIT TEST PROCEDURES (8.3.1.1) | YES | LOCATION OF AUXILIARY EQUIPENT TEST | | |
| 60 | | SUBMIT INSPECTION CHECK LIST (8.1.5) | | | | |
| 61 | | | | IMPACT TEST (6.12.4.3) PER EN 13445 | | |
| 62 | | | | PER ASME SECTION VIII | | |
| | | | | REMOVE CASING AFTER TEST | | |

## NOTES

| Note | | Rev |
|---|---|---|
| 1 | All data in blank fields in this data sheet to be furnished / confirmed by Supplier. | |
| 2 | Pumps shall be able to handle particles below 400 microns. Pump offered by the vendor shall be suitable for a fluid with particle size that may pass through a 40 mesh and 20 mesh during commissioning. | |
| 3 | Rated conditions will be based on operating conditions (temperature 25 deg C) and HSD fluid properties. | |
| 4 | Vendor to note that there is no utility available in the plant. Hence any cooling requirement shall be met by ambient air cooling. | |
| 5 | *Variable Frequency Drive (VFD) shall be provided for capacity control of pumps.*<br>*Pump rated speed is the speed at which rated pump condition is achieved.*<br>*VFD & Motor shall be selected for 110% of pump rated speed.*<br>*Vendor shall provide necessary documentation justifying motor selection along with bid.*<br>*Along with Bid; Vendor to provide pump performance curve for 110% of rated speed.*<br>*Vendor to indicate maximum flow achievable at 110% of pump rated speed & at 100 % rated head. (This point shall be preferably within the region of 80% to 110% of best efficiency flowrate of pump.*<br>*Pump and Pump sub-systems like Mechanical seal, Lube oil system etc. shall be selected to run at 110% of pump rated speed.* | C |
| 6 | Centrifugal type pump shall conform to the requirement of API-610. Selection, operation and maintenance of pump shall be as per OISD-STD-119, 141. | |
| 7 | The products that shall be pumped and their corresponding properties are as follows: | |

| Product | Sp. Gravity at $15^0$ C | Viscosity at $38^0$ C | Viscosity at $20^0$ C | Vapour Pressure at $38^0$ C |
|---|---|---|---|---|
| | - | Cst | Cst | $kg/cm^2a$ |
| -HSD | 0.821 – 0.845 | 2.15 @ 40 ° C | 4.5 | 0.1 |
| - MS | 0.729-0.773 | 0.51 | 0.7 | 0.6 |
| - SKO | 0.790 -0.830 | 1.18 | 1.53 | 0.3 |
| - NAPHTHA | 0.6965 | 0.45 | 0.7 | 0.7 |
| - ATF | 0.8105 | 1.18 | 1.53 | 0.3 |

| Note | |
|---|---|
| 8 | Automatic Minimum Recirculation Valve for each pump shall be provided. Valve shall be selected for pump minimum continuous stable flow. |
| 9 | The pump performance curves shall be furnished at 200 rpm increments between the minimum and maximum speeds. |
| 10 | Motor to be designed at end of the curve operation considering VFD operation. |
| 11 | Shut off pressure of pump should not exceed 76 kg/cm2g (for maximum suction pressure of 9.2 kg/cm2g) |
| 12 | Companion flanges, gaskets, nuts & bolts for Pump suction / discharge, ARV, Vent, drain & any other purchaser's interface nozzles alongwith spares specified in requisition are in vendor's scope. |
| 13 | All pump safety requirements, instrumentation,sensors,alarms,trips, etc shall be provided by pump vendor. |
| 14 | No negative tolerance on flow and head is acceptable. |
| 15 | Vapour Pressure as conservative approach of 0.7 kg/cm2a of Naptha is considered. |
| 16 | Considering future capacity augmentation, the pump rated capacity will be 820 m3/hr (each). However, in current scenario, pump will operate at lower capacity of 650 m3/hr. Vendor to match following parameters while selecting pump that can be suited for lower capacity of 650 m3/hr. |

| | Units | Maximum | Capacity | Normal | Minimum |
|---|---|---|---|---|---|
| NPSHa Datum: | | | | | |
| PUMPING TEMPERATURE : | ° c | | **25.0** | | |
| FLOW : | m3/hr | | **650.0** | | |
| DISCHARGE PRESSURE : (6.3.2) | kg/cm2g | | **52.26** | | |
| SUCTION PRESSURE : | kg/cm2g | | **5.62** | | |
| DIFFERENTIAL PRESSURE : | kg/cm2 | | **46.64** | | |
| DIFFERENTIAL HEAD : | m | | **558.4** | | |
| $NPSH_A$ : | m | | **69** | | |
| HYDRAULIC POWER : | KW | | **-** | | |

| Note | | Rev |
|---|---|---|
| 17 | Vendor to note that, during commissioning, water with specific gravity 1 shall be used as a pumping fluid. Vendor to provide flowrate of water. | |
| 18 | Pump Shall be provided with Vibration Monitoring System (VMS) | |
| 19 | Difference between NPSHA and NPSHR shall be minimum 1.0 m at throughout the range from minimum continuous stable flow up to end of curve. Refer requisition for NPSH test requirement. | |
| 20 | *Deleted* | D |
| 21 | Pumps shall be provided with double mechanical seal. Seal Plan 31, 52 & 65 are required as a minimum. However, Vendor to confirm it with seal supplier. Mechanical seal shall withstand the maximum discharge pressure and the maximum allowable temperature. The pump Vendor shall advise in his Bid of the maximum dynamic and static sealing pressure and temperature. Vendor to submit Seal supplier's recommendation along with bid. | |
| 22 | Pump vendor to provide Position sensors for Pump vent & drain valves. | |
| 23 | 600# rating flange shall be WN RF type and 900# rating flange shall be WN RTJ type | |
| 24 | Pumps shall have a head rise from the rated point to shut-off not less than 10% and not greater than 15%. | |
| 25 | Vendor to provide performance curve for two pumps operating in parallel in addition to single pump operation for all speeds. | |
| 26 | During start-up when upstream and downstream stations are pumping at turn down rate and this pump kicks-in, the suction pressure could be 30-35 kg/cm2g. However, this pressure will be lowered to rated suction pressure value as pump comes online. On shutdown of this pump, pump may experience same pressure (i.e. 30-35 kg/cm2g). Maximum discharge pressure shall be calculated considering this case. Pump mechanical seal shall be suitable for this pressure. | |
| 27 | Casing Material shall be Killed Carbon Steel (KCS), other parts materials shall be as per material class S-6. | |

**CLIENT:** HPCL

**PROJECT TITLE:** CAPACITY AUGUMENTATION OF VISAKHA-VIJAYWADA-SECUNDERABAD PIPELINE (VVSPL) PROJECT

**JOB NUMBER:** 403102-14495

**EQUIPMENT NUMBER:** 10-PA-CF-104

**EQUIPMENT SERVICE:** MS, SKO, ATF, HSD, Naphtha

**SERIAL NUMBER:**

**REQ / SPEC NO. :** 14495-00-ME-REQ-0001

**PURCH ORDER NO.**

Cells coloured thus contain drop-down options

contain calculated values based on input data do not change.

identifies a cross referenced paraghaph in the document
note may also contain a drop down list

**COMMENTS:**

| | DATA SHEETS | | | | | |
|---|---|---|---|---|---|---|
| | ITEM No. | ATT | ITEM No. | ATT | ITEM No. | ATT |
| PUMP | | | | | | |
| MOTOR | | | | | | |
| GEAR | | | | | | |
| TURBINE | | | | | | |

APPLICABLE OVERLAY STANDARDS

| Rev | Date | Description | By | Checked | Approved | | | |
|---|---|---|---|---|---|---|---|---|
| | | | | | S.R Halke | | | |
| C | 23.Feb.2017 | RE-ISSUED FOR INFORMATION | KAMY | RANS | HALS | | | |
| B | 13.Feb.2017 | ISSUED FOR INFORMATION | KAMY | RANS | HALS | | | |
| A | 27.Jan.2017 | ISSUED FOR INTER DISCIPLINE CHECK | KAMY | HALS | HALS | | | |

**MECHANICAL DATA SHEET FOR MAINLINE PUMP AT VIZAG**

DATA SHEET No.

**14495-10-ME-DAS-0001**

Sheet 1 of 6

# MECHANICAL DATA SHEET FOR MAINLINE PUMP AT VIZAG

| | | | | | |
|---|---|---|---|---|---|
| APPLICABLE TO: | PROPOSAL | APPLICABLE NTL/INTNTL STANDARD: | API-610 | | Rev |
| FOR | VVSPL Capacity Aumentation Project | UNIT | Vizag Pumping Station | | |
| SITE | Vizag | SERVICE | Vizag New Mainline Pump | | |
| NO. REQ | 1 (1W + 0S) | PUMP SIZE | | TYPE | | No. STAGES | * |
| MANUFACTURER | * | MODEL | * | SERIAL NO. | |

## LIQUID CHARACTERISTICS

| | Units | Maximum | Minimum |
|---|---|---|---|
| LIQUID TYPE OR NAME : | | HSD ( Note 3,6) | |
| VAPOR PRESSURE : | kg/cm2a | 0.7 (Note 15) | |
| RELATIVE DENSITY : | | 0.835 | |
| SPECIFIC HEAT : | kcal/(kg-K) | | |
| VISCOSITY : | cP | Note 7 | |

| | |
|---|---|
| SERVICE : | CONTINUOUS |
| PUMPS OPERATE IN: | PARALLEL |
| CORROSION DUE TO : (6.12.1.9) | NIL |
| EROSION DUE TO : (6.12.1.9) | NIL |
| H2S CONCENTRATION (ppm) : (6.12.1.12) | Nil |
| CHLORIDE CONCENTRATION (ppm) : | Nil |
| PARTICULATE SIZE (DIA IN MICRONS) | Note 2 |
| PARTICULATE CONCENTRATION (PPM) | - |
| CORROSIVE | YES |
| EROSIVE | NO |
| FLAMMABLE | YES |
| TOXIC | NO |

## OPERATING CONDITIONS (6.1.2)

| | Units | Maximum | Rated | Normal | Minimum |
|---|---|---|---|---|---|
| NPSHa Datum: | | | C.L. Impeller | | |
| PUMPING TEMPERATURE : | ° C | 50.0 | 25.0 | | 15 |
| FLOW : | m3/hr | | 580.0 | | Note-8 |
| DISCHARGE PRESSURE : (6.3.2) | kg/cm2g | | 80.0 | | |
| SUCTION PRESSURE : | kg/cm2g | | 1.64 (Note-24) | | |
| DIFFERENTIAL PRESSURE : | kg/cm2 | | 78.56 | | |
| DIFFERENTIAL HEAD : | m | | 941 | | |
| $NPSH_A$ : | m | | 22 | Note 18 | |
| HYDRAULIC POWER : | kW | | - | | |

C

## SITE AND UTILITY DATA

**LOCATION:**

INDOOR | UNHEATED | UNDER ROOF

**MOUNTED AT :** GRADE ❍ TROPICALISATION REQD

**ELECTRIC AREA CLASSIFICATION:** 6.1.22 ZONE 2

GROUP Group IIA | Group IIB TEMP CLASS T3

**SITE DATA :**

**ELEVATION (MSL) :** 2.055 m **BAROMETER :** ____ mmHg

RANGE OF AMBIENT TEMPS:MIN / MAX 18.4 / 41 °C

RELATIVE HUMIDITY: MIN / MAX ____ / ____ %

**UNUSUAL CONDITIONS:**

**UTILITY CONDITIONS :**

| **ELECTRICITY :** | DRIVERS | HEATING | CONTROL | SHUTDOWN |
|---|---|---|---|---|
| VOLTAGE | 6600 | 240 | | |
| PHASE | 3 | 1 | | |
| HERTZ | 50 | 50 | | |

**COOLING WATER :** (Not available) Note 4

| | INLET | RETURN | DESIGN |
|---|---|---|---|
| TEMP °C | | MAX | |
| PRESS. kg/cm²g | | MIN | |

SOURCE

COOLING WATER CHLORIDE CONCENTRATION: ____ ppm

**INSTRUMENT AIR :** MAX ____ kg/cm²g MIN ____ kg/cm²g

**STEAM**

| | | DRIVERS | HEATING |
|---|---|---|---|
| TEMP °C | Max | | |
| | Min | | |
| PRESS. kg/cm²g | Max | | |
| | Min | | |

## PERFORMANCE (Note 9 , 11 & 23)

| | | |
|---|---|---|
| PROPOSAL CURVE NO. | RPM | |
| As Tested Curve No. | | |
| IMPELLER DIA.: RATED | MAX. | MIN. | mm |
| RATED POWER | kW | EFFICIENCY | (%) |
| RATED CURVE BEP FLOW (at rated impeller dia) | | m³/h |
| MIN FLOW : THERMAL | m³/h | STABLE | m³/h |
| PREFERRED OPERATING REGION (6.1.11) | to | m³/h |
| ALLOWABLE OPERATING REGION | to | m³/h |
| MAX HEAD @ RATED IMPELLER | | m |
| MAX POWER @ RATED IMPELLER | (6.8.9) | kW |
| NPSH3 AT RATED FLOW : | | m |
| CL PUMP TO U/S BASEPLATE | | m |
| NPSH MARGIN AT RATED FLOW : | | m |
| SPECIFIC SPEED (6.1.9) | m3/h, rpm, m | |
| SUCTION SPECIFIC SPEED LIMIT | | |
| SUCTION SPECIFIC SPEED | m3/h, rpm, m | |
| MAX. ALLOW. SOUND PRESS. LEVEL REQD (6.1.14) | | 85 | (dBA) |
| EST MAX SOUND PRESS. LEVEL | | (dBA) |
| MAX. SOUND POWER LEVEL REQ'D (6.1.14) | | |
| EST MAX SOUND POWER LEVEL | | |

## DRIVER (7.1.5) (Note 5 & 10)

| | |
|---|---|
| Driver Type | MOTOR |
| GEAR | |
| VARIABLE SPEED REQUIRED | YES |
| SOURCE OF VARIABLE SPEED | Motor |
| OTHER | VFD |
| MANUFACTURER | |
| NAMEPLATE POWER | kW |
| Nominal RPM | |
| RATED LOAD RPM | |
| FRAME OR MODEL | |
| ORIENTATION | HORIZONTAL |
| LUBE | |
| BEARING TYPE: | |
| RADIAL | / |
| THRUST | / |
| STARTING METHOD | Open Valve (Fully-Loaded) |
| SEE DRIVER DATA SHEET | |

# MECHANICAL DATA SHEET FOR MAINLINE PUMP AT VIZAG

| Note | CONSTRUCTION | Rev |
|---|---|---|

**API PUMP TYPE:** *BB3* **[Based on API 610 definitions]**

**NOZZLE CONNECTIONS:** (6.5.5) Note-12 & 22

| | Size | Facing | Rating | Position |
|---|---|---|---|---|
| SUCTION | | | | *SIDE* |
| DISCHARGE | | | | *SIDE* |

**PRESSURE CASING AUX. CONNECTIONS: (6.4.3.2)**

| | No. | Size | Type | Facing | Rating | Posn. |
|---|---|---|---|---|---|---|
| BALANCE/LEAK OFF | | | | | | |
| DRAIN | | | | | | |
| VENT | | | | | | |
| PRESSURE GAGE | | | | | | |
| TEMP GAGE | | | | | | |
| WARM-UP LINE | | | | | | |

Drain Valve Supplied By: SUPPLIER
DRAINS MANIFOLDED: YES
VENT Valve Supplied By: SUPPLIER
VENTS MANIFOLDED: YES
THREADED CONS FOR PIPELINE SERVICE & < 50°C (6.4.3.2)
SPECIAL FITTINGS FOR TRANSITIONING (6.4.3.3)
CYLINDRICAL THREADS REQUIRED (6.4.3.8)
GUSSET SUPPORT REQUIRED
MACHINED AND STUDDED CONNECTIONS (6.4.3.12)
VS 6 DRAIN: N/A
DRAIN TO SKID EDGE: YES

**MATERIAL (6.12.1.1)**

APPENDIX H CLASS: S-6 (Note 25)
MIN DESIGN METAL TEMP (6.12.4.1) °C
REDUCED-HARDNESS MATERIALS REQ'D (6.12.1.12.1)
Applicable Hardness Standard (6.12.1.12.3)
BARREL :
CASE : Killed Carbon Steel (KCS)
DIFFUSERS
IMPELLER :
IMPELLER WEAR RING :
CASE WEAR RING :
SHAFT:
Bowl (if VS-type)
Inspection Class

**BEARINGS AND LUBRICATION (6.10.1.1)**

BEARING (TYPE / NUMBER): (6.11.4)
RADIAL /
THRUST /
REVIEW AND APPROVE THRUST BEARING SIZE : (9.2.5.2.4)

LUBRICATION : (6.10.2.2) (6.11.3) (9.6.1)
PRESSURE LUBE SYSTEM TO ISO 10438- (9.2.6.5)
ISO 10438 DATA SHEETS ATTACHED
Pressurized Lube Oil System mtd on pump baseplate
Location of Pressurized Lube Oil System mounted on baseplate :

INTERCONNECTING PIPING PROVIDED BY

OIL VISC. ISO GRADE VG
CONSTANT LEVEL OILER :

**CASING MOUNTING:** CENTERLINE (C)
**CASING TYPE:** (6.3.10)
OH3 BACKPULLOUT LIFTING DEVICE REQD. (9.1.2.6)

**CASE PRESSURE RATING:**
MAWP : (6.3.6) kg/cm²g @ °C (C)
HYDROTEST : kg/cm²g @ °C (C)

**HYDROTEST OH PUMP AS ASSEMBLY**
SUCT'N PRESS. REGIONS DESIGNED FOR MAWP: YES
**ROTATION:** (VIEWED FROM COUPLING END)
- IMPELLERS INDIVIDUALLY SECURED :
- BOLT OH 3/4/5 PUMP TO PAD / FOUNDATION :
- PROVIDE SOLEPLATE FOR OH 3/4/5 PUMPS

**ROTOR:**
SHAFT FLEXIBILITY INDEX (SFI) (9.1.1.3)
First Critical Speed Wet (Multi stage pumps only)
COMPONENT BALANCE TO ISO 1940 G1.0
SHRINK FIT -LIMITED MOVEMENT IMPELLERS (9.2.2.3)

**COUPLING:(7.2.3)** **(7.2.13.f)**
MANUFACTURER
MODEL
RATING (POWER/100 RPM)
SPACER LENGTH mm
SERVICE FACTOR
RIGID
COUPLING WITH HYDRAULIC FIT (7.2.10)
COUPLING BALANCED TO ISO 1940-1 G6.3 (7.2.3)
COUPLING WITH PROPRIETARY CLAMPING DEVICE (7.2.11)
COUPLING IN COMPLIANCE WITH (7.2.4)
COUPLING GUARD STANDARD PER (7.2.13.a)
Window on Coupling Guard

**BASEPLATE**

API BASEPLATE NUMBER :
BASEPLATE CONSTRUCTION (7.3.14)
BASEPLATE DRAINAGE (7.3.1)
MOUNTING :
NON-GROUT CONSTRUCTION : (7.3.13)
VERTICAL LEVELING SCREWS :
LONGITUDINAL DRIVER POSITIONING SCREWS :
SUPPLIED WITH :
- GROUT AND VENT HOLES
- DRAIN CONNECTION

MOUNTING PADS SIZED FOR BASEPLATE LEVELING (7.3.5)
MOUNTING PADS TO BE MACHINED (7.3.6)
PROVIDE SPACER PLATE UNDER ALL EQUIPMENT FEET
OTHER

**REMARKS :**

# MECHANICAL DATA SHEET FOR MAINLINE PUMP AT VIZAG

| 1 | Note | INSTRUMENTATION (Note-13 & 17) | |
|---|---|---|---|
| 2 | | SEE ATTACHED API-670 DATA SHEET | |
| 3 | | ACCELEROMETER (7.4.2.1) | |
| 4 | | Number of Accelerometers | |
| 5 | | Mounting Location of Accelerometers | |
| 6 | | | |
| 7 | | PROVISION FOR MTG ONLY (6.10.2.10) | |
| 8 | | Number of Accelerometers | |
| 9 | | Mounting Location of Accelerometers | |
| 10 | | | |
| 11 | | FLAT SURFACE REQUIRED (6.10.2.11) | |
| 12 | | Number of Accelerometers | |
| 13 | | Mounting Location of Accelerometers | |
| 14 | | | |
| 15 | | VIBRATION PROBES (7.4.2.2) | |
| 16 | | PROVISIONS FOR VIB. PROBES | YES |
| 17 | | NUMBER PER RADIAL BEARING | |
| 18 | | NUMBER PER AXIAL BEARING | TWO |
| | | | |
| 19 | | MONITORS AND CABLES SUPPLIED BY (7.4.2.4) | |
| 20 | | | |
| 21 | | TEMPERATURE (7.4.2.3) | |
| 22 | | PROVISIONS FOR TEMP PROBES | YES |
| 23 | | RADIAL BEARING TEMP. | YES |
| 24 | | NUMBER PER RADIAL BEARING | |
| 25 | | THRUST BEARING TEMP. | YES |
| 26 | | NUMBER PER THRUST BEARING ACTIVE SIDE | |
| 27 | | NUMBER PER THRUST BEARING INACTIVE SIDE | |
| 28 | | TEMP. GAUGES (WITH THERMOWELLS) (9.1.3.6) | |
| 29 | | PRESSURE GAUGE TYPE | |
| 30 | | **Remarks** | |
| 31 | | **1) Vendor to provide temperature and vibration** | |
| 32 | | **monitoring system for Pumps.** | |
| 33 | | **2) Vendor to provide pump casing temperature RTD.** | |
| 34 | | | |
| 35 | | | |
| 36 | | | |
| 37 | | | |
| 38 | | | |
| 39 | | | |
| 40 | | | |
| 41 | | | |
| 42 | | | |
| 43 | | | |
| 44 | | | |
| 45 | | | |
| 46 | | | |
| 47 | | | |
| 48 | | | |
| 49 | | | |
| 50 | | | |
| 51 | | | |
| 52 | | | |
| 53 | | | |
| 54 | | | |
| 55 | | | |
| 56 | | | |
| 57 | | | |
| 58 | | | |
| 59 | | | |
| 60 | | | |
| 61 | | | |
| 62 | | | |
| 63 | | | |
| 64 | | | |
| 65 | | | |

| SEAL SUPPORT SYSTEM MOUNTING | | Rev |
|---|---|---|
| SEAL SUPPORT SYSTEM MOUNTED ON PUMP BASEPLATE (7.5.1.4) | | |
| IDENTIFY LOCATION ON BASEPLATE | | |
| INTERCONNECTING PIPING BY | Supplier | |
| **MECHANICAL SEAL (6.8.1) (Note 20 & 24)** | | |
| SEE ATTACHED ISO 21049/API 682 DATA SHEET | | |
| ADDITIONAL CENTRAL FLUSH PORT (6.8.9) | | |
| HEATING JACKET REQ'D. (6.8.11) | | |
| **HEATING AND COOLING (6.1.17)** | | |
| COOLING REQ'D | | |
| COOLING WATER PIPING PLAN | | |
| COOLING WATER PIPING | | |
| FITTINGS | | |
| COOLING WATER PIPING MATERIALS | | |
| COOLING WATER REQUIREMENTS: | | |
| BEARING HOUSING | m³/h | |
| HEAT EXCHANGER | m³/h | |
| TOTAL COOLING WATER | m³/h | |
| HEATING MEDIUM | | |
| OTHER | | |
| HEATING PIPING | | |
| **PIPING & APPURTENANCES** | | |
| MANIFOLD PIPING FOR PURCHASER CONNECTION (7.5.1.6) | | |
| VENT | YES | |
| DRAIN | YES | |
| COOLING WATER | N / A | |
| TAG ALL ORIFICES (7.5.2.4) | | |
| SOCKET WELD CONN ON SEAL GLAND (7.5.2.8) | | |

# MECHANICAL DATA SHEET FOR MAINLINE PUMP AT VIZAG

| 1 | Note | SURFACE PREPARATION AND PAINT | | TEST | | Rev |
|---|---|---|---|---|---|---|
| 2 | | MANUFACTURER'S STANDARD | YES | SHOP INSPECTION (8.1.1) | Yes | |
| 3 | | OTHER (SEE BELOW) | YES | PERFORMANCE CURVE | | |
| 4 | | SPECIFICATION NO. 14495-00-PE-SPC-0005 | | & DATA APPROVAL PRIOR TO SHIPMENT. | YES | |
| 5 | | | | TEST WITH SUBSTITUTE SEAL (8.3.3.2.b) | | |
| 6 | | **PUMP:** | | MATERIAL CERTIFICATION REQUIRED CASING | YES | |
| 7 | | PUMP SURFACE PREPARATION | | (6.12.1.8) IMPELLER | YES | |
| 8 | | PRIMER | | SHAFT | YES | |
| 9 | | FINISH COAT | | OTHER | YES | |
| 10 | | | | CASTING REPAIR WELD PROCEDURE APPR REQD | YES | |
| | | **BASEPLATE:** | | (6.12.2.5) (6.12.3.1) | | |
| 11 | | BASEPLATE SURFACE PREPARATION | | INSPECTION REQUIRED FOR CONNECTION WELDS (6.12.3.4.d) | | |
| 12 | | PRIMER: | | (6.12.3.4.e) MAG PARTICLE | YES | |
| 13 | | FINISH COAT | | RADIOGRAPHY | | |
| 14 | | DETAILS OF LIFTING DEVICES | | LIQUID PENETRANT | YES | |
| 15 | | | | ULTRASONIC | YES | |
| 16 | | **SHIPMENT: (8.4.1)** | | INSPECTION REQUIRED FOR CASTINGS | | |
| 17 | | EXPORT BOXING REQUIRED | YES | MAG PARTICLE | YES | |
| 18 | | OUTDOOR STORAGE MORE THAN 6 MONTHS | YES | RADIOGRAPHY | | |
| | | | | LIQUID PENETRANT | YES | |
| 19 | | **SPARE ROTOR ASSEMBLY PACKAGED FOR:** | | ULTRASONIC | YES | |
| 20 | | ROTOR STORAGE ORIENTATION (9.2.8.2) | | HARDNESS TEST REQUIRED (8.2.2.7) | | |
| 21 | | SHIPPING & STORAGE CONTAINER FOR VERT STORAGE (9.2.8.3) | | ADDNL SUBSURFACE EXAMINATION (6.12.1.5) (8.2.1.3) | | |
| 22 | | | | FOR | | |
| 23 | | N2 PURGE (9.2.8.4) | | METHOD | | |
| 24 | | **SPARE PARTS** | | PMI TESTING REQUIRED (8.2.2.8) | | |
| 25 | | START-UP | | COMPONENTS TO BE TESTED | | |
| 26 | | NORMAL MAINTENANCE | | | | |
| 27 | | **WEIGHTS** kg | | RESIDUAL UNBALANCE TEST (J.4.1.2) | | |
| 28 | | ITEM No / PUMP / DRIVER / GEAR / BASE / TOTAL | | NOTIFICATION OF SUCCESSFUL SHOP | | |
| 29 | | | | PERFORMANCE TEST (8.1.1.c) (8.3.3.5) | | |
| 30 | | | | BASEPLATE TEST (7.3.21) | | |
| 31 | | | | HYDROSTATIC | WIT | |
| 32 | | | | HYDROSTATIC TEST OF BOWLS & COLUMN (9.3.13.2) | | |
| 33 | | **OTHER PURCHASER REQUIREMENTS** | | PERFORMANCE TEST | WIT | |
| 34 | | COORDINATION MEETING REQUIRED (10.1.3) | YES | TEST IN COMPLIANCE WITH (8.3.3.2) | | |
| 35 | | MAXIMUM DISCHARGE PRESSURE TO INCLUDE | | TEST DATA POINTS TO (8.3.3.3) | | |
| 36 | | MAX RELATIVE DENSITY | YES | TEST TOLERANCES TO (8.3.3.4) | | |
| 37 | | OPERATION TO TRIP SPEED | | NPSH (8.3.4.3.1) (8.3.4.3.4) | WIT | |
| 38 | | MAX DIA. IMPELLERS AND/OR NO OF STAGES | | NPSH-1ST STG ONLY (8.3.4.3.2) | | |
| 39 | | CONNECTION DESIGN APPROVAL (9.2.1.4) | | NPSH TESTING TO HI 1.6 OR ISO 9906 (8.3.4.3.3) | | |
| 40 | | TORSIONAL ANALYSIS / REPORT (6.9.2.10) | YES | TEST NPSHA LIMITED TO 110% SITE NPSHA (8.3.3.6) | | |
| 41 | | PROGRESS REPORTS | YES | RETEST ON SEAL LEAKAGE (8.3.3.2.d) | | |
| 42 | | OUTLINE OF PROC FOR OPTIONAL TESTS (10.2.5) | | RETEST REQUIRED AFTER FINAL HEAD ADJ (8.3.3.7.b) | | |
| 43 | | ADDITIONNAL DATA REQUIRING 20 YEARS RETENTION (8.2.1.1) | | COMPLETE UNIT TEST (8.3.4.4.1) | WIT | |
| 44 | | | | SOUND LEVEL TEST (8.3.4.5) | WIT | |
| 45 | | LATERAL ANALYSIS REQUIRED (9.1.3.4) (9.2.4.1.3) | YES | CLEANLINESS PRIOR TO FINAL ASSEMBLY (8.2.2.6) | | |
| 46 | | MODAL ANALYSIS REQUIRED (9.3.9.2) | | LOCATION OF CLEANLINESS INSPECTION | | |
| 47 | | DYNAMIC BALANCE ROTOR (6.9.4.4) | YES | NOZZLE LOAD TEST | | |
| 48 | | INSTALLATION LIST IN PROPOSAL (10.2.3.l) | YES | CHECK FOR CO-PLANAR MOUNTING PAD SURFACES | | |
| 49 | | VFD STEADY STATE DAMPED RESPONSE ANALYSIS (6.9.2.3) | | MECHANICAL RUN TEST UNTIL OIL TEMP STABLE | | |
| 50 | | | | 4 HR. MECH RUN AFTER OIL TEMP STABLE (8.3.4.2.1) | | |
| 51 | | TRANSIENT TORSIONAL RESPONSE (6.9.2.4) | | 4 HR. MECH RUN TEST (8.3.4.2.2) | WIT | |
| 52 | | BEARING LIFE CALCULATIONS REQUIRED (6.10.1.6) | | 2 HR AT MINIMUM CONTINUOUS FLOW | WIT | |
| | | IGNITION HAZARD ASSMT TO EN 13463-1 (7.2.13.e) | | BRG HSG RESONANCE TEST (8.3.4.7) | | |
| 53 | | CASING RETIREMENT THICKNESS DRAWING (10.3.2.3) | | STRUCTURAL RESONANCE TEST (9.3.9.2) | | |
| 54 | | FLANGES RQD IN PLACE OF SKT WELD UNIONS (7.5.2.8) | | REMOVE / INSPECT HYDRODYNAMIC BEARINGS AFTER TEST | | |
| 55 | | INCLUDE PLOTTED VIBRATION SPECTRA (6.9.3.3) | | (9.2.7.5) | | |
| 56 | | CONNECTION BOLTING (7.5.1.7) | | AUXILIARY EQUIPMENT TEST (8.3.4.6) | | |
| 57 | | CADMIUM PLATED BOLTS PROHIBITED | | EQUIPMENT TO BE INCLUDED IN AUXILLIARY TESTS | | |
| 58 | | VENDOR TO KEEP REPAIR AND HT RCDS (8.2.1.1.c) | YES | | | |
| 59 | | VENDOR SUBMIT TEST PROCEDURES (8.3.1.1) | YES | LOCATION OF AUXILIARY EQUIPENT TEST | | |
| 60 | | SUBMIT INSPECTION CHECK LIST (8.1.5) | | | | |
| 61 | | | | IMPACT TEST (6.12.4.3) PER EN 13445 | | |
| 62 | | | | PER ASME SECTION VIII | | |
| | | | | REMOVE CASING AFTER TEST | | |

## NOTES

| Note | | Rev |
|---|---|---|
| 1 | All data in blank fields in this data sheet to be furnished / confirmed by Supplier. | |
| 2 | Pumps shall be able to handle particles below 400 microns. Pump offered by the vendor shall be suitable for a fluid with particle size that may pass through a 40 mesh and 20 mesh during commissioning. | |
| 3 | Rated conditions will be based on operating conditions (temperature 25 deg C) and HSD fluid properties. | |
| 4 | Vendor to note that there is no utility available in the plant. Hence any cooling requirement shall be met by ambient air cooling. | |
| 5 | *Variable Frequency Drive (VFD) shall be provided for capacity control of pumps.*<br>*Pump rated speed is the speed at which rated pump condition is achieved.*<br>*VFD & Motor shall be selected for 110% of pump rated speed.*<br>*Vendor shall provide necessary documentation justifying motor selection along with bid.*<br>*Along with Bid; Vendor to provide pump performance curve for 110% of rated speed.*<br>*Vendor to indicate maximum flow achievable at 110% of pump rated speed & at 100 % rated head. (This point shall be preferably within the region of 80% to 110% of best efficiency flowrate of pump.*<br>*Pump and Pump sub-systems like Mechanical seal, Lube oil system etc. shall be selected to run at 110% of pump rated speed.* | C |
| 6 | Centrifugal type pump shall conform to the requirement of API-610. Selection, operation and maintenance of pump shall be as per OISD-STD-119, 141. | |
| 7 | The products that shall be pumped and their corresponding properties are as follows: | |

| Product | Sp. Gravity at $15^0$ C | Viscosity at $38^0$ C | Viscosity at $20^0$ C | Vapour Pressure at $38^0$ C |
|---|---|---|---|---|
| | - | Cst | Cst | $kg/cm^2a$ |
| -HSD | 0.821 – 0.845 | 2.15 @ 40 ° C | 4.5 | 0.1 |
| -MS | 0.729-0.773 | 0.51 | 0.7 | 0.6 |
| -SKO | 0.790 -0.830 | 1.18 | 1.53 | 0.3 |
| -NAPHTHA | 0.6965 | 0.45 | 0.7 | 0.7 |
| -ATF | 0.8105 | 1.18 | 1.53 | 0.3 |

| Note | | Rev |
|---|---|---|
| 8 | Automatic Minimum Recirculation Valve for each pump shall be provided. Valve shall be selected for pump minimum continuous stable flow. | |
| 9 | The pump performance curves shall be furnished at 200 rpm increments between the minimum and maximum speeds. | |
| 10 | Motor to be designed at end of the curve operation considering VFD operation. | |
| 11 | Design pressure of Vizag Pipeline is 84 kg/cm2g. | |
| 12 | Companion flanges, gaskets, nuts & bolts for Pump suction / discharge, ARV, Vent, drain & any other purchaser's interface nozzles alongwith spares specified in requisition are in vendor's scope. | |
| 13 | All pump safety requirements, instrumentation,sensors,alarms,trips, etc shall be provided by pump vendor. | |
| 14 | No negative tolerance on flow and head is acceptable. | |
| 15 | Vapour Pressure as conservative approach of 0.7 kg/cm2a of Naphtha is considered. | |
| 16 | Vendor to note that, during commissioning, water with specific gravity 1 shall be used as a pumping fluid. Vendor to provide flowrate of water. | |
| 17 | Pump Shall be provided with Vibration Monitoring System (VMS) | |
| 18 | Difference between NPSHA and NPSHR shall be minimum 1.0 m at throughout the range from minimum continuous stable flow up to end of curve. Refer requisition for NPSH test requirement. | |
| 19 | *Deleted.* | C |
| 20 | Pumps shall be provided with double mechanical seal. Seal Plan 31, 52 & 65 are required as a minimum. However, Vendor to confirm it with seal supplier. Mechanical seal shall withstand the maximum discharge pressure and the maximum allowable temperature. The pump Vendor shall advise in his Bid of the maximum dynamic and static sealing pressure and temperature. Vendor to submit Seal supplier's recommendation along with bid. | |
| 21 | Pump vendor to provide Position sensors for Pump vent & drain valves. | |
| 22 | 600# rating flange shall be WN RF type and 900# rating flange shall be WN RTJ type. | |
| 23 | Vendor to provide performance curves for this pump operation in parallel with existing pumps for all speeds. | |
| 24 | During start-up when upstream and downstream stations are pumping at turn down rate and this pump kicks-in, the suction pressure could be 30-35 kg/cm2g. However, this pressure will be lowered to rated suction pressure value as pump comes online. On shutdown of this pump, pump may experience same pressure (i.e. 30-35 kg/cm2g). Maximum discharge pressure shall be calculated considering this case. Pump mechanical seal shall be suitable for this pressure. | |
| 25 | Casing Material shall be Killed Carbon Steel (KCS), other parts materials shall be as per material class S-6. | |

**CLIENT:** HPCL

**PROJECT TITLE:** CAPACITY AUGUMENTATION OF VISAKHA-VIJAYWADA-SECUNDERABAD PIPELINE (VVSPL) PROJECT

**JOB NUMBER:** 403102-14495

**EQUIPMENT NUMBER:** 20-PA-CF-103

**EQUIPMENT SERVICE:** MS, SKO, ATF, HSD, Naphtha

**SERIAL NUMBER:**

**REQ / SPEC NO. :** 14495-00-ME-REQ-0001

**PURCH ORDER NO.**

Cells coloured thus contain drop-down options

contain calculated values based on input data do not change.

identifies a cross referenced paraghaph in the document
note may also contain a drop down list

**COMMENTS:**

| | DATA SHEETS | | | | | |
|---|---|---|---|---|---|---|
| | ITEM No. | ATT | ITEM No. | ATT | ITEM No. | ATT |
| PUMP | | | | | | |
| MOTOR | | | | | | |
| GEAR | | | | | | |
| TURBINE | | | | | | |

APPLICABLE OVERLAY STANDARDS

| Rev | Date | Description | By | Checked | Approved | | | |
|---|---|---|---|---|---|---|---|---|
| | | | | | | | | |
| | | | | | S.R. Halke | | | |
| C | 23.Feb.2017 | RE-ISSUED FOR INFORMATION | KAMY | RANS | HALS | | | |
| B | 13.Feb.2017 | ISSUED FOR INFORMATION | KAMY | RANS | HALS | | | |
| A | 27.Jan.2017 | ISSUED FOR INTER DISCIPLINE CHECK | KAMY | HALS | HALS | | | |

**MECHANICAL DATASHEET FOR MAINLINE PUMPS AT RAJAHMUNDRY**

DATA SHEET No.

**14495-20-ME-DAS-0001**

# MECHANICAL DATASHEET FOR MAINLINE PUMPS AT RAJAHMUNDRY

| | | | | | |
|---|---|---|---|---|---|
| 1 | Note | APPLICABLE TO: | PROPOSAL | APPLICABLE NTL/INTNTL STANDARD: | API-610 |
| 2 | | FOR | VVSPL Capacity Aumentation Project | UNIT | Rajahmundry Pumping Station |
| 3 | | SITE | Rajahmundry | SERVICE | Rajahmundry New Mainline Pump |
| 4 | | NO. REQ 1 (1W + 0S) | PUMP SIZE | TYPE | No. STAGES * |
| 5 | | MANUFACTURER | * | MODEL * | SERIAL NO. |

**LIQUID CHARACTERISTICS**

| | Units | Maximum | Minimum |
|---|---|---|---|
| LIQUID TYPE OR NAME : | HSD ( Note 3,6) | | |
| VAPOR PRESSURE : | kg/cm2a | 0.7 (Note 15) | |
| RELATIVE DENSITY : | | 0.835 | |
| SPECIFIC HEAT : | kcal/(kg-K) | | |
| VISCOSITY : | cP | Note 7 | |

**OPERATING CONDITIONS (6.1.2)**

| | Units | Maximum | Rated | Normal | Minimum |
|---|---|---|---|---|---|
| NPSHa Datum: | | | C.L. Impeller | | |
| PUMPING TEMPERATURE : | ° C | 50.0 | 25.0 | | 15 |
| FLOW : | m3/hr | | 580.0 | | Note-8 |
| DISCHARGE PRESSURE : (6.3.2) | kg/cm2g | | 73.25 | | |
| SUCTION PRESSURE : | kg/cm2g | | 4.63 (Note 24) | | |
| DIFFERENTIAL PRESSURE : | kg/cm2 | | 68.6 | | |
| DIFFERENTIAL HEAD : | m | | 821.5 | | |
| $NPSH_A$ : | m | | 57.5 | Note 18 | |
| HYDRAULIC POWER : | kW | | - | | |

| | | Rev |
|---|---|---|
| SERVICE : | CONTINUOUS | |
| PUMPS OPERATE IN: | PARALLEL | |
| CORROSION DUE TO : (6.12.1.9) | NIL | |
| EROSION DUE TO : (6.12.1.9) | NIL | |
| H2S CONCENTRATION (ppm) : (6.12.1.12) | Nil | |
| CHLORIDE CONCENTRATION (ppm) : | Nil | |
| PARTICULATE SIZE (DIA IN MICRONS) | Note 2 | |
| PARTICULATE CONCENTRATION (PPM) | - | |
| CORROSIVE | YES | C |
| EROSIVE | NO | |
| FLAMMABLE | YES | |
| TOXIC | NO | |

**SITE AND UTILITY DATA**

**LOCATION:**

INDOOR | UNHEATED | UNDER ROOF

**MOUNTED AT :** GRADE ❍ TROPICALISATION REQD

**ELECTRIC AREA CLASSIFICATION:** 6.1.22 ZONE 2

GROUP Group IIA | Group IIB TEMP CLASS T3

**SITE DATA :**

**ELEVATION (MSL) :** 38.399 m **BAROMETER :** ____ mmHg

RANGE OF AMBIENT TEMPS:MIN / MAX 16.3 / 42.4 °C

RELATIVE HUMIDITY: MIN / MAX ____ / ____ %

**UNUSUAL CONDITIONS:**

**UTILITY CONDITIONS :**

| **ELECTRICITY :** | DRIVERS | HEATING | CONTROL | SHUTDOWN |
|---|---|---|---|---|
| VOLTAGE | 6600 | 240 | | |
| PHASE | 3 | 1 | | |
| HERTZ | 50 | 50 | | |

**COOLING WATER :** (Not available) Note 4

| | INLET | RETURN | DESIGN |
|---|---|---|---|
| TEMP °C | | MAX | |
| PRESS. kg/cm²g | | MIN | |

SOURCE

COOLING WATER CHLORIDE CONCENTRATION: ____ ppm

**INSTRUMENT AIR :** MAX ____ kg/cm²g MIN ____ kg/cm²g

**STEAM**

| | | DRIVERS | HEATING |
|---|---|---|---|
| TEMP °C | Max | | |
| | Min | | |
| PRESS. kg/cm²g | Max | | |
| | Min | | |

**PERFORMANCE (Note 9, 11 & 23)**

| | | | |
|---|---|---|---|
| PROPOSAL CURVE NO. | RPM | | |
| As Tested Curve No. | | | |
| IMPELLER DIA.: RATED | MAX. | MIN. | mm |
| RATED POWER | kW | EFFICIENCY | (%) |
| RATED CURVE BEP FLOW (at rated impeller dia) | | | m³/h |
| MIN FLOW : THERMAL | m³/h | STABLE | m³/h |
| PREFERRED OPERATING REGION (6.1.11) | | to | m³/h |
| ALLOWABLE OPERATING REGION | | to | m³/h |
| MAX HEAD @ RATED IMPELLER | | | m |
| MAX POWER @ RATED IMPELLER | (6.8.9) | | kW |
| NPSH3 AT RATED FLOW : | | | m |
| CL PUMP TO U/S BASEPLATE | | | m |
| NPSH MARGIN AT RATED FLOW : | | | m |
| SPECIFIC SPEED (6.1.9) | | m3/h, rpm, m | |
| SUCTION SPECIFIC SPEED LIMIT | | | |
| SUCTION SPECIFIC SPEED | | m3/h, rpm, m | |
| MAX. ALLOW. SOUND PRESS. LEVEL REQD (6.1.14) | | 85 | (dBA) |
| EST MAX SOUND PRESS. LEVEL | | | (dBA) |
| MAX. SOUND POWER LEVEL REQ'D (6.1.14) | | | |
| EST MAX SOUND POWER LEVEL | | | |

**DRIVER (7.1.5) (Note 5 & 10)**

| | |
|---|---|
| Driver Type | MOTOR |
| GEAR | |
| VARIABLE SPEED REQUIRED | YES |
| SOURCE OF VARIABLE SPEED | Motor |
| OTHER | VFD |
| MANUFACTURER | |
| NAMEPLATE POWER | kW |
| Nominal RPM | |
| RATED LOAD RPM | |
| FRAME OR MODEL | |
| ORIENTATION | HORIZONTAL |
| LUBE | |
| BEARING TYPE: | |
| RADIAL | / |
| THRUST | / |
| STARTING METHOD | Open Valve (Fully-Loaded) |
| SEE DRIVER DATA SHEET | |

# MECHANICAL DATASHEET FOR MAINLINE PUMPS AT RAJAHMUNDRY

| 1 | Note | CONSTRUCTION | Rev |
|---|---|---|---|

**API PUMP TYPE:** *BB3* **[Based on API 610 definitions]**

**NOZZLE CONNECTIONS:** (6.5.5) **(Note 12 & 22)**

| | Size | Facing | Rating | Position |
|---|---|---|---|---|
| SUCTION | | | | *SIDE* |
| DISCHARGE | | | | *SIDE* |

**PRESSURE CASING AUX. CONNECTIONS: (6.4.3.2)**

| | No. | Size | Type | Facing | Rating | Posn. |
|---|---|---|---|---|---|---|
| BALANCE/LEAK OFF | | | | | | |
| DRAIN | | | | | | |
| VENT | | | | | | |
| PRESSURE GAGE | | | | | | |
| TEMP GAGE | | | | | | |
| WARM-UP LINE | | | | | | |

Drain Valve Supplied By: SUPPLIER
DRAINS MANIFOLDED: YES
VENT Valve Supplied By: SUPPLIER
VENTS MANIFOLDED: YES
THREADED CONS FOR PIPELINE SERVICE & < 50°C (6.4.3.2)
SPECIAL FITTINGS FOR TRANSITIONING (6.4.3.3)
CYLINDRICAL THREADS REQUIRED (6.4.3.8)
GUSSET SUPPORT REQUIRED
MACHINED AND STUDDED CONNECTIONS (6.4.3.12)
VS 6 DRAIN: N/A
DRAIN TO SKID EDGE: YES

**MATERIAL (6.12.1.1)**

APPENDIX H CLASS: S-6 **(Note 25)**
MIN DESIGN METAL TEMP (6.12.4.1) °C
REDUCED-HARDNESS MATERIALS REQ'D (6.12.1.12.1)
Applicable Hardness Standard (6.12.1.12.3)
BARREL :
CASE : Killed Carbon Steel (KCS)
DIFFUSERS
IMPELLER :
IMPELLER WEAR RING :
CASE WEAR RING :
SHAFT:
Bowl (if VS-type)
Inspection Class

**BEARINGS AND LUBRICATION (6.10.1.1)**

BEARING (TYPE / NUMBER): (6.11.4)
RADIAL /
THRUST /
REVIEW AND APPROVE THRUST BEARING SIZE : (9.2.5.2.4)

LUBRICATION : (6.10.2.2) (6.11.3) (9.6.1)
PRESSURE LUBE SYSTEM TO ISO 10438- (9.2.6.5)
ISO 10438 DATA SHEETS ATTACHED
Pressurized Lube Oil System mtd on pump baseplate
Location of Pressurized Lube Oil System mounted on baseplate :

INTERCONNECTING PIPING PROVIDED BY

OIL VISC. ISO GRADE VG
CONSTANT LEVEL OILER :

**CASING MOUNTING:** CENTERLINE (C)
**CASING TYPE:** (6.3.10)
OH3 BACKPULLOUT LIFTING DEVICE REQD. (9.1.2.6)

**CASE PRESSURE RATING:**
MAWP : (6.3.6) kg/cm²g @ °C (C)
HYDROTEST : kg/cm²g @ °C (C)

**HYDROTEST OH PUMP AS ASSEMBLY**
SUCT'N PRESS. REGIONS DESIGNED FOR MAWP: YES
**ROTATION:** (VIEWED FROM COUPLING END)
- IMPELLERS INDIVIDUALLY SECURED :
- BOLT OH 3/4/5 PUMP TO PAD / FOUNDATION :
- PROVIDE SOLEPLATE FOR OH 3/4/5 PUMPS

**ROTOR:**
SHAFT FLEXIBILITY INDEX (SFI) (9.1.1.3)
First Critical Speed Wet (Multi stage pumps only)
COMPONENT BALANCE TO ISO 1940 G1.0
SHRINK FIT -LIMITED MOVEMENT IMPELLERS (9.2.2.3)

**COUPLING:(7.2.3)** **(7.2.13.f)**
MANUFACTURER
MODEL
RATING (POWER/100 RPM)
SPACER LENGTH mm
SERVICE FACTOR
RIGID
COUPLING WITH HYDRAULIC FIT (7.2.10)
COUPLING BALANCED TO ISO 1940-1 G6.3 (7.2.3)
COUPLING WITH PROPRIETARY CLAMPING DEVICE (7.2.11)

COUPLING IN COMPLIANCE WITH (7.2.4)
COUPLING GUARD STANDARD PER (7.2.13.a)
Window on Coupling Guard

**BASEPLATE**

API BASEPLATE NUMBER :
BASEPLATE CONSTRUCTION (7.3.14)
BASEPLATE DRAINAGE (7.3.1)
MOUNTING :
NON-GROUT CONSTRUCTION : (7.3.13)
VERTICAL LEVELING SCREWS :
LONGITUDINAL DRIVER POSITIONING SCREWS :
SUPPLIED WITH :
- GROUT AND VENT HOLES
- DRAIN CONNECTION

MOUNTING PADS SIZED FOR BASEPLATE LEVELING (7.3.5)
MOUNTING PADS TO BE MACHINED (7.3.6)
PROVIDE SPACER PLATE UNDER ALL EQUIPMENT FEET
OTHER

**REMARKS :**

# MECHANICAL DATASHEET FOR MAINLINE PUMPS AT RAJAHMUNDRY

| 1 | Note | INSTRUMENTATION (Note 13 & 17) | |
|---|---|---|---|
| 2 | | SEE ATTACHED API-670 DATA SHEET | |
| 3 | | ACCELEROMETER (7.4.2.1) | |
| 4 | | Number of Accelerometers | |
| 5 | | Mounting Location of Accelerometers | |
| 6 | | | |
| 7 | | PROVISION FOR MTG ONLY (6.10.2.10) | |
| 8 | | Number of Accelerometers | |
| 9 | | Mounting Location of Accelerometers | |
| 10 | | | |
| 11 | | FLAT SURFACE REQUIRED (6.10.2.11) | |
| 12 | | Number of Accelerometers | |
| 13 | | Mounting Location of Accelerometers | |
| 14 | | | |
| 15 | | VIBRATION PROBES (7.4.2.2) | |
| 16 | | PROVISIONS FOR VIB. PROBES | YES |
| 17 | | NUMBER PER RADIAL BEARING | |
| 18 | | NUMBER PER AXIAL BEARING | TWO |
| | | | |
| 19 | | MONITORS AND CABLES SUPPLIED BY (7.4.2.4) | |
| 20 | | | |
| 21 | | TEMPERATURE (7.4.2.3) | |
| 22 | | PROVISIONS FOR TEMP PROBES | YES |
| 23 | | RADIAL BEARING TEMP. | YES |
| 24 | | NUMBER PER RADIAL BEARING | |
| 25 | | THRUST BEARING TEMP. | YES |
| 26 | | NUMBER PER THRUST BEARING ACTIVE SIDE | |
| 27 | | NUMBER PER THRUST BEARING INACTIVE SIDE | |
| 28 | | TEMP. GAUGES (WITH THERMOWELLS) (9.1.3.6) | |
| 29 | | PRESSURE GAUGE TYPE | |
| 30 | | **Remarks** | |
| 31 | | **1) Vendor to provide temperature and vibration** | |
| 32 | | **monitoring system for Pumps.** | |
| 33 | | **2) Vendor to provide pump casing temperature RTD.** | |
| 34 | | | |
| 35 | | | |
| 36 | | | |
| 37 | | | |
| 38 | | | |
| 39 | | | |
| 40 | | | |
| 41 | | | |
| 42 | | | |
| 43 | | | |
| 44 | | | |
| 45 | | | |
| 46 | | | |
| 47 | | | |
| 48 | | | |
| 49 | | | |
| 50 | | | |
| 51 | | | |
| 52 | | | |
| 53 | | | |
| 54 | | | |
| 55 | | | |
| 56 | | | |
| 57 | | | |
| 58 | | | |
| 59 | | | |
| 60 | | | |
| 61 | | | |
| 62 | | | |
| 63 | | | |
| 64 | | | |
| 65 | | | |

| SEAL SUPPORT SYSTEM MOUNTING | | Rev |
|---|---|---|
| SEAL SUPPORT SYSTEM MOUNTED ON PUMP BASEPLATE (7.5.1.4) | | |
| IDENTIFY LOCATION ON BASEPLATE | | |
| INTERCONNECTING PIPING BY | Supplier | |

| MECHANICAL SEAL (6.8.1) (Note 20 & 24) | |
|---|---|
| SEE ATTACHED ISO 21049/API 682 DATA SHEET | |
| ADDITIONAL CENTRAL FLUSH PORT (6.8.9) | |
| HEATING JACKET REQ'D. (6.8.11) | |

| HEATING AND COOLING (6.1.17) | | |
|---|---|---|
| COOLING REQ'D | | |
| COOLING WATER PIPING PLAN | | |
| COOLING WATER PIPING | | |
| FITTINGS | | |
| COOLING WATER PIPING MATERIALS | | |
| COOLING WATER REQUIREMENTS: | | |
| BEARING HOUSING | | $m^3/h$ |
| HEAT EXCHANGER | | $m^3/h$ |
| TOTAL COOLING WATER | | $m^3/h$ |
| HEATING MEDIUM | | |
| OTHER | | |
| HEATING PIPING | | |

| PIPING & APPURTENANCES | |
|---|---|
| MANIFOLD PIPING FOR PURCHASER CONNECTION (7.5.1.6) | |
| VENT | YES |
| DRAIN | YES |
| COOLING WATER | N / A |
| TAG ALL ORIFICES (7.5.2.4) | |
| SOCKET WELD CONN ON SEAL GLAND (7.5.2.8) | |

# MECHANICAL DATASHEET FOR MAINLINE PUMPS AT RAJAHMUNDRY

| 1 | Note | SURFACE PREPARATION AND PAINT | |
|---|---|---|---|
| 2 | | MANUFACTURER'S STANDARD | YES |
| 3 | | OTHER (SEE BELOW) | YES |
| 4 | | SPECIFICATION NO. | 14495-00-PE-SPC-0005 |
| 5 | | | |
| 6 | | **PUMP:** | |
| 7 | | PUMP SURFACE PREPARATION | |
| 8 | | PRIMER | |
| 9 | | FINISH COAT | |
| 10 | | | |
| | | **BASEPLATE:** | |
| 11 | | BASEPLATE SURFACE PREPARATION | |
| 12 | | PRIMER: | |
| 13 | | FINISH COAT | |
| 14 | | DETAILS OF LIFTING DEVICES | |
| 15 | | | |
| 16 | | **SHIPMENT: (8.4.1)** | |
| 17 | | EXPORT BOXING REQUIRED | YES |
| 18 | | OUTDOOR STORAGE MORE THAN 6 MONTHS | YES |
| | | | |
| 19 | | **SPARE ROTOR ASSEMBLY PACKAGED FOR:** | |
| 20 | | ROTOR STORAGE ORIENTATION (9.2.8.2) | |
| 21 | | SHIPPING & STORAGE CONTAINER FOR VERT STORAGE (9.2.8.3) | |
| 22 | | | |
| 23 | | N2 PURGE (9.2.8.4) | |
| 24 | | **SPARE PARTS** | |
| 25 | | START-UP | |
| 26 | | NORMAL MAINTENANCE | |
| 27 | | **WEIGHTS** kg | |

| 28 | ITEM No | PUMP | DRIVER | GEAR | BASE | TOTAL |
|---|---|---|---|---|---|---|
| 29 | | | | | | |
| 30 | | | | | | |
| 31 | | | | | | |
| 32 | | | | | | |

| 33 | OTHER PURCHASER REQUIREMENTS | |
|---|---|---|
| 34 | COORDINATION MEETING REQUIRED (10.1.3) | YES |
| 35 | MAXIMUM DISCHARGE PRESSURE TO INCLUDE | |
| 36 | MAX RELATIVE DENSITY | YES |
| 37 | OPERATION TO TRIP SPEED | |
| 38 | MAX DIA. IMPELLERS AND/OR NO OF STAGES | |
| 39 | CONNECTION DESIGN APPROVAL (9.2.1.4) | |
| 40 | TORSIONAL ANALYSIS / REPORT (6.9.2.10) | YES |
| 41 | PROGRESS REPORTS | YES |
| 42 | OUTLINE OF PROC FOR OPTIONAL TESTS (10.2.5) | |
| 43 | ADDITIONNAL DATA REQUIRING 20 YEARS RETENTION (8.2.1.1) | |
| 44 | | |
| 45 | LATERAL ANALYSIS REQUIRED (9.1.3.4) (9.2.4.1.3) | YES |
| 46 | MODAL ANALYSIS REQUIRED (9.3.9.2) | |
| 47 | DYNAMIC BALANCE ROTOR (6.9.4.4) | YES |
| 48 | INSTALLATION LIST IN PROPOSAL (10.2.3.l) | YES |
| 49 | VFD STEADY STATE DAMPED RESPONSE ANALYSIS (6.9.2.3) | |
| 50 | | |
| 51 | TRANSIENT TORSIONAL RESPONSE (6.9.2.4) | |
| 52 | BEARING LIFE CALCULATIONS REQUIRED (6.10.1.6) | |
| | IGNITION HAZARD ASSMT TO EN 13463-1 (7.2.13.e) | |
| 53 | CASING RETIREMENT THICKNESS DRAWING (10.3.2.3) | |
| 54 | FLANGES RQD IN PLACE OF SKT WELD UNIONS (7.5.2.8) | |
| 55 | INCLUDE PLOTTED VIBRATION SPECTRA (6.9.3.3) | |
| 56 | CONNECTION BOLTING (7.5.1.7) | |
| 57 | CADMIUM PLATED BOLTS PROHIBITED | |
| 58 | VENDOR TO KEEP REPAIR AND HT RCDS (8.2.1.1.c) | YES |
| 59 | VENDOR SUBMIT TEST PROCEDURES (8.3.1.1) | YES |
| 60 | SUBMIT INSPECTION CHECK LIST (8.1.5) | |
| 61 | | |
| 62 | | |

| | TEST | | | Rev |
|---|---|---|---|---|
| 2 | SHOP INSPECTION (8.1.1) | | Yes | |
| 3 | PERFORMANCE CURVE | | | |
| 4 | & DATA APPROVAL PRIOR TO SHIPMENT. | | YES | |
| 5 | TEST WITH SUBSTITUTE SEAL (8.3.3.2.b) | | | |
| 6 | MATERIAL CERTIFICATION REQUIRED | CASING | YES | |
| 7 | (6.12.1.8) | IMPELLER | YES | |
| 8 | | SHAFT | YES | |
| 9 | | OTHER | YES | |
| 10 | CASTING REPAIR WELD PROCEDURE APPR REQD | | YES | |
| | (6.12.2.5) (6.12.3.1) | | | |
| 11 | INSPECTION REQUIRED FOR CONNECTION WELDS (6.12.3.4.d) | | | |
| 12 | (6.12.3.4.e) | MAG PARTICLE | YES | |
| 13 | | RADIOGRAPHY | | |
| 14 | | LIQUID PENETRANT | YES | |
| 15 | | ULTRASONIC | YES | |
| 16 | INSPECTION REQUIRED FOR CASTINGS | | | |
| 17 | | MAG PARTICLE | YES | |
| 18 | | RADIOGRAPHY | | |
| | | LIQUID PENETRANT | YES | |
| 19 | | ULTRASONIC | YES | |
| 20 | HARDNESS TEST REQUIRED (8.2.2.7) | | | |
| 21 | ADDNL SUBSURFACE EXAMINATION (6.12.1.5) (8.2.1.3) | | | |
| 22 | | FOR | | |
| 23 | | METHOD | | |
| 24 | PMI TESTING REQUIRED (8.2.2.8) | | | |
| 25 | COMPONENTS TO BE TESTED | | | |
| 26 | | | | |
| 27 | RESIDUAL UNBALANCE TEST (J.4.1.2) | | | |
| 28 | NOTIFICATION OF SUCCESSFUL SHOP | | | |
| 29 | PERFORMANCE TEST (8.1.1.c) (8.3.3.5) | | | |
| 30 | BASEPLATE TEST (7.3.21) | | | |
| 31 | HYDROSTATIC | | WIT | |
| 32 | HYDROSTATIC TEST OF BOWLS & COLUMN (9.3.13.2) | | | |
| 33 | PERFORMANCE TEST | | WIT | |
| 34 | TEST IN COMPLIANCE WITH (8.3.3.2) | | | |
| 35 | TEST DATA POINTS TO (8.3.3.3) | | | |
| 36 | TEST TOLERANCES TO (8.3.3.4) | | | |
| 37 | NPSH (8.3.4.3.1) (8.3.4.3.4) | | WIT | |
| 38 | NPSH-1ST STG ONLY (8.3.4.3.2) | | | |
| 39 | NPSH TESTING TO HI 1.6 OR ISO 9906 (8.3.4.3.3) | | | |
| 40 | TEST NPSHA LIMITED TO 110% SITE NPSHA (8.3.3.6) | | | |
| 41 | RETEST ON SEAL LEAKAGE (8.3.3.2.d) | | | |
| 42 | RETEST REQUIRED AFTER FINAL HEAD ADJ (8.3.3.7.b) | | | |
| 43 | COMPLETE UNIT TEST (8.3.4.4.1) | | WIT | |
| 44 | SOUND LEVEL TEST (8.3.4.5) | | WIT | |
| 45 | CLEANLINESS PRIOR TO FINAL ASSEMBLY (8.2.2.6) | | | |
| 46 | LOCATION OF CLEANLINESS INSPECTION | | | |
| 47 | NOZZLE LOAD TEST | | | |
| 48 | CHECK FOR CO-PLANAR MOUNTING PAD SURFACES | | | |
| 49 | MECHANICAL RUN TEST UNTIL OIL TEMP STABLE | | | |
| 50 | 4 HR. MECH RUN AFTER OIL TEMP STABLE (8.3.4.2.1) | | | |
| 51 | 4 HR. MECH RUN TEST (8.3.4.2.2) | | WIT | |
| 52 | 2 HR AT MINIMUM CONTINUOUS FLOW | | WIT | |
| | BRG HSG RESONANCE TEST (8.3.4.7) | | | |
| 53 | STRUCTURAL RESONANCE TEST (9.3.9.2) | | | |
| 54 | REMOVE / INSPECT HYDRODYNAMIC BEARINGS AFTER TEST | | | |
| 55 | (9.2.7.5) | | | |
| 56 | AUXILIARY EQUIPMENT TEST (8.3.4.6) | | | |
| 57 | EQUIPMENT TO BE INCLUDED IN AUXILLIARY TESTS | | | |
| 58 | | | | |
| 59 | LOCATION OF AUXILIARY EQUIPENT TEST | | | |
| 60 | | | | |
| 61 | IMPACT TEST (6.12.4.3) | PER EN 13445 | | |
| 62 | | PER ASME SECTION VIII | | |
| | REMOVE CASING AFTER TEST | | | |

## NOTES

| Note | | Rev |
|---|---|---|
| 1 | All data in blank fields in this data sheet to be furnished / confirmed by Supplier. | |
| 2 | Pumps shall be able to handle particles below 400 microns. Pump offered by the vendor shall be suitable for a fluid with particle size that may pass through a 40 mesh and 20 mesh during commissioning. | |
| 3 | Rated conditions will be based on operating conditions (temperature 25 deg C) and HSD fluid properties. | |
| 4 | Vendor to note that there is no utility available in the plant. Hence any cooling requirement shall be met by ambient air cooling. | |
| 5 | *Variable Frequency Drive (VFD) shall be provided for capacity control of pumps.*<br>*Pump rated speed is the speed at which rated pump condition is achieved.*<br>*VFD & Motor shall be selected for 110% of pump rated speed.*<br>*Vendor shall provide necessary documentation justifying motor selection along with bid.*<br>*Along with Bid; Vendor to provide pump performance curve for 110% of rated speed.*<br>*Vendor to indicate maximum flow achievable at 110% of pump rated speed & at 100 % rated head. (This point shall be preferably within the region of 80% to 110% of best efficiency flowrate of pump.*<br>*Pump and Pump sub-systems like Mechanical seal, Lube oil system etc. shall be selected to run at 110% of pump rated speed.* | C |
| 6 | Centrifugal type pump shall conform to the requirement of API-610. Selection, operation and maintenance of pump shall be as per OISD-STD-119, 141. | |
| 7 | The products that shall be pumped and their corresponding properties are as follows: | |

| Product | Sp. Gravity at $15^0$ C | Viscosity at $38^0$ C | Viscosity at $20^0$ C | Vapour Pressure at $38^0$ C |
|---|---|---|---|---|
| | - | Cst | Cst | $kg/cm^2a$ |
| -HSD | 0.821 – 0.845 | 2.15 @ 40 ° C | 4.5 | 0.1 |
| - MS | 0.729-0.773 | 0.51 | 0.7 | 0.6 |
| - SKO | 0.790 -0.830 | 1.18 | 1.53 | 0.3 |
| - NAPTHA | 0.6965 | 0.45 | 0.7 | 0.7 |
| - ATF | 0.8105 | 1.18 | 1.53 | 0.3 |

| | | |
|---|---|---|
| 8 | Automatic Minimum Recirculation Valve for each pump shall be provided. Valve shall be selected for pump minimum continuous stable flow. | |
| 9 | The pump performance curves shall be furnished at 200 rpm increments between the minimum and maximum speeds. | |
| 10 | Motor to be designed at end of the curve operation considering VFD operation. | |
| 11 | Design pressure of Rajahmundry Pipeline is 84 kg/cm2g. | |
| 12 | Companion flanges, gaskets, nuts & bolts for Pump suction / discharge, ARV, Vent, drain & any other purchaser's interface nozzles alongwith spares specified in requisition are in vendor's scope. | |
| 13 | All pump safety requirements, instrumentation,sensors,alarms,trips, etc shall be provided by pump vendor. | |
| 14 | No negative tolerance on flow and head is acceptable. | |
| 15 | Vapour Pressure as conservative approach of 0.7 kg/cm2a of Naptha is considered. | |
| 16 | Vendor to note that, during commissioning, water with specific gravity 1 shall be used as a pumping fluid. Vendor to provide flowrate of water. | |
| 17 | Pump Shall be provided with Vibration Monitoring System (VMS) | |
| 18 | Difference between NPSHA and NPSHR shall be minimum 1.0 m at throughout the range from minimum continuous stable flow up to end of curve. Refer requisition for NPSH test requirement. | |
| 19 | Deleted | C |
| 20 | Pumps shall be provided with double mechanical seal. Seal Plan 31, 52 & 65 are required as a minimum. However, Vendor to confirm it with seal supplier. Mechanical seal shall withstand the maximum discharge pressure and the maximum allowable temperature. The pump Vendor shall advise in his Bid of the maximum dynamic and static sealing pressure and temperature. Vendor to submit Seal supplier's recommendation along with bid. | |
| 21 | Pump vendor to provide Position sensors for Pump vent & drain valves. | |
| 22 | 600# rating flange shall be WN RF type and 900# rating flange shall be WN RTJ type | |
| 23 | Vendor to provide performance curves for this pump operation in parallel with existing pumps for all speeds. | |
| 24 | During start-up when upstream and downstream stations are pumping at turn down rate and this pump kicks-in, the suction pressure could be 30-35 kg/cm2g. However, this pressure will be lowered to rated suction pressure value as pump comes online. On shutdown of this pump, pump may experience same pressure (i.e. 30-35 kg/cm2g). Maximum discharge pressure shall be calculated considering this case. Pump mechanical seal shall be suitable for this pressure. | |
| 25 | Casing Material shall be Killed Carbon Steel (KCS), other parts materials shall be as per material class S-6. | |

| | |
|---|---|
| **CLIENT:** | HPCL |
| **PROJECT TITLE:** | CAPACITY AUGUMENTATION OF VISAKHA-VIJAYWADA-SECUNDERABAD PIPELINE (VVSPL) PROJECT |
| **JOB NUMBER:** | 403102-14495 |
| **EQUIPMENT NUMBER:** | 30-PA-CF-101D |
| **EQUIPMENT SERVICE:** | MS, SKO, ATF, HSD, Naphtha |
| **SERIAL NUMBER:** | |
| **REQ / SPEC NO. :** | 14495-00-ME-REQ-0001 |
| **PURCH ORDER NO.** | |

Cells coloured thus contain drop-down options

contain calculated values based on input data do not change.

identifies a cross referenced paraghaph in the document
note may also contain a drop down list

**COMMENTS:**

| | DATA SHEETS | | | | | |
|---|---|---|---|---|---|---|
| | ITEM No. | ATT | ITEM No. | ATT | ITEM No. | ATT |
| PUMP | | | | | | |
| MOTOR | | | | | | |
| GEAR | | | | | | |
| TURBINE | | | | | | |

APPLICABLE OVERLAY STANDARDS

| Rev | Date | Description | By | Checked | Approved | | | |
|---|---|---|---|---|---|---|---|---|
| | | | | | | | | |
| | | | | | S.R. Hotte | | | |
| C | 23.Feb.2017 | RE-ISSUED FOR INFORMATION | KAMY | RANS | HALS | | | |
| B | 13.Feb.2017 | ISSUED FOR INFORMATION | KAMY | RANS | HALS | | | |
| A | 27.Jan.2017 | ISSUED FOR INTER DISCIPLINE CHECK | KAMY | HALS | HALS | | | |

**MECHANICAL DATASHEET FOR MAINLINE PUMP AT VIJAYWADA**

DATA SHEET No.

**14495-30-ME-DAS-0001**

# MECHANICAL DATASHEET FOR MAINLINE PUMP AT VIJAYWADA

| | | | | | |
|---|---|---|---|---|---|
| APPLICABLE TO: | PROPOSAL | APPLICABLE NTL/INTNTL STANDARD: | API-610 | | |
| FOR | VVSPL Capacity Aumentation Project | UNIT | Vijaywada Pumping Station | | |
| SITE | Vijayawada | SERVICE | Vijaywada New Mainline Pump | | |
| NO. REQ | 1 (1W + 0S) | PUMP SIZE | | TYPE | | No. STAGES | * |
| MANUFACTURER | * | MODEL | * | SERIAL NO. | |

**LIQUID CHARACTERISTICS**

| | Units | Maximum | Minimum |
|---|---|---|---|
| LIQUID TYPE OR NAME : | HSD ( Note 3,6) | | |
| VAPOR PRESSURE : | kg/cm2a | 0.7 (Note 15) | |
| RELATIVE DENSITY : | | 0.835 | |
| SPECIFIC HEAT : | kcal/(kg-K) | | |
| VISCOSITY : | cP | Note 7 | |

**OPERATING CONDITIONS (6.1.2)**

| | Units | Maximum | Rated | Normal | Minimum |
|---|---|---|---|---|---|
| NPSHa Datum: | | | C.L. Impeller | | |
| PUMPING TEMPERATURE : | ° C | 50.0 | 25.0 | | 15 |
| FLOW : | m3/hr | | 275.0 | | Note-8 |
| DISCHARGE PRESSURE : (6.3.2) | kg/cm2g | | 83.13 | | |
| SUCTION PRESSURE : | kg/cm2g | | 5.02 (Note 24) | | |
| DIFFERENTIAL PRESSURE : | kg/cm2 | | 78.10 | | |
| DIFFERENTIAL HEAD : | m | | 935.0 | | |
| $NPSH_A$ : | m | | 62 | (Note 18) | |
| HYDRAULIC POWER : | kW | | - | | |

| | |
|---|---|
| SERVICE : | CONTINUOUS |
| PUMPS OPERATE IN: | PARALLEL |
| CORROSION DUE TO : (6.12.1.9) | NIL |
| EROSION DUE TO : (6.12.1.9) | NIL |
| H2S CONCENTRATION (ppm) : (6.12.1.12) | Nil |
| CHLORIDE CONCENTRATION (ppm) : | Nil |
| PARTICULATE SIZE (DIA IN MICRONS) | Note 2 |
| PARTICULATE CONCENTRATION (PPM) | - |
| CORROSIVE | YES |
| EROSIVE | NO |
| FLAMMABLE | YES |
| TOXIC | NO |

C

**SITE AND UTILITY DATA**

**LOCATION:**

INDOOR | UNHEATED | UNDER ROOF

**MOUNTED AT :** GRADE ❍ TROPICALISATION REQD

**ELECTRIC AREA CLASSIFICATION:** 6.1.22 ZONE 2

GROUP Group IIA | Group IIB TEMP CLASS T3

**SITE DATA :**

**ELEVATION (MSL) :** 38.9 m **BAROMETER :** ____ mmHg

RANGE OF AMBIENT TEMPS:MIN / MAX 15.5 / 46.7 °C

RELATIVE HUMIDITY: MIN / MAX ____ / ____ %

**UNUSUAL CONDITIONS:**

**UTILITY CONDITIONS :**

| **ELECTRICITY :** | DRIVERS | HEATING | CONTROL | SHUTDOWN |
|---|---|---|---|---|
| VOLTAGE | 6600 | 240 | | |
| PHASE | 3 | 1 | | |
| HERTZ | 50 | 50 | | |

**COOLING WATER :** (Not available) Note 4

| | INLET | RETURN | DESIGN |
|---|---|---|---|
| TEMP °C | | MAX | |
| PRESS. kg/cm²g | | MIN | |

SOURCE

COOLING WATER CHLORIDE CONCENTRATION: ____ ppm

**INSTRUMENT AIR :** MAX ____ kg/cm²g MIN ____ kg/cm²g

**STEAM**

| | | DRIVERS | HEATING |
|---|---|---|---|
| TEMP °C | Max | | |
| | Min | | |
| PRESS. kg/cm²g | Max | | |
| | Min | | |

**PERFORMANCE (Note 9 ,11 & 23)**

| | | |
|---|---|---|
| PROPOSAL CURVE NO. | RPM | |
| As Tested Curve No. | | |
| IMPELLER DIA.: RATED ____ MAX. ____ MIN. | | mm |
| RATED POWER ____ kW EFFICIENCY | | (%) |
| RATED CURVE BEP FLOW (at rated impeller dia) | | m³/h |
| MIN FLOW : THERMAL ____ m³/h STABLE | | m³/h |
| PREFERRED OPERATING REGION (6.1.11) | to | m³/h |
| ALLOWABLE OPERATING REGION | to | m³/h |
| MAX HEAD @ RATED IMPELLER | | m |
| MAX POWER @ RATED IMPELLER (6.8.9) | | kW |
| NPSH3 AT RATED FLOW : | | m |
| CL PUMP TO U/S BASEPLATE | | m |
| NPSH MARGIN AT RATED FLOW : | | m |
| SPECIFIC SPEED (6.1.9) | m3/h, rpm, m | |
| SUCTION SPECIFIC SPEED LIMIT | | |
| SUCTION SPECIFIC SPEED | m3/h, rpm, m | |
| MAX. ALLOW. SOUND PRESS. LEVEL REQD (6.1.14) | 85 | (dBA) |
| EST MAX SOUND PRESS. LEVEL | | (dBA) |
| MAX. SOUND POWER LEVEL REQ'D (6.1.14) | | |
| EST MAX SOUND POWER LEVEL | | |

**DRIVER (7.1.5) (Note 5 & 10)**

| | |
|---|---|
| Driver Type | MOTOR |
| GEAR | |
| VARIABLE SPEED REQUIRED | YES |
| SOURCE OF VARIABLE SPEED | Motor |
| OTHER | VFD |
| MANUFACTURER | |
| NAMEPLATE POWER | ____ kW |
| Nominal RPM | |
| RATED LOAD RPM | |
| FRAME OR MODEL | |
| ORIENTATION | HORIZONTAL |
| LUBE | |
| BEARING TYPE: | |
| RADIAL | / |
| THRUST | / |
| STARTING METHOD | Open Valve (Fully-Loaded) |
| SEE DRIVER DATA SHEET | |

# MECHANICAL DATASHEET FOR MAINLINE PUMP AT VIJAYWADA

| 1 | Note | CONSTRUCTION | Rev |
|---|---|---|---|

**API PUMP TYPE:** *BB3* **[Based on API 610 definitions]**

**NOZZLE CONNECTIONS:** (6.5.5) **(Note 12 & 22)**

| | Size | Facing | Rating | Position |
|---|---|---|---|---|
| SUCTION | | | | *SIDE* |
| DISCHARGE | | | | *SIDE* |

**PRESSURE CASING AUX. CONNECTIONS: (6.4.3.2)**

| | No. | Size | Type | Facing | Rating | Posn. |
|---|---|---|---|---|---|---|
| BALANCE/LEAK OFF | | | | | | |
| DRAIN | | | | | | |
| VENT | | | | | | |
| PRESSURE GAGE | | | | | | |
| TEMP GAGE | | | | | | |
| WARM-UP LINE | | | | | | |

Drain Valve Supplied By: SUPPLIER
DRAINS MANIFOLDED: YES
VENT Valve Supplied By: SUPPLIER
VENTS MANIFOLDED: YES
THREADED CONS FOR PIPELINE SERVICE & < 50°C (6.4.3.2)
SPECIAL FITTINGS FOR TRANSITIONING (6.4.3.3)
CYLINDRICAL THREADS REQUIRED (6.4.3.8)
GUSSET SUPPORT REQUIRED
MACHINED AND STUDDED CONNECTIONS (6.4.3.12)
VS 6 DRAIN: N/A
DRAIN TO SKID EDGE: YES

**MATERIAL (6.12.1.1)**

APPENDIX H CLASS: S-6 **(Note 25)**
MIN DESIGN METAL TEMP (6.12.4.1) °C
REDUCED-HARDNESS MATERIALS REQ'D (6.12.1.12.1)
Applicable Hardness Standard (6.12.1.12.3)
BARREL :
CASE : Killed Carbon Steel (KCS)
DIFFUSERS
IMPELLER :
IMPELLER WEAR RING :
CASE WEAR RING :
SHAFT:
Bowl (if VS-type)
Inspection Class

**BEARINGS AND LUBRICATION (6.10.1.1)**

BEARING (TYPE / NUMBER): (6.11.4)
RADIAL /
THRUST /
REVIEW AND APPROVE THRUST BEARING SIZE : (9.2.5.2.4)

LUBRICATION : (6.10.2.2) (6.11.3) (9.6.1)
PRESSURE LUBE SYSTEM TO ISO 10438- (9.2.6.5)
ISO 10438 DATA SHEETS ATTACHED
Pressurized Lube Oil System mtd on pump baseplate
Location of Pressurized Lube Oil System mounted on baseplate :

INTERCONNECTING PIPING PROVIDED BY

OIL VISC. ISO GRADE VG
CONSTANT LEVEL OILER :

**CASING MOUNTING:** CENTERLINE (C)
**CASING TYPE:** (6.3.10)
OH3 BACKPULLOUT LIFTING DEVICE REQD. (9.1.2.6)

**CASE PRESSURE RATING:**
MAWP : (6.3.6) kg/cm²g @ °C (C)
HYDROTEST : kg/cm²g @ °C (C)

**HYDROTEST OH PUMP AS ASSEMBLY**
SUCT'N PRESS. REGIONS DESIGNED FOR MAWP: YES
**ROTATION:** (VIEWED FROM COUPLING END)
- IMPELLERS INDIVIDUALLY SECURED :
- BOLT OH 3/4/5 PUMP TO PAD / FOUNDATION :
- PROVIDE SOLEPLATE FOR OH 3/4/5 PUMPS

**ROTOR:**
SHAFT FLEXIBILITY INDEX (SFI) (9.1.1.3)
First Critical Speed Wet (Multi stage pumps only)
COMPONENT BALANCE TO ISO 1940 G1.0
SHRINK FIT -LIMITED MOVEMENT IMPELLERS (9.2.2.3)

**COUPLING:(7.2.3)** **(7.2.13.f)**
MANUFACTURER
MODEL
RATING (POWER/100 RPM)
SPACER LENGTH mm
SERVICE FACTOR
RIGID
COUPLING WITH HYDRAULIC FIT (7.2.10)
COUPLING BALANCED TO ISO 1940-1 G6.3 (7.2.3)
COUPLING WITH PROPRIETARY CLAMPING DEVICE (7.2.11)
COUPLING IN COMPLIANCE WITH (7.2.4)
COUPLING GUARD STANDARD PER (7.2.13.a)
Window on Coupling Guard

**BASEPLATE**

API BASEPLATE NUMBER :
BASEPLATE CONSTRUCTION (7.3.14)
BASEPLATE DRAINAGE (7.3.1)
MOUNTING :
NON-GROUT CONSTRUCTION : (7.3.13)
VERTICAL LEVELING SCREWS :
LONGITUDINAL DRIVER POSITIONING SCREWS :
SUPPLIED WITH :
- GROUT AND VENT HOLES
- DRAIN CONNECTION

MOUNTING PADS SIZED FOR BASEPLATE LEVELING (7.3.5)
MOUNTING PADS TO BE MACHINED (7.3.6)
PROVIDE SPACER PLATE UNDER ALL EQUIPMENT FEET
OTHER

**REMARKS :**

# MECHANICAL DATASHEET FOR MAINLINE PUMP AT VIJAYWADA

| 1 | Note | INSTRUMENTATION (Note 13 & 17) | |
|---|---|---|---|
| 2 | | SEE ATTACHED API-670 DATA SHEET | |
| 3 | | ACCELEROMETER (7.4.2.1) | |
| 4 | | Number of Accelerometers | |
| 5 | | Mounting Location of Accelerometers | |
| 6 | | | |
| 7 | | PROVISION FOR MTG ONLY (6.10.2.10) | |
| 8 | | Number of Accelerometers | |
| 9 | | Mounting Location of Accelerometers | |
| 10 | | | |
| 11 | | FLAT SURFACE REQUIRED (6.10.2.11) | |
| 12 | | Number of Accelerometers | |
| 13 | | Mounting Location of Accelerometers | |
| 14 | | | |
| 15 | | VIBRATION PROBES (7.4.2.2) | |
| 16 | | PROVISIONS FOR VIB. PROBES | YES |
| 17 | | NUMBER PER RADIAL BEARING | |
| 18 | | NUMBER PER AXIAL BEARING | TWO |
| | | | |
| 19 | | MONITORS AND CABLES SUPPLIED BY (7.4.2.4) | |
| 20 | | | |
| 21 | | TEMPERATURE (7.4.2.3) | |
| 22 | | PROVISIONS FOR TEMP PROBES | YES |
| 23 | | RADIAL BEARING TEMP. | YES |
| 24 | | NUMBER PER RADIAL BEARING | |
| 25 | | THRUST BEARING TEMP. | YES |
| 26 | | NUMBER PER THRUST BEARING ACTIVE SIDE | |
| 27 | | NUMBER PER THRUST BEARING INACTIVE SIDE | |
| 28 | | TEMP. GAUGES (WITH THERMOWELLS) (9.1.3.6) | |
| 29 | | PRESSURE GAUGE TYPE | |
| 30 | | **Remarks** | |
| 31 | | **1) Vendor to provide temperature and vibration** | |
| 32 | | **monitoring system for Pumps.** | |
| 33 | | **2) Vendor to provide pump casing temperature RTD.** | |

| SEAL SUPPORT SYSTEM MOUNTING | | Rev |
|---|---|---|
| SEAL SUPPORT SYSTEM MOUNTED ON PUMP BASEPLATE (7.5.1.4) | | |
| IDENTIFY LOCATION ON BASEPLATE | | |
| INTERCONNECTING PIPING BY | Supplier | |
| **MECHANICAL SEAL (6.8.1) (Note 20 & 24)** | | |
| SEE ATTACHED ISO 21049/API 682 DATA SHEET | | |
| ADDITIONAL CENTRAL FLUSH PORT (6.8.9) | | |
| HEATING JACKET REQ'D. (6.8.11) | | |
| **HEATING AND COOLING (6.1.17)** | | |
| COOLING REQ'D | | |
| COOLING WATER PIPING PLAN | | |
| COOLING WATER PIPING | | |
| FITTINGS | | |
| COOLING WATER PIPING MATERIALS | | |
| COOLING WATER REQUIREMENTS: | | |
| BEARING HOUSING | m³/h | |
| HEAT EXCHANGER | m³/h | |
| TOTAL COOLING WATER | m³/h | |
| HEATING MEDIUM | | |
| OTHER | | |
| HEATING PIPING | | |
| **PIPING & APPURTENANCES** | | |
| MANIFOLD PIPING FOR PURCHASER CONNECTION (7.5.1.6) | | |
| VENT | YES | |
| DRAIN | YES | |
| COOLING WATER | N / A | |
| TAG ALL ORIFICES (7.5.2.4) | | |
| SOCKET WELD CONN ON SEAL GLAND (7.5.2.8) | | |

# MECHANICAL DATASHEET FOR MAINLINE PUMP AT VIJAYWADA

| 1 | Note | SURFACE PREPARATION AND PAINT | | TEST | | Rev |
|---|---|---|---|---|---|---|
| 2 | | MANUFACTURER'S STANDARD | YES | SHOP INSPECTION (8.1.1) | Yes | |
| 3 | | OTHER (SEE BELOW) | YES | PERFORMANCE CURVE | | |
| 4 | | SPECIFICATION NO. 14495-00-PE-SPC-0005 | | & DATA APPROVAL PRIOR TO SHIPMENT. | YES | |
| 5 | | | | TEST WITH SUBSTITUTE SEAL (8.3.3.2.b) | | |
| 6 | | **PUMP:** | | MATERIAL CERTIFICATION REQUIRED CASING | YES | |
| 7 | | PUMP SURFACE PREPARATION | | (6.12.1.8) IMPELLER | YES | |
| 8 | | PRIMER | | SHAFT | YES | |
| 9 | | FINISH COAT | | OTHER | YES | |
| 10 | | | | CASTING REPAIR WELD PROCEDURE APPR REQD | YES | |
| | | **BASEPLATE:** | | (6.12.2.5) (6.12.3.1) | | |
| 11 | | BASEPLATE SURFACE PREPARATION | | INSPECTION REQUIRED FOR CONNECTION WELDS (6.12.3.4.d) | | |
| 12 | | PRIMER: | | (6.12.3.4.e) MAG PARTICLE | YES | |
| 13 | | FINISH COAT | | RADIOGRAPHY | | |
| 14 | | DETAILS OF LIFTING DEVICES | | LIQUID PENETRANT | YES | |
| 15 | | | | ULTRASONIC | YES | |
| 16 | | **SHIPMENT: (8.4.1)** | | INSPECTION REQUIRED FOR CASTINGS | | |
| 17 | | EXPORT BOXING REQUIRED | YES | MAG PARTICLE | YES | |
| 18 | | OUTDOOR STORAGE MORE THAN 6 MONTHS | YES | RADIOGRAPHY | | |
| | | | | LIQUID PENETRANT | YES | |
| 19 | | **SPARE ROTOR ASSEMBLY PACKAGED FOR:** | | ULTRASONIC | YES | |
| 20 | | ROTOR STORAGE ORIENTATION (9.2.8.2) | | HARDNESS TEST REQUIRED (8.2.2.7) | | |
| 21 | | SHIPPING & STORAGE CONTAINER FOR VERT STORAGE (9.2.8.3) | | ADDNL SUBSURFACE EXAMINATION (6.12.1.5) (8.2.1.3) | | |
| 22 | | | | FOR | | |
| 23 | | N2 PURGE (9.2.8.4) | | METHOD | | |
| 24 | | **SPARE PARTS** | | PMI TESTING REQUIRED (8.2.2.8) | | |
| 25 | | START-UP | | COMPONENTS TO BE TESTED | | |
| 26 | | NORMAL MAINTENANCE | | | | |
| 27 | | **WEIGHTS** kg | | RESIDUAL UNBALANCE TEST (J.4.1.2) | | |
| 28 | | ITEM No / PUMP / DRIVER / GEAR / BASE / TOTAL | | NOTIFICATION OF SUCCESSFUL SHOP | | |
| 29 | | | | PERFORMANCE TEST (8.1.1.c) (8.3.3.5) | | |
| 30 | | | | BASEPLATE TEST (7.3.21) | | |
| 31 | | | | HYDROSTATIC | WIT | |
| 32 | | | | HYDROSTATIC TEST OF BOWLS & COLUMN (9.3.13.2) | | |
| 33 | | **OTHER PURCHASER REQUIREMENTS** | | PERFORMANCE TEST | WIT | |
| 34 | | COORDINATION MEETING REQUIRED (10.1.3) | YES | TEST IN COMPLIANCE WITH (8.3.3.2) | | |
| 35 | | MAXIMUM DISCHARGE PRESSURE TO INCLUDE | | TEST DATA POINTS TO (8.3.3.3) | | |
| 36 | | MAX RELATIVE DENSITY | YES | TEST TOLERANCES TO (8.3.3.4) | | |
| 37 | | OPERATION TO TRIP SPEED | | NPSH (8.3.4.3.1) (8.3.4.3.4) | WIT | |
| 38 | | MAX DIA. IMPELLERS AND/OR NO OF STAGES | | NPSH-1ST STG ONLY (8.3.4.3.2) | | |
| 39 | | CONNECTION DESIGN APPROVAL (9.2.1.4) | | NPSH TESTING TO HI 1.6 OR ISO 9906 (8.3.4.3.3) | | |
| 40 | | TORSIONAL ANALYSIS / REPORT (6.9.2.10) | YES | TEST NPSHA LIMITED TO 110% SITE NPSHA (8.3.3.6) | | |
| 41 | | PROGRESS REPORTS | YES | RETEST ON SEAL LEAKAGE (8.3.3.2.d) | | |
| 42 | | OUTLINE OF PROC FOR OPTIONAL TESTS (10.2.5) | | RETEST REQUIRED AFTER FINAL HEAD ADJ (8.3.3.7.b) | | |
| 43 | | ADDITIONNAL DATA REQUIRING 20 YEARS RETENTION (8.2.1.1) | | COMPLETE UNIT TEST (8.3.4.4.1) | WIT | |
| 44 | | | | SOUND LEVEL TEST (8.3.4.5) | WIT | |
| 45 | | LATERAL ANALYSIS REQUIRED (9.1.3.4) (9.2.4.1.3) | YES | CLEANLINESS PRIOR TO FINAL ASSEMBLY (8.2.2.6) | | |
| 46 | | MODAL ANALYSIS REQUIRED (9.3.9.2) | | LOCATION OF CLEANLINESS INSPECTION | | |
| 47 | | DYNAMIC BALANCE ROTOR (6.9.4.4) | YES | NOZZLE LOAD TEST | | |
| 48 | | INSTALLATION LIST IN PROPOSAL (10.2.3.l) | YES | CHECK FOR CO-PLANAR MOUNTING PAD SURFACES | | |
| 49 | | VFD STEADY STATE DAMPED RESPONSE ANALYSIS (6.9.2.3) | | MECHANICAL RUN TEST UNTIL OIL TEMP STABLE | | |
| 50 | | | | 4 HR. MECH RUN AFTER OIL TEMP STABLE (8.3.4.2.1) | | |
| 51 | | TRANSIENT TORSIONAL RESPONSE (6.9.2.4) | | 4 HR. MECH RUN TEST (8.3.4.2.2) | WIT | |
| 52 | | BEARING LIFE CALCULATIONS REQUIRED (6.10.1.6) | | 2 HR AT MINIMUM CONTINUOUS FLOW | WIT | |
| | | IGNITION HAZARD ASSMT TO EN 13463-1 (7.2.13.e) | | BRG HSG RESONANCE TEST (8.3.4.7) | | |
| 53 | | CASING RETIREMENT THICKNESS DRAWING (10.3.2.3) | | STRUCTURAL RESONANCE TEST (9.3.9.2) | | |
| 54 | | FLANGES RQD IN PLACE OF SKT WELD UNIONS (7.5.2.8) | | REMOVE / INSPECT HYDRODYNAMIC BEARINGS AFTER TEST | | |
| 55 | | INCLUDE PLOTTED VIBRATION SPECTRA (6.9.3.3) | | (9.2.7.5) | | |
| 56 | | CONNECTION BOLTING (7.5.1.7) | | AUXILIARY EQUIPMENT TEST (8.3.4.6) | | |
| 57 | | CADMIUM PLATED BOLTS PROHIBITED | | EQUIPMENT TO BE INCLUDED IN AUXILLIARY TESTS | | |
| 58 | | VENDOR TO KEEP REPAIR AND HT RCDS (8.2.1.1.c) | YES | | | |
| 59 | | VENDOR SUBMIT TEST PROCEDURES (8.3.1.1) | YES | LOCATION OF AUXILIARY EQUIPENT TEST | | |
| 60 | | SUBMIT INSPECTION CHECK LIST (8.1.5) | | | | |
| 61 | | | | IMPACT TEST (6.12.4.3) PER EN 13445 | | |
| 62 | | | | PER ASME SECTION VIII | | |
| | | | | REMOVE CASING AFTER TEST | | |

## NOTES

| Note | | Rev |
|---|---|---|
| 1 | All data in blank fields in this data sheet to be furnished / confirmed by Supplier. | |
| 2 | Pumps shall be able to handle particles below 400 microns. Pump offered by the vendor shall be suitable for a fluid with particle size that may pass through a 40 mesh and 20 mesh during commissioning. | |
| 3 | Rated conditions will be based on operating conditions (temperature 25 deg C) and HSD fluid properties. | |
| 4 | Vendor to note that there is no utility available in the plant. Hence any cooling requirement shall be met by ambient air cooling. | |
| 5 | *Variable Frequency Drive (VFD) shall be provided for capacity control of pumps.*<br>*Pump rated speed is the speed at which rated pump condition is achieved.*<br>*VFD & Motor shall be selected for 110% of pump rated speed.*<br>*Vendor shall provide necessary documentation justifying motor selection along with bid.*<br>*Along with Bid; Vendor to provide pump performance curve for 110% of rated speed.*<br>*Vendor to indicate maximum flow achievable at 110% of pump rated speed & at 100 % rated head. (This point shall be preferably within the region of 80% to 110% of best efficiency flowrate of pump.*<br>*Pump and Pump sub-systems like Mechanical seal, Lube oil system etc. shall be selected to run at 110% of pump rated speed.* | C |
| 6 | Centrifugal type pump shall conform to the requirement of API-610. Selection, operation and maintenance of pump shall be as per OISD-STD-119, 141. | |
| 7 | The products that shall be pumped and their corresponding properties are as follows: | |

| Product | Sp. Gravity at $15^0$ C | Viscosity at $38^0$ C | Viscosity at $20^0$ C | Vapour Pressure at $38^0$ C |
|---|---|---|---|---|
| | - | Cst | Cst | $kg/cm^2a$ |
| -HSD | 0.821 – 0.845 | 2.15 @ 40 ° C | 4.5 | 0.1 |
| - MS | 0.729-0.773 | 0.51 | 0.7 | 0.6 |
| - SKO | 0.790 -0.830 | 1.18 | 1.53 | 0.3 |
| - NAPTHA | 0.6965 | 0.45 | 0.7 | 0.7 |
| - ATF | 0.8105 | 1.18 | 1.53 | 0.3 |

| | | |
|---|---|---|
| 8 | Automatic Minimum Recirculation Valve for each pump shall be provided. Valve shall be selected for pump minimum continuous stable flow. | |
| 9 | The pump performance curves shall be furnished at 200 rpm increments between the minimum and maximum speeds. | |
| 10 | Motor to be designed at end of the curve operation considering VFD operation. | |
| 11 | Design pressure of Vijaywda Pipeline is 88 kg/cm2g. | |
| 12 | Companion flanges, gaskets, nuts & bolts for Pump suction / discharge, ARV, Vent, drain & any other purchaser's interface nozzles alongwith spares speci | |
| 13 | All pump safety requirements, instrumentation,sensors,alarms,trips, etc shall be provided by pump vendor. | |
| 14 | No negative tolerance on flow and head is acceptable. | |
| 15 | Vapour Pressure as conservative approach of 0.7 kg/cm2a of Naptha is considered. | |
| 16 | Vendor to note that, during commissioning, water with specific gravity 1 shall be used as a pumping fluid. Vendor to provide flowrate of water. | |
| 17 | Pump Shall be provided with Vibration Monitoring System (VMS) | |
| 18 | Difference between NPSHA and NPSHR shall be minimum 1.0 m at throughout the range from minimum continuous stable flow up to end of curve. Refer requisition for NPSH test requirement. | |
| 19 | *Deleted* | C |
| 20 | Pumps shall be provided with double mechanical seal. Seal Plan 31, 52 & 65 are required as a minimum. However, Vendor to confirm it with seal supplier. Mechanical seal shall withstand the maximum discharge pressure and the maximum allowable temperature. The pump Vendor shall advise in his Bid of the maximum dynamic and static sealing pressure and temperature. Vendor to submit Seal supplier's recommendation along with bid. | |
| 21 | Pump vendor to provide Position sensors for Pump vent & drain valves. | |
| 22 | 600# rating flange shall be WN RF type and 900# rating flange shall be WN RTJ type | |
| 23 | Vendor to provide performance curves for this pump operation in parallel with existing pumps for all speeds. | |
| 24 | During start-up when upstream and downstream stations are pumping at turn down rate and this pump kicks-in, the suction pressure could be 30-35 kg/cm2g. However, this pressure will be lowered to rated suction pressure value as pump comes online. On shutdown of this pump, pump may experience same pressure (i.e. 30-35 kg/cm2g). Maximum discharge pressure shall be calculated considering this case. Pump mechanical seal shall be suitable for this pressure. | |
| 25 | Casing Material shall be Killed Carbon Steel (KCS), other parts materials shall be as per material class S-6. | |

**CLIENT:** HPCL

**PROJECT TITLE:** CAPACITY AUGUMENTATION OF VISAKHA-VIJAYWADA-SECUNDERABAD PIPELINE (VVSPL) PROJECT

**JOB NUMBER:** 403102-14495

**EQUIPMENT NUMBER:** 40-PA-CF-102A/B

**EQUIPMENT SERVICE:** MS, SKO, ATF, HSD, Naphtha

**SERIAL NUMBER:**

**REQ / SPEC NO. :** 14495-00-ME-REQ-0001

**PURCH ORDER NO.**

Cells coloured thus contain drop-down options

contain calculated values based on input data do not change.

identifies a cross referenced paraghaph in the document
note may also contain a drop down list

**COMMENTS:**

| | DATA SHEETS | | | | | |
|---|---|---|---|---|---|---|
| | ITEM No. | ATT | ITEM No. | ATT | ITEM No. | ATT |
| PUMP | | | | | | |
| MOTOR | | | | | | |
| GEAR | | | | | | |
| TURBINE | | | | | | |

APPLICABLE OVERLAY STANDARDS

| Rev | Date | Description | By | Checked | Approved | | | |
|---|---|---|---|---|---|---|---|---|
| | | | | | | | | |
| | | | | | S.R Halke | | | |
| C | 23.Feb.2017 | RE-ISSUED FOR INFORMATION | KAMY | RANS | HALS | | | |
| B | 13.Feb.2017 | ISSUED FOR INFORMATION | KAMY | RANS | HALS | | | |
| A | 27.Jan.2017 | ISSUED FOR INTER DISCIPLINE CHECK | KAMY | HALS | HALS | | | |

**MECHANICAL DATASHEET FOR MAINLINE PUMPS AT SURYAPET**

DATA SHEET No.

**14495-40-ME-DAS-0001**

# MECHANICAL DATASHEET FOR MAINLINE PUMPS AT SURYAPET

| | Note | | | | Rev |
|---|---|---|---|---|---|
| 1 | | APPLICABLE TO: | PROPOSAL | APPLICABLE NTL/INTNTL STANDARD: API-610 | |
| 2 | | FOR | VVSPL Capacity Aumentation Project | UNIT: Suryapet Pumping Station | |
| 3 | | SITE | Suryapet | SERVICE: Suryapet New Mainline Pumps | |
| 4 | | NO. REQ | 2 (1W + 1S) | PUMP SIZE | TYPE | No. STAGES: * | |
| 5 | | MANUFACTURER | * | MODEL: * | SERIAL NO. | |

**LIQUID CHARACTERISTICS**

| | Units | Maximum | Minimum |
|---|---|---|---|
| LIQUID TYPE OR NAME : | | HSD ( Note 3,6) | |
| VAPOR PRESSURE : | kg/cm2a | 0.7 (Note 15) | |
| RELATIVE DENSITY : | | 0.835 | |
| SPECIFIC HEAT : | kcal/(kg-K) | | |
| VISCOSITY : | cP | Note 7 | |

**OPERATING CONDITIONS (6.1.2)**

| | Units | Maximum | Rated (Note 16) | Normal | Minimum |
|---|---|---|---|---|---|
| NPSHa Datum: | | C.L. Impeller | | | |
| PUMPING TEMPERATURE : | ° C | 50.0 | 25.0 | | 15 |
| FLOW : | m3/hr | | 410.0 | | Note-8 |
| DISCHARGE PRESSURE : (6.3.2) | kg/cm2g | | 63.0 | | |
| SUCTION PRESSURE : | kg/cm2g | 7.4 (Max) (Note 26) | 3.10 | | |
| DIFFERENTIAL PRESSURE : | kg/cm2 | | 59.70 | | |
| DIFFERENTIAL HEAD : | m | | 714.0 | | |
| $NPSH_A$ : | m | | 39 | Note 19 | |
| HYDRAULIC POWER : | kW | | - | | |

| | | |
|---|---|---|
| SERVICE : | CONTINUOUS | |
| PUMPS OPERATE IN: | PARALLEL | |
| CORROSION DUE TO : (6.12.1.9) | NIL | |
| EROSION DUE TO : (6.12.1.9) | NIL | |
| H2S CONCENTRATION (ppm) : (6.12.1.12) | Nil | |
| CHLORIDE CONCENTRATION (ppm) : | Nil | |
| PARTICULATE SIZE (DIA IN MICRONS) | Note 2 | |
| PARTICULATE CONCENTRATION (PPM) | - | |
| CORROSIVE | YES | C |
| EROSIVE | NO | |
| FLAMMABLE | YES | |
| TOXIC | NO | |

**SITE AND UTILITY DATA**

**LOCATION:**

INDOOR | UNHEATED | UNDER ROOF

**MOUNTED AT :** GRADE ❍ TROPICALISATION REQD

**ELECTRIC AREA CLASSIFICATION:** 6.1.22 ZONE 2

GROUP Group IIA | Group IIB TEMP CLASS T3

**SITE DATA :**

**ELEVATION (MSL) :** 174.2 m **BAROMETER :** ____ mmHg

RANGE OF AMBIENT TEMPS:MIN / MAX 10 / 46 °C

RELATIVE HUMIDITY: MIN / MAX ____ / ____ %

**UNUSUAL CONDITIONS:**

**UTILITY CONDITIONS :**

| **ELECTRICITY :** | DRIVERS | HEATING | CONTROL | SHUTDOWN |
|---|---|---|---|---|
| VOLTAGE | 6600 | 240 | | |
| PHASE | 3 | 1 | | |
| HERTZ | 50 | 50 | | |

**COOLING WATER :** (Not available) Note 4

| | INLET | RETURN | DESIGN |
|---|---|---|---|
| TEMP °C | | MAX | |
| PRESS. kg/cm²g | | MIN | |

SOURCE

COOLING WATER CHLORIDE CONCENTRATION: ____ ppm

**INSTRUMENT AIR :** MAX ____ kg/cm²g MIN ____ kg/cm²g

**STEAM**

| | | DRIVERS | HEATING |
|---|---|---|---|
| TEMP °C | Max | | |
| | Min | | |
| PRESS. kg/cm²g | Max | | |
| | Min | | |

**PERFORMANCE (Note 9, 11, 24 & 25)**

| | | | |
|---|---|---|---|
| PROPOSAL CURVE NO. | RPM | | |
| As Tested Curve No. | | | |
| IMPELLER DIA.: RATED | MAX. | MIN. | mm |
| RATED POWER | kW | EFFICIENCY | (%) |
| RATED CURVE BEP FLOW (at rated impeller dia) | | | m³/h |
| MIN FLOW : THERMAL | m³/h | STABLE | m³/h |
| PREFERRED OPERATING REGION (6.1.11) | | to | m³/h |
| ALLOWABLE OPERATING REGION | | to | m³/h |
| MAX HEAD @ RATED IMPELLER | | | m |
| MAX POWER @ RATED IMPELLER | (6.8.9) | | kW |
| NPSH3 AT RATED FLOW : | | | m |
| CL PUMP TO U/S BASEPLATE | | | m |
| NPSH MARGIN AT RATED FLOW : | | | m |
| SPECIFIC SPEED (6.1.9) | | m3/h, rpm, m | |
| SUCTION SPECIFIC SPEED LIMIT | | | |
| SUCTION SPECIFIC SPEED | | m3/h, rpm, m | |
| MAX. ALLOW. SOUND PRESS. LEVEL REQD (6.1.14) | | 85 | (dBA) |
| EST MAX SOUND PRESS. LEVEL | | | (dBA) |
| MAX. SOUND POWER LEVEL REQ'D (6.1.14) | | | |
| EST MAX SOUND POWER LEVEL | | | |

**DRIVER (7.1.5) (Note 5 & 10)**

| | |
|---|---|
| Driver Type | MOTOR |
| GEAR | |
| VARIABLE SPEED REQUIRED | YES |
| SOURCE OF VARIABLE SPEED | Motor |
| OTHER | VFD |
| MANUFACTURER | |
| NAMEPLATE POWER | kW |
| Nominal RPM | |
| RATED LOAD RPM | |
| FRAME OR MODEL | |
| ORIENTATION | HORIZONTAL |
| LUBE | |
| BEARING TYPE: | |
| RADIAL | / |
| THRUST | / |
| STARTING METHOD | Open Valve (Fully-Loaded) |
| SEE DRIVER DATA SHEET | |

# MECHANICAL DATASHEET FOR MAINLINE PUMPS AT SURYAPET

| 1 | Note | CONSTRUCTION | Rev |
|---|---|---|---|

**API PUMP TYPE:** *BB3* **[Based on API 610 definitions]**

**NOZZLE CONNECTIONS:** (6.5.5) Note 12 & 23

| | Size | Facing | Rating | Position |
|---|---|---|---|---|
| SUCTION | | | | *SIDE* |
| DISCHARGE | | | | *SIDE* |

**PRESSURE CASING AUX. CONNECTIONS: (6.4.3.2)**

| | No. | Size | Type | Facing | Rating | Posn. |
|---|---|---|---|---|---|---|
| BALANCE/LEAK OFF | | | | | | |
| DRAIN | | | | | | |
| VENT | | | | | | |
| PRESSURE GAGE | | | | | | |
| TEMP GAGE | | | | | | |
| WARM-UP LINE | | | | | | |

Drain Valve Supplied By: SUPPLIER
DRAINS MANIFOLDED: YES
VENT Valve Supplied By: SUPPLIER
VENTS MANIFOLDED: YES
THREADED CONS FOR PIPELINE SERVICE & < 50°C (6.4.3.2)
SPECIAL FITTINGS FOR TRANSITIONING (6.4.3.3)
CYLINDRICAL THREADS REQUIRED (6.4.3.8)
GUSSET SUPPORT REQUIRED
MACHINED AND STUDDED CONNECTIONS (6.4.3.12)
VS 6 DRAIN: N/A
DRAIN TO SKID EDGE: YES

**MATERIAL (6.12.1.1)**

APPENDIX H CLASS: S-6 (Note 27)
MIN DESIGN METAL TEMP (6.12.4.1) °C
REDUCED-HARDNESS MATERIALS REQ'D (6.12.1.12.1)
Applicable Hardness Standard (6.12.1.12.3)
BARREL :
CASE : Killed Carbon Steel (KCS)
DIFFUSERS
IMPELLER :
IMPELLER WEAR RING :
CASE WEAR RING :
SHAFT:
Bowl (if VS-type)
Inspection Class

**BEARINGS AND LUBRICATION (6.10.1.1)**

BEARING (TYPE / NUMBER): (6.11.4)
RADIAL /
THRUST /
REVIEW AND APPROVE THRUST BEARING SIZE : (9.2.5.2.4)

LUBRICATION : (6.10.2.2) (6.11.3) (9.6.1)
PRESSURE LUBE SYSTEM TO ISO 10438- (9.2.6.5)
ISO 10438 DATA SHEETS ATTACHED
Pressurized Lube Oil System mtd on pump baseplate
Location of Pressurized Lube Oil System mounted on baseplate :

INTERCONNECTING PIPING PROVIDED BY

OIL VISC. ISO GRADE VG
CONSTANT LEVEL OILER :

**CASING MOUNTING:** CENTERLINE (C)
**CASING TYPE:** (6.3.10)
OH3 BACKPULLOUT LIFTING DEVICE REQD. (9.1.2.6)

**CASE PRESSURE RATING:**
MAWP : (6.3.6) kg/cm²g @ °C (C)
HYDROTEST : kg/cm²g @ °C (C)

**HYDROTEST OH PUMP AS ASSEMBLY**
SUCT'N PRESS. REGIONS DESIGNED FOR MAWP: YES
**ROTATION:** (VIEWED FROM COUPLING END)
- IMPELLERS INDIVIDUALLY SECURED :
- BOLT OH 3/4/5 PUMP TO PAD / FOUNDATION :
- PROVIDE SOLEPLATE FOR OH 3/4/5 PUMPS

**ROTOR:**
SHAFT FLEXIBILITY INDEX (SFI) (9.1.1.3)
First Critical Speed Wet (Multi stage pumps only)
COMPONENT BALANCE TO ISO 1940 G1.0
SHRINK FIT -LIMITED MOVEMENT IMPELLERS (9.2.2.3)

**COUPLING:(7.2.3)** **(7.2.13.f)**
MANUFACTURER
MODEL
RATING (POWER/100 RPM)
SPACER LENGTH mm
SERVICE FACTOR
RIGID
COUPLING WITH HYDRAULIC FIT (7.2.10)
COUPLING BALANCED TO ISO 1940-1 G6.3 (7.2.3)
COUPLING WITH PROPRIETARY CLAMPING DEVICE (7.2.11)
COUPLING IN COMPLIANCE WITH (7.2.4)
COUPLING GUARD STANDARD PER (7.2.13.a)
Window on Coupling Guard

**BASEPLATE**

API BASEPLATE NUMBER :
BASEPLATE CONSTRUCTION (7.3.14)
BASEPLATE DRAINAGE (7.3.1)
MOUNTING :
NON-GROUT CONSTRUCTION : (7.3.13)
VERTICAL LEVELING SCREWS :
LONGITUDINAL DRIVER POSITIONING SCREWS :
SUPPLIED WITH :
- GROUT AND VENT HOLES
- DRAIN CONNECTION

MOUNTING PADS SIZED FOR BASEPLATE LEVELING (7.3.5)
MOUNTING PADS TO BE MACHINED (7.3.6)
PROVIDE SPACER PLATE UNDER ALL EQUIPMENT FEET
OTHER

**REMARKS :**

# MECHANICAL DATASHEET FOR MAINLINE PUMPS AT SURYAPET

| 1 | Note | INSTRUMENTATION (Note 13 & 18) | |
|---|---|---|---|
| 2 | | SEE ATTACHED API-670 DATA SHEET | |
| 3 | | ACCELEROMETER (7.4.2.1) | |
| 4 | | Number of Accelerometers | |
| 5 | | Mounting Location of Accelerometers | |
| 6 | | | |
| 7 | | PROVISION FOR MTG ONLY (6.10.2.10) | |
| 8 | | Number of Accelerometers | |
| 9 | | Mounting Location of Accelerometers | |
| 10 | | | |
| 11 | | FLAT SURFACE REQUIRED (6.10.2.11) | |
| 12 | | Number of Accelerometers | |
| 13 | | Mounting Location of Accelerometers | |
| 14 | | | |
| 15 | | VIBRATION PROBES (7.4.2.2) | |
| 16 | | PROVISIONS FOR VIB. PROBES | YES |
| 17 | | NUMBER PER RADIAL BEARING | |
| 18 | | NUMBER PER AXIAL BEARING | TWO |
| | | | |
| 19 | | MONITORS AND CABLES SUPPLIED BY (7.4.2.4) | |
| 20 | | | |
| 21 | | TEMPERATURE (7.4.2.3) | |
| 22 | | PROVISIONS FOR TEMP PROBES | YES |
| 23 | | RADIAL BEARING TEMP. | YES |
| 24 | | NUMBER PER RADIAL BEARING | |
| 25 | | THRUST BEARING TEMP. | YES |
| 26 | | NUMBER PER THRUST BEARING ACTIVE SIDE | |
| 27 | | NUMBER PER THRUST BEARING INACTIVE SIDE | |
| 28 | | TEMP. GAUGES (WITH THERMOWELLS) (9.1.3.6) | |
| 29 | | PRESSURE GAUGE TYPE | |
| 30 | | **Remarks** | |
| 31 | | **1) Vendor to provide temperature and vibration** | |
| 32 | | **monitoring system for Pumps.** | |
| 33 | | **2) Vendor to provide pump casing temperature RTD.** | |
| 34 | | | |
| 35 | | | |
| 36 | | | |
| 37 | | | |
| 38 | | | |
| 39 | | | |
| 40 | | | |
| 41 | | | |
| 42 | | | |
| 43 | | | |
| 44 | | | |
| 45 | | | |
| 46 | | | |
| 47 | | | |
| 48 | | | |
| 49 | | | |
| 50 | | | |
| 51 | | | |
| 52 | | | |
| 53 | | | |
| 54 | | | |
| 55 | | | |
| 56 | | | |
| 57 | | | |
| 58 | | | |
| 59 | | | |
| 60 | | | |
| 61 | | | |
| 62 | | | |
| 63 | | | |
| 64 | | | |
| 65 | | | |

| SEAL SUPPORT SYSTEM MOUNTING | | Rev |
|---|---|---|
| SEAL SUPPORT SYSTEM MOUNTED ON PUMP BASEPLATE (7.5.1.4) | | |
| IDENTIFY LOCATION ON BASEPLATE | | |
| INTERCONNECTING PIPING BY | Supplier | |
| **MECHANICAL SEAL (6.8.1) (Note 21 & 26)** | | |
| SEE ATTACHED ISO 21049/API 682 DATA SHEET | | |
| ADDITIONAL CENTRAL FLUSH PORT (6.8.9) | | |
| HEATING JACKET REQ'D. (6.8.11) | | |
| **HEATING AND COOLING (6.1.17)** | | |
| COOLING REQ'D | | |
| COOLING WATER PIPING PLAN | | |
| COOLING WATER PIPING | | |
| FITTINGS | | |
| COOLING WATER PIPING MATERIALS | | |
| COOLING WATER REQUIREMENTS: | | |
| BEARING HOUSING | m³/h | |
| HEAT EXCHANGER | m³/h | |
| TOTAL COOLING WATER | m³/h | |
| HEATING MEDIUM | | |
| OTHER | | |
| HEATING PIPING | | |
| **PIPING & APPURTENANCES** | | |
| MANIFOLD PIPING FOR PURCHASER CONNECTION (7.5.1.6) | | |
| VENT | YES | |
| DRAIN | YES | |
| COOLING WATER | N / A | |
| TAG ALL ORIFICES (7.5.2.4) | | |
| SOCKET WELD CONN ON SEAL GLAND (7.5.2.8) | | |

# MECHANICAL DATASHEET FOR MAINLINE PUMPS AT SURYAPET

| 1 | Note | SURFACE PREPARATION AND PAINT | | TEST | | Rev |
|---|---|---|---|---|---|---|
| 2 | | MANUFACTURER'S STANDARD | YES | SHOP INSPECTION (8.1.1) | Yes | |
| 3 | | OTHER (SEE BELOW) | YES | PERFORMANCE CURVE | | |
| 4 | | SPECIFICATION NO. 14495-00-PE-SPC-0005 | | & DATA APPROVAL PRIOR TO SHIPMENT. | YES | |
| 5 | | | | TEST WITH SUBSTITUTE SEAL (8.3.3.2.b) | | |
| 6 | | **PUMP:** | | MATERIAL CERTIFICATION REQUIRED CASING | YES | |
| 7 | | PUMP SURFACE PREPARATION | | (6.12.1.8) IMPELLER | YES | |
| 8 | | PRIMER | | SHAFT | YES | |
| 9 | | FINISH COAT | | OTHER | YES | |
| 10 | | | | CASTING REPAIR WELD PROCEDURE APPR REQD | YES | |
| | | **BASEPLATE:** | | (6.12.2.5) (6.12.3.1) | | |
| 11 | | BASEPLATE SURFACE PREPARATION | | INSPECTION REQUIRED FOR CONNECTION WELDS (6.12.3.4.d) | | |
| 12 | | PRIMER: | | (6.12.3.4.e) MAG PARTICLE | YES | |
| 13 | | FINISH COAT | | RADIOGRAPHY | | |
| 14 | | DETAILS OF LIFTING DEVICES | | LIQUID PENETRANT | YES | |
| 15 | | | | ULTRASONIC | YES | |
| 16 | | **SHIPMENT: (8.4.1)** | | INSPECTION REQUIRED FOR CASTINGS | | |
| 17 | | EXPORT BOXING REQUIRED | YES | MAG PARTICLE | YES | |
| 18 | | OUTDOOR STORAGE MORE THAN 6 MONTHS | YES | RADIOGRAPHY | | |
| | | | | LIQUID PENETRANT | YES | |
| 19 | | **SPARE ROTOR ASSEMBLY PACKAGED FOR:** | | ULTRASONIC | YES | |
| 20 | | ROTOR STORAGE ORIENTATION (9.2.8.2) | | HARDNESS TEST REQUIRED (8.2.2.7) | | |
| 21 | | SHIPPING & STORAGE CONTAINER FOR VERT STORAGE (9.2.8.3) | | ADDNL SUBSURFACE EXAMINATION (6.12.1.5) (8.2.1.3) | | |
| 22 | | | | FOR | | |
| 23 | | N2 PURGE (9.2.8.4) | | METHOD | | |
| 24 | | **SPARE PARTS** | | PMI TESTING REQUIRED (8.2.2.8) | | |
| 25 | | START-UP | | COMPONENTS TO BE TESTED | | |
| 26 | | NORMAL MAINTENANCE | | | | |
| 27 | | **WEIGHTS** kg | | RESIDUAL UNBALANCE TEST (J.4.1.2) | | |
| 28 | | ITEM No / PUMP / DRIVER / GEAR / BASE / TOTAL | | NOTIFICATION OF SUCCESSFUL SHOP | | |
| 29 | | | | PERFORMANCE TEST (8.1.1.c) (8.3.3.5) | | |
| 30 | | | | BASEPLATE TEST (7.3.21) | | |
| 31 | | | | HYDROSTATIC | WIT | |
| 32 | | | | HYDROSTATIC TEST OF BOWLS & COLUMN (9.3.13.2) | | |
| 33 | | **OTHER PURCHASER REQUIREMENTS** | | PERFORMANCE TEST | WIT | |
| 34 | | COORDINATION MEETING REQUIRED (10.1.3) | YES | TEST IN COMPLIANCE WITH (8.3.3.2) | | |
| 35 | | MAXIMUM DISCHARGE PRESSURE TO INCLUDE | | TEST DATA POINTS TO (8.3.3.3) | | |
| 36 | | MAX RELATIVE DENSITY | YES | TEST TOLERANCES TO (8.3.3.4) | | |
| 37 | | OPERATION TO TRIP SPEED | | NPSH (8.3.4.3.1) (8.3.4.3.4) | WIT | |
| 38 | | MAX DIA. IMPELLERS AND/OR NO OF STAGES | | NPSH-1ST STG ONLY (8.3.4.3.2) | | |
| 39 | | CONNECTION DESIGN APPROVAL (9.2.1.4) | | NPSH TESTING TO HI 1.6 OR ISO 9906 (8.3.4.3.3) | | |
| 40 | | TORSIONAL ANALYSIS / REPORT (6.9.2.10) | YES | TEST NPSHA LIMITED TO 110% SITE NPSHA (8.3.3.6) | | |
| 41 | | PROGRESS REPORTS | YES | RETEST ON SEAL LEAKAGE (8.3.3.2.d) | | |
| 42 | | OUTLINE OF PROC FOR OPTIONAL TESTS (10.2.5) | | RETEST REQUIRED AFTER FINAL HEAD ADJ (8.3.3.7.b) | | |
| 43 | | ADDITIONNAL DATA REQUIRING 20 YEARS RETENTION (8.2.1.1) | | COMPLETE UNIT TEST (8.3.4.4.1) | WIT | |
| 44 | | | | SOUND LEVEL TEST (8.3.4.5) | WIT | |
| 45 | | LATERAL ANALYSIS REQUIRED (9.1.3.4) (9.2.4.1.3) | YES | CLEANLINESS PRIOR TO FINAL ASSEMBLY (8.2.2.6) | | |
| 46 | | MODAL ANALYSIS REQUIRED (9.3.9.2) | | LOCATION OF CLEANLINESS INSPECTION | | |
| 47 | | DYNAMIC BALANCE ROTOR (6.9.4.4) | YES | NOZZLE LOAD TEST | | |
| 48 | | INSTALLATION LIST IN PROPOSAL (10.2.3.l) | YES | CHECK FOR CO-PLANAR MOUNTING PAD SURFACES | | |
| 49 | | VFD STEADY STATE DAMPED RESPONSE ANALYSIS (6.9.2.3) | | MECHANICAL RUN TEST UNTIL OIL TEMP STABLE | | |
| 50 | | | | 4 HR. MECH RUN AFTER OIL TEMP STABLE (8.3.4.2.1) | | |
| 51 | | TRANSIENT TORSIONAL RESPONSE (6.9.2.4) | | 4 HR. MECH RUN TEST (8.3.4.2.2) | WIT | |
| 52 | | BEARING LIFE CALCULATIONS REQUIRED (6.10.1.6) | | 2 HR AT MINIMUM CONTINUOUS FLOW | WIT | |
| | | IGNITION HAZARD ASSMT TO EN 13463-1 (7.2.13.e) | | BRG HSG RESONANCE TEST (8.3.4.7) | | |
| 53 | | CASING RETIREMENT THICKNESS DRAWING (10.3.2.3) | | STRUCTURAL RESONANCE TEST (9.3.9.2) | | |
| 54 | | FLANGES RQD IN PLACE OF SKT WELD UNIONS (7.5.2.8) | | REMOVE / INSPECT HYDRODYNAMIC BEARINGS AFTER TEST | | |
| 55 | | INCLUDE PLOTTED VIBRATION SPECTRA (6.9.3.3) | | (9.2.7.5) | | |
| 56 | | CONNECTION BOLTING (7.5.1.7) | | AUXILIARY EQUIPMENT TEST (8.3.4.6) | | |
| 57 | | CADMIUM PLATED BOLTS PROHIBITED | | EQUIPMENT TO BE INCLUDED IN AUXILLIARY TESTS | | |
| 58 | | VENDOR TO KEEP REPAIR AND HT RCDS (8.2.1.1.c) | YES | | | |
| 59 | | VENDOR SUBMIT TEST PROCEDURES (8.3.1.1) | YES | LOCATION OF AUXILIARY EQUIPENT TEST | | |
| 60 | | SUBMIT INSPECTION CHECK LIST (8.1.5) | | | | |
| 61 | | | | IMPACT TEST (6.12.4.3) PER EN 13445 | | |
| 62 | | | | PER ASME SECTION VIII | | |
| | | | | REMOVE CASING AFTER TEST | | |

## NOTES

| Note | | Rev |
|---|---|---|
| 1 | All data in blank fields in this data sheet to be furnished / confirmed by Supplier. | |
| 2 | Pumps shall be able to handle particles below 400 microns. Pump offered by the vendor shall be suitable for a fluid with particle size that may pass through a 40 mesh and 20 mesh during commissioning. | |
| 3 | Rated conditions will be based on operating conditions (temperature 25 deg C) and HSD fluid properties. | |
| 4 | Vendor to note that there is no utility available in the plant. Hence any cooling requirement shall be met by ambient air cooling. | |
| 5 | *Variable Frequency Drive (VFD) shall be provided for capacity control of pumps.*<br>*Pump rated speed is the speed at which rated pump condition is achieved.*<br>*VFD & Motor shall be selected for 110% of pump rated speed.*<br>*Vendor shall provide necessary documentation justifying motor selection along with bid.*<br>*Along with Bid; Vendor to provide pump performance curve for 110% of rated speed.*<br>*Vendor to indicate maximum flow achievable at 110% of pump rated speed & at 100 % rated head. (This point shall be preferably within the region of 80% to 110% of best efficiency flowrate of pump.*<br>*Pump and Pump sub-systems like Mechanical seal, Lube oil system etc. shall be selected to run at 110% of pump rated speed.* | C |
| 6 | Centrifugal type pump shall conform to the requirement of API-610. Selection, operation and maintenance of pump shall be as per OISD-STD-119, 141. | |
| 7 | The products that shall be pumped and their corresponding properties are as follows: | |

| Product | Sp. Gravity at $15^0$ C | Viscosity at $38^0$ C | Viscosity at $20^0$ C | Vapour Pressure at $38^0$ C |
|---|---|---|---|---|
| | - | Cst | Cst | $kg/cm^2a$ |
| -HSD | 0.821 – 0.845 | 2.15 @ 40 ° C | 4.5 | 0.1 |
| - MS | 0.729-0.773 | 0.51 | 0.7 | 0.6 |
| - SKO | 0.790 -0.830 | 1.18 | 1.53 | 0.3 |
| - NAPTHA | 0.6965 | 0.45 | 0.7 | 0.7 |
| - ATF | 0.8105 | 1.18 | 1.53 | 0.3 |

| | | |
|---|---|---|
| 8 | Automatic Minimum Recirculation Valve for each pump shall be provided. Valve shall be selected for pump minimum continuous stable flow. | |
| 9 | The pump performance curves shall be furnished at 200 rpm increments between the minimum and maximum speeds. | |
| 10 | Motor to be designed at end of the curve operation considering VFD operation. | |
| 11 | Design pressure of Suryapet Pipeline is 76 kg/cm2g. | |
| 12 | Companion flanges, gaskets, nuts & bolts for Pump suction / discharge, ARV, Vent, drain & any other purchaser's interface nozzles alongwith spares specified in requisition are in vendor's scope. | |
| 13 | All pump safety requirements, instrumentation,sensors,alarms,trips, etc shall be provided by pump vendor. | |
| 14 | No negative tolerance on flow and head is acceptable. | |
| 15 | Vapour Pressure as conservative approach of 0.7 kg/cm2a of Naptha is considered. | |
| 16 | Considering future capacity augmentation, the pump rated capacity will be 410 m3/hr (each). However, in current scenario, pump will operate at lower capacity of 325 m3/hr. Vendor to match following parameters while selecting pump that can be suited for lower capacity of 325 m3/hr. | |

| | Units | Maximum | Capacity | Normal | Minimum |
|---|---|---|---|---|---|
| NPSHa Datum: | | | | | |
| PUMPING TEMPERATURE : | ° c | | **25.0** | | |
| FLOW : | m3/hr | | **325.0** | | |
| DISCHARGE PRESSURE : (6.3.2) | kg/cm2g | | **73.2** | | |
| SUCTION PRESSURE : | kg/cm2g | | **3.50** | | |
| DIFFERENTIAL PRESSURE : | kg/cm2 | | **69.72** | | |
| DIFFERENTIAL HEAD : | m | | **834.7** | | |
| $NPSH_A$ : | m | | **43.9** | | |
| HYDRAULIC POWER : | KW | | **-** | | |

| | | |
|---|---|---|
| 17 | Vendor to note that, during commissioning, water with specific gravity 1 shall be used as a pumping fluid. Vendor to provide flowrate of water. | |
| 18 | Pump Shall be provided with Vibration Monitoring System (VMS) | |
| 19 | Difference between NPSHA and NPSHR shall be minimum 1.0 m at throughout the range from minimum continuous stable flow up to end of curve. Refer requisition for NPSH test requirement. | |
| 20 | *Deleted* | C |
| 21 | Pumps shall be provided with double mechanical seal. Seal Plan 31, 52 & 65 are required as a minimum. However, Vendor to confirm it with seal supplier. Mechanical seal shall withstand the maximum discharge pressure and the maximum allowable temperature. The pump Vendor shall advise in his Bid of the maximum dynamic and static sealing pressure and temperature. Vendor to submit Seal supplier's recommendation along with bid. | |
| 22 | Pump vendor to provide Position sensors for Pump vent & drain valves. | |
| 23 | 600# rating flange shall be WN RF type and 900# rating flange shall be WN RTJ type | |
| 24 | Pumps shall have a head rise from the rated point to shut-off not less than 10% and not greater than 15%. | |
| 25 | Vendor to provide performance curves for this pump operation in parallel with existing pumps for all speeds. | |
| 26 | During start-up when upstream and downstream stations are pumping at turn down rate and this pump kicks-in, the suction pressure could be 30-35 kg/cm2g. However, this pressure will be lowered to rated suction pressure value as pump comes online. On shutdown of this pump, pump may experience same pressure (i.e. 30-35 kg/cm2g). Maximum discharge pressure shall be calculated considering this case. Pump mechanical seal shall be suitable for this pressure. | |
| 27 | Casing Material shall be Killed Carbon Steel (KCS), other parts materials shall be as per material class S-6. | |

# DATA SHEET FOR HIGH VOLTAGE INDUCTION MOTOR

| Rev. | Date | Issue Description | Originated | Checked | Approved | Client |
|---|---|---|---|---|---|---|
| B | 22-Feb-17 | Re-Issued for Information | PARS | DOLV | DOLV | |
| A | 08-Feb-17 | Issued for Information | PARS | DOLV | DOLV | |

WorleyParsons
resources & energy

*HINDUSTAN PETROLEUM CORPORATION LIMITED (HPCL)*
VVSPL CAPACITY AUGMENTATION PROJECT

| | | |
|---|---|---|
| Project No: | 403102-14495 | SHEET |
| Datasheet No: | 14495-00-EL-DAS-0010 | 1 of 6 |

# Data Sheet for High Voltage Induction Motor

| | | | | |
|---|---|---|---|---|
| 1 | **Tag No. :** | As per Annexure-A | **Client:** | Hindustan Petroleum Corporation Limited |
| 2 | **Service:** | As per Annexure-A | **Plant Location:** | As per Annexure-A |
| 3 | **Drg. No. :** | Later | **Manufacturer:** | Later |
| 4 | **Specification Ref. :** | 14495-00-EL-SPC-0009 | **Purchase Order No. :** | Later |
| 5 | **No. of Units:** | As per Annexure-A | | |
| 6 | **Service Description:** | As per Annexure-A | | |

| | SITE CONDITIONS | | | | POWER SYSTEM | | | | |
|---|---|---|---|---|---|---|---|---|---|
| 7 | | | | | | | | | |
| 8 | Location: | Indoor ☐ | Outdoor ■ | | System Voltage: | 6600 | V | ± | 10% |
| 9 | Ambient air temp: | Min: 10 °C | Max: 50 °C | | System Frequency: | 50 | Hz | ± | 5% |
| 10 | Humidity: Later | | Altitude: | < 1000 m | Neutral Earthing: | Resistively Earthed | | | |
| 11 | Hazardous area classification: Zone 2, Gas gp IIA/IIB, Temp. Class T3 | | | | | | | | |

| | PARTICULARS OF EQUIPMENT | UNITS | PURCHASER'S REQUIREMENTS | VENDOR'S RESPONSE |
|---|---|---|---|---|
| 12 | | | | |
| 13 | **GENERAL DATA** | | | |
| 14 | Applicable Standards | | As per Cl. 2 of Specification | |
| 15 | Manufacturer | | VTA | |
| 16 | Model Number | | VTA | |
| 17 | Design site conditions | | See above | |
| 18 | Frame Size | | VTA | |
| 19 | Rated Voltage | V | 6600 | |
| 20 | Rated Frequency | Hz | 50 | |
| 21 | Voltage / Frequency Tolerance | % | ±10 % / ±5 % | |
| 22 | Rated Power | kW | As per Annexure-A (VTA) | |
| 23 | Duty | | $S_1$ | |
| 24 | Service Factor | | 1 | |
| 25 | No of poles | | As per Annexure-A (VTA) | |
| 26 | Synchronous Speed | rpm | As per Annexure-A (VTA) | |
| 27 | No of Phases | | 3 | |
| 28 | Stator Connection | | Star | |
| 29 | Insulation Class | | Class F | |
| 30 | Temperature Rise | | Class B | |
| 31 | Ingress Protection Classification | | IP55 | |
| 32 | Cooling Type | | TEFC (IC411) | |
| 33 | Upstream Fault Protection | | VCB | |
| 34 | VFD Application (Note-5 & 9) | Yes / No | Yes (VFD with DOL bypass) | |
| 35 | | | | |
| 36 | | | | |
| 37 | **PERFORMANCE CHARACTERISTICS** | | | |
| 38 | Full Load Current | A | As per Annexure-A (VTA) | |
| 39 | Full Load Speed | rpm | As per Annexure-A (VTA) | |
| 40 | Efficiency at FL / ¾ FL / ½ FL | pu | As per Annexure-A (VTA) | / / |
| 41 | Power Factor at FL / ¾ FL / ½ FL | pu | As per Annexure-A (VTA) | / / |
| 42 | Full Load Torque | Nm | As per Annexure-A (VTA) | |
| 43 | Breakdown Torque | pu | As per Annexure-A (VTA) | |
| 44 | Pull-up Torque | pu | As per Annexure-A (VTA) | |
| 45 | Combined Torque-Speed Curve Required | Yes / No | Yes | |
| 46 | Thermal Withstand (Hot / Cold) Curve Required | Yes / No | Yes | |
| 47 | Load Vs Efficiency, Power Factor Curve Required | Yes / No | Yes | |
| 48 | Speed Vs Current Curve Required | Yes / No | Yes | |
| 49 | Negative phase sequense current Vs Time Curve Require | Yes / No | Yes | |
| 50 | Speed range for VFD driven motors | | 0-110% of Full load speed B | |

| Rev. | Date | Issue Description | Originated | Checked | Approved | Client |
|---|---|---|---|---|---|---|
| B | 22-Feb-17 | Re-Issued for Information | PARS | DOLV | DOLV | |
| A | 08-Feb-17 | Issued for Information | PARS | DOLV | DOLV | |

**WorleyParsons**
resources & energy

*HINDUSTAN PETROLEUM CORPORATION LIMITED (HPCL)*
VVSPL CAPACITY AUGMENTATION PROJECT

| | | |
|---|---|---|
| Project No: | 403102-14495 | SHEET |
| Datasheet No: | 14495-00-EL-DAS-0010 | 2 of 6 |

# Data Sheet for High Voltage Induction Motor

| | | | | |
|---|---|---|---|---|
| 1 | **Tag No. :** | As per Annexure-A | **Client :** | Hindustan Petroleum Corporation Limited |
| 2 | **Service :** | As per Annexure-A | **Plant Location :** | As per Annexure-A |
| 3 | **Drg. No. :** | Later | **Manufacturer :** | Later |
| 4 | **Specification Ref. :** | 14495-00-EL-SPC-0009 | **Purchase Order No. :** | Later |
| 5 | **No. of Units :** | As per Annexure-A | | |
| 6 | **Service Description :** | As per Annexure-A | | |

| | PARTICULARS OF EQUIPMENT | UNITS | PURCHASER'S REQUIREMENTS | VENDOR'S RESPONSE |
|---|---|---|---|---|
| 8 | **STARTING CHARACTERISTICS** | | | |
| 9 | Starting Method | | DOL (CL. 5.1.2 of Specification) | |
| 10 | Starting Performance | | VTA | |
| 11 | Maximum Allowable Stall Time (Hot / Cold) | s | VTA | / |
| 12 | Thermal time constants (Heating / Cooling) | s | VTA | / |
| 13 | Max. no. of Starts Per Hour | | VTA | |
| 14 | Max. no. of Starts Per Year | | Normal | |
| 15 | Starting Current at Un / 0.8 x Un | pu | VTA (As per Cl. 5.2.3 of Specification) | / |
| 16 | Starting Power Factor at Un / 0.8 x Un | pu | VTA | / |
| 17 | Locked Rotor Torque at Un / 0.8 x Un | pu | VTA | / |
| 18 | Max Run-up Time at Un / 0.8 x Un | s | VTA | / |
| 19 | Starting Current Vs Time Curve Required | Yes / No | Yes | |
| 20 | | | | |
| 21 | | | | |
| 22 | **CONSTRUCTION** | | | |
| 23 | Mounting | | As per Annexure-A (VTA) | |
| 24 | Stator Frame Material | | Cast Iron | |
| 25 | Rotation Facing Drive End | CW/CCW | Bi Directional | |
| 26 | Fan Bi-Directional | Yes / No | Yes | |
| 27 | Fan Cover Ingress Protection | | IP2X | |
| 28 | Colour (Note-7) | | 631 as per IS 5 | |
| 29 | Paint Specification | | As per Cl. 5.12 of Specification | |
| 30 | Motor Inertia | kg $m^2$ | As per Annexure-A (VTA) | |
| 31 | Driven Load Inertia | kg $m^2$ | As per Annexure-A (VTA) | |
| 32 | Coupling Type | | VTA (By Package Supplier) | |
| 33 | Maximum Sound Pressure Level at Full Load | dBA | IS 12065 (Cl 5.7 of Specification) | |
| 34 | Integral Breather / Drain | Yes / No | Yes, IP55 | |
| 35 | DE Bearing Type | | VTA | |
| 36 | DE Bearing Make | | VTA | |
| 37 | No. of DE Bearings | | VTA | |
| 38 | NDE Bearing Type | | VTA | |
| 39 | NDE Bearing Make | | VTA | |
| 40 | No. of NDE Bearings | | VTA | |
| 41 | Bearing Lubrication | | VTA | |
| 42 | Bearing Ingress Protection | | IP55 | |
| 43 | Minimum bearing lifetime, motor only | hr | ≥40000 | |
| 44 | Maximum relubrication interval | hr | VTA | |
| 45 | Max Shaft Voltage | mV rms | 150mV if uninsulated | |
| 46 | Insulated Bearings | Yes / No | Yes | |
| 47 | Bearing Insulation Rating | kV | VTA | |
| 48 | Rotor Axial Float (pos / neg) | mm | VTA | |
| 49 | Vibration at No-load, soft mounted, peak-to-peak | mm/s | <50 | |
| 50 | Critical speed(s) | rpm | As per Cl. 5.9 of Specification | |

| Rev. | Date | Issue Description | Originated | Checked | Approved | Client |
|---|---|---|---|---|---|---|
| B | 22-Feb-17 | Re-Issued for Information | PARS | DOLV | DOLV | |
| A | 08-Feb-17 | Issued for Information | PARS | DOLV | DOLV | |

**WorleyParsons**
resources & energy

*HINDUSTAN PETROLEUM CORPORATION LIMITED (HPCL)*
VVSPL CAPACITY AUGMENTATION PROJECT

| | | |
|---|---|---|
| Project No: | 403102-14495 | SHEET |
| Datasheet No: | 14495-00-EL-DAS-0010 | 3 of 6 |

# Data Sheet for High Voltage Induction Motor

| | | | | |
|---|---|---|---|---|
| 1 | **Tag No. :** | As per Annexure-A | **Client :** | Hindustan Petroleum Corporation Limited |
| 2 | **Service :** | As per Annexure-A | **Plant Location :** | As per Annexure-A |
| 3 | **Drg. No. :** | Later | **Manufacturer :** | Later |
| 4 | **Specification Ref. :** | 14495-00-EL-SPC-0009 | **Purchase Order No. :** | Later |
| 5 | **No. of Units :** | As per Annexure-A | | |
| 6 | **Service Description :** | As per Annexure-A | | |

| 7 | PARTICULARS OF EQUIPMENT | UNITS | PURCHASER'S REQUIREMENTS | VENDOR'S RESPONSE |
|---|---|---|---|---|
| 8 | **CONSTRUCTION** | | | |
| 9 | Maximum Transient Airgap Torque for: | | | |
| 10 | Two-phase short circuit at motor terminal | kNm | VTA | |
| 11 | Three-phase short circuit at motor terminal | kNm | VTA | |
| 12 | Asynchronous Start | kNm | VTA | |
| 13 | Re-start with Full Opposite Residual Voltage | kNm | VTA | |
| 14 | Overall dimensions : L x W x H | mm | As per Annexure-A (VTA) | |
| 15 | Total Weight | kg | As per Annexure-A (VTA) | |
| 16 | Name plates | Yes / No | As per Cl. 5.11 of Specification | |
| 17 | **HAZARDOUS AREA CERTIFICATION** | | | |
| 18 | Protection Type and Classification | | Ex d, Zone 2, Gas gp IIA/IIB, Temp. Class T3 | |
| 19 | Ex e Motor $t_e$ Time | s | N/A | |
| 20 | Certifying Authority | | VTA | |
| 21 | Certification Standard | | VTA | |
| 22 | Certificate Number | | VTA | |
| 23 | Certificate Date | dd/mm/yyyy | VTA | |
| 24 | Certificate includes VFD service? (Note-5) | Yes / No | Yes | |
| 25 | Name plate for VFD driven motors | | As per Cl. 6.4 of Specification | |
| 26 | **ACCESSORIES** | | | |
| 27 | Anti-condensation heater | Yes / No | Yes | |
| 28 | Anti-condensation Heater Power | W | VTA | |
| 29 | Anti-condensation Heater Voltage | V AC | 240 | |
| 30 | Winding Temperature Detectors | Yes / No | Yes (Cl. 5.4 of Specification) | |
| 31 | Bearing Temperature Detectors | Yes / No | Yes (Cl. 5.4 of Specification) | |
| 32 | Frame Earth | | Yes | |
| 33 | Accelerometer Shock-Pulse Measurement Devices | Yes / No | Yes | |
| 34 | Anti-rotational Device | Yes / No | No | |
| 35 | Auxiliary pump/fan motor Power | kW | VTA | |
| 36 | Auxiliary pump/fan motor Voltage | VAC | 415V±10%, 3Ph, 50Hz±5% | |
| 37 | Auxiliary heater Power | kW | VTA | |
| 38 | Auxiliary heater Voltage | V AC | 240V±10%, 1Ph+N, 50Hz±5% | |
| 39 | Control panel Power | kW | VTA | |
| 40 | Control panel Voltage | V AC | 240 | |
| 41 | Lubrication accessories included | Yes / No | VTA | |
| 42 | Cooling accessories included | Yes / No | VTA | |
| 43 | Current transformer required | Yes / No | No | |
| 44 | Current transformer ratio and parameters | | N/A | |
| 45 | Differential Current transformer | Yes / no | Yes (Note-8) | |
| 46 | Differential Current transformer Vk, Rct, Imag | | As per Annexure-A (VTA) | |
| 47 | **CABLE CONNECTIONS** | | | |
| 48 | Ingress Protection of Terminal Boxes | | IP55 | |
| 49 | Main Terminal Box Classification (Ex 'd' / 'e' / 'n') | | Ex d, Zone 2, Gas gp IIA/IIB, Temp. Class T3 | |
| 50 | Power Cable Type | | As per Annexure-A | |
| 51 | Power Cable No. and Size | | As per Annexure-A | |

| Rev. | Date | Issue Description | Originated | Checked | Approved | Client |
|---|---|---|---|---|---|---|
| B | 22-Feb-17 | Re-Issued for Information | PARS | DOLV | DOLV | |
| A | 08-Feb-17 | Issued for Information | PARS | DOLV | DOLV | |

WorleyParsons
resources & energy

*HINDUSTAN PETROLEUM CORPORATION LIMITED (HPCL)*
VVSPL CAPACITY AUGMENTATION PROJECT

| | | |
|---|---|---|
| Project No: | 403102-14495 | SHEET |
| Datasheet No: | 14495-00-EL-DAS-0010 | 4 of 6 |

# Data Sheet for High Voltage Induction Motor

| | | | | |
|---|---|---|---|---|
| 1 | **Tag No. :** | As per Annexure-A | **Client :** | Hindustan Petroleum Corporation Limited |
| 2 | **Service :** | As per Annexure-A | **Plant Location :** | As per Annexure-A |
| 3 | **Drg. No. :** | Later | **Manufacturer :** | Later |
| 4 | **Specification Ref. :** | 14495-00-EL-SPC-0009 | **Purchase Order No. :** | Later |
| 5 | **No. of Units :** | As per Annexure-A | | |
| 6 | **Service Description :** | As per Annexure-A | | |

| | PARTICULARS OF EQUIPMENT | UNITS | PURCHASER'S REQUIREMENTS | VENDOR'S RESPONSE |
|---|---|---|---|---|
| 7 | | | | |
| 8 | **CABLE CONNECTIONS** | | | |
| 9 | Power Cable Gland & Entries | | As per Cable size | |
| 10 | Main Terminal Box Location | | LHS from NDE (180° rotatable) | |
| 11 | Power Cable Enty Direction | | From below | |
| 12 | Main Terminal Box Fault withstand capacity | kA / Sec | 40kA / 0.25 sec | |
| 14 | Neutral Terminal Box Classification (Ex 'd' / 'e' / 'n') | | Ex d, Zone 2, Gas gp IIA/IIB, Temp. Class T3 | |
| 15 | Space Heater Terminal Box Classification (Ex 'd' / 'e' / 'n') | | Ex d, Zone 2, Gas gp IIA/IIB, Temp. Class T3 | |
| 15 | Space Heater Cable Type | | 2XWY | |
| 16 | Space Heater Cable No. and Size | | 3C x 2.5 sq.mm. | |
| 17 | Space Heater Cable Gland & Entries | | As per Cable size | |
| 18 | Aux. Terminal Box Classification (Ex 'd' / 'e' / 'n' / 'i') | | Ex d, Zone 2, Gas gp IIA/IIB, Temp. Class T3 | |
| 19 | Instrument Cable Type | | Triad cable | |
| 20 | Instrument Cable No. and Size | | 8T x 1.5 sq.mm | |
| 21 | Instrument Cable Gland & Entries | | As per Cable size | |
| 22 | | | | |
| 23 | **TEST REQUIREMENTS** | | | |
| 24 | Routine and Acceptance Tests | Yes / No | As per Cl. 6.2 of Specification | |
| 25 | Type Tests | Yes / No | Review of TC's As per Cl. 6.3 of Specification | |
| 26 | Special Tests | Yes / No | No | |
| 27 | Witnessed Test | Yes / No | As per Cl.6.5 of Specification | |
| 28 | Test certificate for Motor and VFD for Hazardous area application | Yes / No | Yes (Note-10) | |
| 29 | | | | |

30 **NOTES:**

31 1. VTA = Vendor to advise, N/A - Not applicable

32 2. Vendor shall provide data / confirmations for all items.

33 3. Vendor shall provide type and special test certificates along with offer.

34 4. Refer to Induction Motor specification 14495-00-EL-SPC-0009 for additional information.

35 5. When VFD service is specified, the motor hazardous area certification shall include the specific VFD make and model to be used with

36 the motor to prove compliance with certification requirements. Minimum and maximum allowable speeds shall be specified.

37 6. All motors to be low-noise design. Motor and driven equipment to meet the noise criteria of the Mechanical equipment specification.

38 7. Motors for fire water system shall be painted Red.

39 8. Differential protection shall be provided for motors rated 1500kW and above or doesnot have standby HV motor. Refer Annexure-A for details.

40 Entire responsibility of providing these CTs at Motors and VFDs shall be borne by package vendor.

41 9. Refer to Cl. 5.14 of Specification for additional information for VFD driven motors.

42 10. Type test report shall be issued for combined test of Job VFD and job motor by recognized independent test house (CMRI/ BASEEFA/ LCIE/

43 UL/FM or equivalent). Entire responsibility of this combined testing including transportation etc. shall be borne by package vendor.

44 11. Startup and commissioning spares shall be provided along with the motor.

45 12. During packing, rotor to be locked to avoid damage of bearing / winding during transportation.

46

47

48

49

50

| Rev. | Date | Issue Description | Originated | Checked | Approved | Client |
|---|---|---|---|---|---|---|
| B | 22-Feb-17 | Re-Issued for Information | PARS | DOLV | DOLV | |
| A | 08-Feb-17 | Issued for Information | PARS | DOLV | DOLV | |

WorleyParsons
resources & energy

*HINDUSTAN PETROLEUM CORPORATION LIMITED (HPCL)*
VVSPL CAPACITY AUGMENTATION PROJECT

| | | |
|---|---|---|
| Project No: | 403102-14495 | SHEET |
| Datasheet No: | 14495-00-EL-DAS-0010 | 5 of 6 |

# Data Sheet for High Voltage Induction Motor

**Annexure-A**

| 1 | | | | | | | | | | | | | | | | | | | | | | | | | | | | | | | |
|---|---|---|---|---|---|---|---|---|---|---|---|---|---|---|---|---|---|---|---|---|---|---|---|---|---|---|---|---|---|---|---|
| 2 | Tag number | Service | Location | Units | Rating | No. of poles | Mounting | Synchronous speed | Full Load Current | Full Load Speed | Efficiency at | | | Power Factor | | | Full Load Torque | Breakdown Torque | Pull-up Torque | Motor inertia | Driven load inertia | Coupling type | Dimensions | Weight | Differential CT | Differential CT | | | Power cable details | | |
| 3 | | | | | (kW) | | | (rpm) | (A) | (rpm) | FL | ¾ FL | ½ FL | FL | ¾ FL | ½ FL | | | | | | | (LxWxH) in mm | (kg) | (Note-8) | Vk | Imag | Rct | Runs | Size | Type |
| 4 | | | | | (By Package vendor) | | | | | | pu | pu | pu | pu | pu | pu | Nm | pu | pu | kg $m^2$ | kg $m^2$ | | | | | (V) | (A) | (Ohms) | | (sq.mm) | |
| 5 | | | | | | VTA | VTA | VTA | VTA | VTA | VTA | VTA | VTA | VTA | VTA | VTA | VTA | VTA | VTA | VTA | VTA | VTA | VTA | VTA | VTA | VTA | VTA | VTA | | | |
| 6 | 10-PM-CF-104A | Motor for Multi Stage Centrifugal Pump | Vizag | 1 | | | | | | | | | | | | | | | | | | | | | Yes | | | | Later | Later | Later |
| 7 | 20-PM-CF-103A | Motor for Multi Stage Centrifugal Pump | Rajahmundry | 1 | | | | | | | | | | | | | | | | | | | | | Yes | | | | Later | Later | Later |
| 8 | 30-PM-CF-101D | Motor for Multi Stage Centrifugal Pump | Vijayawada | 1 | | | | | | | | | | | | | | | | | | | | | No | | | | Later | Later | Later |
| 9 | 30-PM-CF-101A | Motor for Multi Stage Centrifugal Pump | Vijayawada | 0 | N/A | N/A | N/A | N/A | N/A | N/A | N/A | N/A | N/A | N/A | N/A | N/A | N/A | N/A | N/A | N/A | N/A | N/A | N/A | N/A | N/A | N/A | N/A | N/A | N/A | N/A | N/A |
| 10 | 40-PM-CF-102A | Motor for Multi Stage Centrifugal Pump | Suryapet | 1 | | | | | | | | | | | | | | | | | | | | | No | | | | Later | Later | Later |
| 11 | 40-PM-CF-102B | Motor for Multi Stage Centrifugal Pump | Suryapet | 1 | | | | | | | | | | | | | | | | | | | | | No | | | | Later | Later | Later |
| 12 | 15-PM-CF-101A | Motor for Multi Stage Centrifugal Pump | IPS-1 | 1 | | | | | | | | | | | | | | | | | | | | | Yes | | | | Later | Later | Later |
| 13 | 15-PM-CF-101B | Motor for Multi Stage Centrifugal Pump | IPS-1 | 1 | | | | | | | | | | | | | | | | | | | | | Yes | | | | Later | Later | Later |
| 14 | 15-PM-CF-101C | Motor for Multi Stage Centrifugal Pump | IPS-1 | 1 | | | | | | | | | | | | | | | | | | | | | Yes | | | | Later | Later | Later |
| 15 | 25-PM-CF-101A | Motor for Multi Stage Centrifugal Pump | IPS-2 | 1 | | | | | | | | | | | | | | | | | | | | | No | | | | Later | Later | Later |
| 16 | 25-PM-CF-101B | Motor for Multi Stage Centrifugal Pump | IPS-2 | 1 | | | | | | | | | | | | | | | | | | | | | No | | | | Later | Later | Later |
| 17 | 25-PM-CF-101C | Motor for Multi Stage Centrifugal Pump | IPS-2 | 1 | | | | | | | | | | | | | | | | | | | | | No | | | | Later | Later | Later |
| 18 | 45-PM-CF-101A | Motor for Multi Stage Centrifugal Pump | IPS-3 | 1 | | | | | | | | | | | | | | | | | | | | | No | | | | Later | Later | Later |
| 19 | 45-PM-CF-101B | Motor for Multi Stage Centrifugal Pump | IPS-3 | 1 | | | | | | | | | | | | | | | | | | | | | No | | | | Later | Later | Later |
| 20 | | | | | | | | | | | | | | | | | | | | | | | | | | | | | | | |
| 21 | | | | | | | | | | | | | | | | | | | | | | | | | | | | | | | |
| 22 | | | | | | | | | | | | | | | | | | | | | | | | | | | | | | | |
| 23 | | | | | | | | | | | | | | | | | | | | | | | | | | | | | | | |

| Rev. | Date | Issue Description | Originated | Checked | Approved | Client |
|---|---|---|---|---|---|---|
| B | 22-Feb-17 | Re-Issued for Information | PARS | DOLV | DOLV | |
| A | 08-Feb-17 | Issued for Information | PARS | DOLV | DOLV | |

WorleyParsons
resources & energy

HINDUSTAN PETROLEUM CORPORATION LIMITED (HPCL)
VVSPL CAPACITY AUGMENTATION PROJECT

| | | |
|---|---|---|
| Project No: | 403102-14495 | SHEET |
| Datasheet No: | 14495-00-EL-DAS-0010 | 6 of 6 |

# DATA SHEET FOR MEDIUM VOLTAGE INDUCTION MOTOR

| Rev. | Date | Issue Description | Originated | Checked | Approved | Client |
|---|---|---|---|---|---|---|
| A | 08-Feb-17 | Issued for Information | PARS | DOLV | DOLV | |

WorleyParsons
resources & energy

*HINDUSTAN PETROLEUM CORPORATION LIMITED (HPCL)*
VVSPL CAPACITY AUGMENTATION PROJECT

| | | |
|---|---|---|
| Project No: | 403102-14495 | SHEET |
| Datasheet No: | 14495-00-EL-DAS-0011 | 1 of 6 |

# Data Sheet for Medium Voltage Induction Motor

| | | | | |
|---|---|---|---|---|
| 1 | **Tag No. :** | As per Annexure-A (VTA) | **Client:** | Hindustan Petroleum Corporation Limited |
| 2 | **Service:** | As per Annexure-A (VTA) | **Plant Location:** | As per Annexure-A (VTA) |
| 3 | **Drg. No. :** | Later | **Manufacturer:** | Later |
| 4 | **Specification Ref. :** | 14495-00-EL-SPC-0009 | **Purchase Order No. :** | Later |
| 5 | **No. of Units:** | As per Annexure-A (VTA) | | |
| 6 | **Service Description:** | As per Annexure-A (VTA) | | |

| | | | | | | | | |
|---|---|---|---|---|---|---|---|---|
| 7 | SITE CONDITIONS | | | | POWER SYSTEM | | | |
| 8 | Location: | Indoor ☐ | Outdoor ■ | | System Voltage: | 415 | V | ± 10% |
| 9 | Ambient air temp: | Min: 10 °C | Max: 50 °C | | System Frequency: | 50 | Hz | ± 5% |
| 10 | Humidity: Later | | Altitude: | < 1000 m | Neutral Earthing: | Solidly earthed | | |
| 11 | Hazardous area classification: Exd, Zone2, Gas gp IIA/IIB, Temp. Class T3 Or Industrial as per pump datasheet | | | | | | | |

| | PARTICULARS OF EQUIPMENT | UNITS | PURCHASER'S REQUIREMENTS | VENDOR'S RESPONSE |
|---|---|---|---|---|
| 13 | **GENERAL DATA** | | | |
| 14 | Applicable Standards | | As per Cl. 2 of Specification | |
| 15 | Manufacturer | | VTA | |
| 16 | Model Number | | VTA | |
| 17 | Design site conditions | | See above | |
| 18 | Frame Size | | VTA | |
| 19 | Rated Voltage | V | 415 | |
| 20 | Rated Frequency | Hz | 50 | |
| 21 | Voltage / Frequency Tolerance | % | ±10 % / ±5 % | |
| 22 | Rated Power | kW | As per Annexure-A (VTA) | |
| 23 | Duty | | $S_1$ | |
| 24 | Service Factor | | 1 | |
| 25 | No of poles | | As per Annexure-A (VTA) | |
| 26 | Synchronous Speed | rpm | As per Annexure-A (VTA) | |
| 27 | No of Phases | | 3 | |
| 28 | Stator Connection | | As per Cl. 5.3.1 f) of Specification | |
| 29 | Insulation Class | | Class F | |
| 30 | Temperature Rise | | Class B | |
| 31 | Ingress Protection Classification | | IP55 | |
| 32 | Cooling Type | | TEFC (IC411) | |
| 33 | Upstream Fault Protection | | Fuse | |
| 34 | VFD Application (Note-5, 8) | Yes / No | As per Annexure-A (VTA) | |
| 35 | | | | |
| 36 | | | | |
| 37 | **PERFORMANCE CHARACTERISTICS** | | | |
| 38 | Full Load Current | A | VTA | |
| 39 | Full Load Speed | rpm | VTA | |
| 40 | Efficiency at FL / ¾ FL / ½ FL | pu | VTA | / / |
| 41 | Power Factor at FL / ¾ FL / ½ FL | pu | VTA | / / |
| 42 | Full Load Torque | Nm | VTA | |
| 43 | Breakdown Torque | pu | VTA | |
| 44 | Pull-up Torque | pu | VTA | |
| 45 | Combined Torque-Speed Curve Required | Yes / No | Yes | |
| 46 | Thermal Withstand (Hot / Cold) Curve Required | Yes / No | Yes | |
| 47 | Load Vs Efficiency, Power Factor Curve Required | Yes / No | Yes | |
| 48 | Speed Vs Current Curve Required | Yes / No | Yes | |
| 49 | Negative phase sequense current Vs Time Curve Require | Yes / No | Yes | |
| 50 | Speed range for VFD driven motors | | 0-100% of Full load Speed | |

| Rev. | Date | Issue Description | Originated | Checked | Approved | Client |
|---|---|---|---|---|---|---|
| A | 08-Feb-17 | Issued for Information | PARS | DOLV | DOLV | |

WorleyParsons
resources & energy

HINDUSTAN PETROLEUM CORPORATION LIMITED (HPCL)
VVSPL CAPACITY AUGMENTATION PROJECT

| | | |
|---|---|---|
| Project No: | 403102-14495 | SHEET |
| Datasheet No: | 14495-00-EL-DAS-0011 | 2 of 6 |

# Data Sheet for Medium Voltage Induction Motor

| | | | | |
|---|---|---|---|---|
| 1 | **Tag No. :** | As per Annexure-A (VTA) | **Client :** | Hindustan Petroleum Corporation Limited |
| 2 | **Service :** | As per Annexure-A (VTA) | **Plant Location :** | As per Annexure-A (VTA) |
| 3 | **Drg. No. :** | Later | **Manufacturer :** | Later |
| 4 | **Specification Ref. :** | 14495-00-EL-SPC-0009 | **Purchase Order No. :** | Later |
| 5 | **No. of Units :** | As per Annexure-A (VTA) | | |
| 6 | **Service Description :** | As per Annexure-A (VTA) | | |

| 7 | PARTICULARS OF EQUIPMENT | UNITS | PURCHASER'S REQUIREMENTS | VENDOR'S RESPONSE |
|---|---|---|---|---|
| 8 | **STARTING CHARACTERISTICS** | | | |
| 9 | Starting Method | | DOL (CL. 5.1.2 of Specification) | |
| 10 | Starting Performance | | VTA | |
| 11 | Maximum Allowable Stall Time (Hot / Cold) | s | VTA | / |
| 12 | Thermal time constants (Heating / Cooling) | s | VTA | / |
| 13 | Max. no. of Starts Per Hour | | VTA | |
| 14 | Max. no. of Starts Per Year | | Normal | |
| 15 | Starting Current at Un / 0.8 x Un | pu | VTA (As per Cl. 5.2.3 of Specification) | / |
| 16 | Starting Power Factor at Un / 0.8 x Un | pu | VTA | / |
| 17 | Locked Rotor Torque at Un / 0.8 x Un | pu | VTA | / |
| 18 | Max Run-up Time at Un / 0.8 x Un | s | VTA | / |
| 19 | Starting Current Vs Time Curve Required | Yes / No | Yes | |
| 20 | | | | |
| 21 | | | | |
| 22 | **CONSTRUCTION** | | | |
| 23 | Mounting | | As per Annexure-A (VTA) | |
| 24 | Stator Frame Material | | Cast Iron | |
| 25 | Rotation Facing Drive End | CW/CCW | Bi Directional | |
| 26 | Fan Bi-Directional | Yes / No | Yes | |
| 27 | Fan Cover Ingress Protection | | IP2X | |
| 28 | Colour (Note-7) | | 631 as per IS 5 | |
| 29 | Paint Specification | | As per Cl. 5.12 of Specification | |
| 30 | Motor Inertia | kg $m^2$ | As per Annexure-A (VTA) | |
| 31 | Driven Load Inertia | kg $m^2$ | As per Annexure-A (VTA) | |
| 32 | Coupling Type | | VTA (By Package Supplier) | |
| 33 | Maximum Sound Pressure Level at Full Load | dBA | IS 12065 (Cl 5.7 of Specification) | |
| 34 | Integral Breather / Drain | Yes / No | Yes, IP55 | |
| 35 | DE Bearing Type | | VTA | |
| 36 | DE Bearing Make | | VTA | |
| 37 | No. of DE Bearings | | VTA | |
| 38 | NDE Bearing Type | | VTA | |
| 39 | NDE Bearing Make | | VTA | |
| 40 | No. of NDE Bearings | | VTA | |
| 41 | Bearing Lubrication | | VTA | |
| 42 | Bearing Ingress Protection | | IP55 | |
| 43 | Minimum bearing lifetime, motor only | hr | ≥40000 | |
| 44 | Maximum relubrication interval | hr | VTA | |
| 45 | Max Shaft Voltage | mV rms | 150mV if uninsulated | |
| 46 | Insulated Bearings | Yes / No | Yes | |
| 47 | Bearing Insulation Rating | kV | VTA | |
| 48 | Rotor Axial Float (pos / neg) | mm | VTA | |
| 49 | Vibration at No-load, soft mounted, peak-to-peak | mm/s | <50 | |
| 50 | Critical speed(s) | rpm | As per Cl. 5.9 of Specification | |

| Rev. | Date | Issue Description | Originated | Checked | Approved | Client |
|---|---|---|---|---|---|---|
| A | 08-Feb-17 | Issued for Information | PARS | DOLV | DOLV | |

WorleyParsons
resources & energy

*HINDUSTAN PETROLEUM CORPORATION LIMITED (HPCL)*
VVSPL CAPACITY AUGMENTATION PROJECT

| | | |
|---|---|---|
| Project No: | 403102-14495 | SHEET |
| Datasheet No: | 14495-00-EL-DAS-0011 | 3 of 6 |

# Data Sheet for Medium Voltage Induction Motor

| | | | | |
|---|---|---|---|---|
| 1 | **Tag No. :** | As per Annexure-A (VTA) | **Client :** | Hindustan Petroleum Corporation Limited |
| 2 | **Service :** | As per Annexure-A (VTA) | **Plant Location :** | As per Annexure-A (VTA) |
| 3 | **Drg. No. :** | Later | **Manufacturer :** | Later |
| 4 | **Specification Ref. :** | 14495-00-EL-SPC-0009 | **Purchase Order No. :** | Later |
| 5 | **No. of Units :** | As per Annexure-A (VTA) | | |
| 6 | **Service Description :** | As per Annexure-A (VTA) | | |

| 7 | PARTICULARS OF EQUIPMENT | UNITS | PURCHASER'S REQUIREMENTS | VENDOR'S RESPONSE |
|---|---|---|---|---|
| 8 | **CONSTRUCTION** | | | |
| 9 | Maximum Transient Airgap Torque for: | | | |
| 10 | Two-phase short circuit at motor terminal | kNm | VTA | |
| 11 | Three-phase short circuit at motor terminal | kNm | VTA | |
| 12 | Asynchronous Start | kNm | VTA | |
| 13 | Re-start with Full Opposite Residual Voltage | kNm | VTA | |
| 14 | Overall dimensions : L x W x H | mm | As per Annexure-A (VTA) | |
| 15 | Total Weight | kg | As per Annexure-A (VTA) | |
| 16 | Name plates | Yes / No | As per Cl. 5.11 of Specification | |
| 17 | **HAZARDOUS AREA CERTIFICATION** | | | |
| 18 | Protection Type and Classification | | Exd for Zone2, Gas gp IIA/IIB, Temp. Class T3 or Industrial as per pump datasheet | |
| 19 | Ex e Motor $t_e$ Time | s | N/A | |
| 20 | Certifying Authority | | VTA | |
| 21 | Certification Standard | | VTA | |
| 22 | Certificate Number | | VTA | |
| 23 | Certificate Date | dd/mm/yyyy | VTA | |
| 24 | Certificate includes VFD service? (Note-5) | Yes / No | Yes | |
| 25 | Name plate for VFD driven motors | | As per Cl. 6.4 of Specification | |
| 26 | **ACCESSORIES** | | | |
| 27 | Anti-condensation heater | Yes / No | Yes for motors rated above 22kW | |
| 28 | Anti-condensation Heater Power | W | VTA | |
| 29 | Anti-condensation Heater Voltage | V AC | 240 | |
| 30 | Winding Temperature Detectors | Yes / No | Yes for VFD driven motors | |
| 31 | Bearing Temperature Detectors | Yes / No | No | |
| 32 | Frame Earth | | Yes | |
| 33 | Accelerometer Shock-Pulse Measurement Devices | Yes / No | No | |
| 34 | Anti-rotational Device | Yes / No | Yes for fan coolers | |
| 35 | Auxiliary pump/fan motor Power | kW | N/A | |
| 36 | Auxiliary pump/fan motor Voltage | VAC | N/A | |
| 37 | Auxiliary heater Power | kW | VTA | |
| 38 | Auxiliary heater Voltage | V AC | 240V±10%, 1Ph+N, 50Hz±5% | |
| 39 | Control panel Power | kW | N/A | |
| 40 | Control panel Voltage | V AC | N/A | |
| 41 | Lubrication accessories included | Yes / No | N/A | |
| 42 | Cooling accessories included | Yes / No | N/A | |
| 43 | Current transformer required | Yes / No | N/A | |
| 44 | Current transformer ratio and parameters | | N/A | |
| 45 | Differential Current transformer | Yes / no | N/A | |
| 46 | Differential Current transformer Vk, Rct, Imag | | N/A | |
| 47 | **CABLE CONNECTIONS** | | | |
| 48 | Ingress Protection of Terminal Boxes | | IP55 | |
| 49 | Main Terminal Box Classification (Ex 'd' / 'e' / 'n') | | Exd for Zone2, Gas gp IIA/IIB, Temp. Class T3 or Industrial as per pump datasheet | |
| 50 | Power Cable Type | | As per Annexure-A | |
| 51 | Power Cable No. and Size | | As per Annexure-A | |

| Rev. | Date | Issue Description | Originated | Checked | Approved | Client |
|---|---|---|---|---|---|---|
| A | 08-Feb-17 | Issued for Information | PARS | DOLV | DOLV | |

**WorleyParsons**
resources & energy

*HINDUSTAN PETROLEUM CORPORATION LIMITED (HPCL)*
VVSPL CAPACITY AUGMENTATION PROJECT

| | | |
|---|---|---|
| Project No: | 403102-14495 | SHEET |
| Datasheet No: | 14495-00-EL-DAS-0011 | 4 of 6 |

# Data Sheet for Medium Voltage Induction Motor

| | | | | |
|---|---|---|---|---|
| 1 | **Tag No. :** | As per Annexure-A (VTA) | **Client :** | Hindustan Petroleum Corporation Limited |
| 2 | **Service :** | As per Annexure-A (VTA) | **Plant Location :** | As per Annexure-A (VTA) |
| 3 | **Drg. No. :** | Later | **Manufacturer :** | Later |
| 4 | **Specification Ref. :** | 14495-00-EL-SPC-0009 | **Purchase Order No. :** | Later |
| 5 | **No. of Units :** | As per Annexure-A (VTA) | | |
| 6 | **Service Description :** | As per Annexure-A (VTA) | | |

| 7 | PARTICULARS OF EQUIPMENT | UNITS | PURCHASER'S REQUIREMENTS | VENDOR'S RESPONSE |
|---|---|---|---|---|
| 8 | **CABLE CONNECTIONS** | | | |
| 9 | Power Cable Gland & Entries | | As per Cable size | |
| 10 | Main Terminal Box Location | | LHS from NDE (180° rotatable) | |
| 11 | Power Cable Enty Direction | | From below | |
| 12 | Neutral Terminal Box Classification (Ex 'd' / 'e' / 'n') | | N/A | |
| 13 | Space Heater Terminal Box Classification (Ex 'd' / 'e' / 'n') | | Exd for Zone2, Gas gp IIA/IIB, Temp. Class T3 or Industrial as per pump datasheet | |
| 14 | Space Heater Cable Type | | 2XWY | |
| 15 | Space Heater Cable No. and Size | | 3C x 2.5 sq.mm. | |
| 16 | Space Heater Cable Gland & Entries | | As per Cable size | |
| 17 | Aux. Terminal Box Classification (Ex 'd' / 'e' / 'n' / 'i') | (Note-10) | Exd for Zone2, Gas gp IIA/IIB, Temp. Class T3 or Industrial as per pump datasheet | |
| 18 | Instrument Cable Type | | Triad cable | |
| 19 | Instrument Cable No. and Size | | 8T x 1.5 sq.mm | |
| 20 | Instrument Cable Gland & Entries | | As per Cable size | |
| 21 | | | | |
| 22 | **TEST REQUIREMENTS** | | | |
| 23 | Routine and Acceptance Tests | Yes / No | As per Cl. 6.2 of Specification | |
| 24 | Type Tests | Yes / No | Review of TC's As per Cl. 6.3 of Specification | |
| 25 | Special Tests | Yes / No | No | |
| 26 | Witnessed Test | Yes / No | As per Cl.6.5 of Specification | |
| 27 | Test certificate for Motor and VFD for Hazardous area application | Yes / No | Yes (Note-9) | |
| 28 | | | | |

29 **NOTES:**

30 1. VTA = Vendor to advise, N/A - Not applicable

31 2. Vendor shall provide data / confirmations for all items.

32 3. Vendor shall provide type and special test certificates along with offer.

33 4. Refer to Induction Motor specification 14495-00-EL-SPC-0009 for additional information.

34 5. When VFD service is specified, the motor hazardous area certification shall include the specific VFD make and model to be used with

35 the motor to prove compliance with certification requirements. Minimum and maximum allowable speeds shall be specified.

36 6. All motors to be low-noise design. Motor and driven equipment to meet the noise criteria of the Mechanical equipment specification.

37 7. Motors for fire water system shall be painted Red.

38 8. Refer to Cl. 5.14 for additional information for VFD driven motors.

39 9. Type test report shall be issued for combined test of Job VFD and job motor by recognized independent test house (CMRI/ BASEEFA/ LCIE/

40 UL/FM or equivalent). Entire responsibility of this combined testing including transportation etc. shall be borne by package vendor.

41 10. Auxiliary terminal box is applicable only in case of winding RTDs for VFD driven motors.

42 11. Startup and commissioning spares shall be provided along with the motor.

43 12. During packing, rotor to be locked to avoid damage of bearing / winding during transportation.

44

45

46

47

48

49

| Rev. | Date | Issue Description | Originated | Checked | Approved | Client |
|---|---|---|---|---|---|---|
| A | 08-Feb-17 | Issued for Information | PARS | DOLV | DOLV | |

WorleyParsons
resources & energy

*HINDUSTAN PETROLEUM CORPORATION LIMITED (HPCL)*
VVSPL CAPACITY AUGMENTATION PROJECT

| | | |
|---|---|---|
| Project No: | 403102-14495 | SHEET |
| Datasheet No: | 14495-00-EL-DAS-0011 | 5 of 6 |

# Data Sheet for Medium Voltage Induction Motor

Annexure-A

| Tag no. | Description | Location | kW | No of poles | Synchronous speed | Starting | Mounting | Motor inertia | Driven load inertia | Dimesnsions | Weight | Area Classification (for motor, terminal boxes and Glands) | Power cable (Later) |
|---|---|---|---|---|---|---|---|---|---|---|---|---|---|
| | | | | | | | | | | | | | |

| Rev. | Date | Issue Description | Originated | Checked | Approved | Client |
|---|---|---|---|---|---|---|
| A | 08-Feb-17 | Issued for Information | PARS | DOLV | DOLV | |

WorleyParsons
resources & energy

HINDUSTAN PETROLEUM CORPORATION LIMITED (HPCL)
VVSPL CAPACITY AUGMENTATION PROJECT

| | | |
|---|---|---|
| Project No: | 403102-14495 | SHEET |
| Datasheet No: | 14495-00-EL-DAS-0011 | 5 of 6 |

# DATA SHEET FOR HIGH VOLTAGE VARIABLE FREQUENCY DRIVE

| Rev. | Date | Issue Description | Originated | Checked | Approved | Client |
|---|---|---|---|---|---|---|
| B | 22-Feb-17 | Re-Issued for Information | PARS | DOLV | DOLV | |
| A | 08-Feb-17 | Issued for Information | PARS | DOLV | DOLV | |

WorleyParsons
resources & energy

*HINDUSTAN PETROLEUM CORPORATION LIMITED (HPCL)*
VVSPL CAPACITY AUGMENTATION PROJECT

| | | |
|---|---|---|
| Project No: | 403102-14495 | SHEET |
| Datasheet No: | 14495-00-EL-DAS-0012 | 1 of 9 |

# Data Sheet for HV Variable Frequency Drive

| | | | | |
|---|---|---|---|---|
| 1 | **Tag No. :** | As per Annexure-A | **Client:** | Hindustan Petroleum Corporation Limited |
| 2 | **Service:** | As per Annexure-A | **Plant Location:** | As per Annexure-A |
| 3 | **Drg. No. :** | As per Annexure-C | **Manufacturer:** | Later |
| 4 | **Specification Ref. :** | 14495-00-EL-SPC-0010 | **Purchase Order No. :** | Later |
| 5 | **No. of Units:** | As per Annexure-A | | |
| 6 | **Service Description:** | As per Annexure-A | | |

| | SITE CONDITIONS | | POWER SYSTEM | |
|---|---|---|---|---|
| 7 | | | | |
| 8 | Location: Indoor ■ Outdoor ☐ | | System Voltage: | 6600 V ± 10% |
| 9 | Ambient air temp: Min: 10 °C Max: 50 °C | | System Frequency: | 50 Hz ± 5% |
| 10 | Humidity: Later Altitude: < 1000 m | | Neutral Earthing: | Resistively Earthed |
| 11 | Hazardous area classification: Non - hazardous | | | |

| | PARTICULARS OF EQUIPMENT | UNITS | PURCHASER'S REQUIREMENTS | VENDOR'S RESPONSE |
|---|---|---|---|---|
| 12 | | | | |
| 13 | **GENERAL REQUIREMENTS** | | | |
| 14 | Applicable standards | | As per Cl. 2 of Specification | |
| 15 | Manufacturer | | VTA | |
| 16 | Model number | | VTA | |
| 17 | Design site conditions | | See above | |
| 18 | Duty | | Continuous | |
| 19 | Input Isolator (VCU/VCB) (Note-7) | Yes / No | No | |
| 20 | Input earthing switch | | No | |
| 21 | Output Isolator (VCU) | | Yes | |
| 22 | Output earthing switch | | Yes | |
| 23 | Input Line harmonic filters | Yes / No | As Required (VTA) | |
| 24 | Input power factor correction unit | Yes / No | As Required (VTA) | |
| 25 | Input RFI filter | Yes / No | As Required (VTA) | |
| 26 | Output filter (Note-8) | Yes / No | As Required (VTA) | |
| 27 | VFD Bypass (Note-16) | Yes / No | Yes | |
| 28 | Continuous power output | kW | As per Annexure-A (VTA) | |
| 29 | Motor rated power | kW | As per Annexure-A | |
| 30 | Prospective fault level at source | kA | As per Annexure-A (provided by purchaser for reference to VFD manufacturer) | |
| 31 | Upstream feeder size / type | | | |
| 32 | Motor cable size and length | | As per HV Motor Datasheet Doc. No. 14495-00-EL-DAS-0010 (provided by purchaser for reference to VFD manufacturer) | |
| 33 | Applicable single line diagram | | As per Annexure-C | |
| 34 | Technology for each VFD | | Multilevel cascaded H bridge | |
| 35 | Number of Cells & Number of Pulse for each VFD | | 18 cells, 36 pulse | |
| 36 | Starting current of motor limited by VFD (Note-9) | | < 3 times FLA of motor (including tolerance) | |
| 37 | **INPUT / OUTPUT DETAILS** | | | |
| 38 | Input voltage | V AC | 6600 | |
| 39 | Input number of phases | | 3 | |
| 40 | Input frequency | Hz | 50 | |
| 41 | Input voltage tolerance (Nominal) | ± % | 10 | |
| 42 | Input frequency tolerance | ± % | 5 | |
| 43 | Output voltage | V AC | 6600 | |
| 44 | Output number of phases | | 3 | |
| 45 | Output frequency | Hz | 50 | |
| 46 | Output voltage tolerance (Nominal) | ± % | 10 | |
| 47 | Output frequency tolerance | ± % | 5 | |
| 48 | Output system earth | | VTA | |
| 49 | Minimum output short circuit capability | kA | VTA | |
| 50 | | | | |

| Rev. | Date | Issue Description | Originated | Checked | Approved | Client |
|---|---|---|---|---|---|---|
| B | 22-Feb-17 | Re-Issued for Information | PARS | DOLV | DOLV | |
| A | 08-Feb-17 | Issued for Information | PARS | DOLV | DOLV | |

WorleyParsons
resources & energy

*HINDUSTAN PETROLEUM CORPORATION LIMITED (HPCL)*
VVSPL CAPACITY AUGMENTATION PROJECT

| | | |
|---|---|---|
| Project No: | 403102-14495 | SHEET |
| Datasheet No: | 14495-00-EL-DAS-0012 | 2 of 9 |

# Data Sheet for HV Variable Frequency Drive

| | | | | |
|---|---|---|---|---|
| 1 | **Tag No. :** | As per Annexure-A | **Client:** | Hindustan Petroleum Corporation Limited |
| 2 | **Service:** | As per Annexure-A | **Plant Location:** | As per Annexure-A |
| 3 | **Drg. No. :** | As per Annexure-C | **Manufacturer:** | Later |
| 4 | **Specification Ref. :** | 14495-00-EL-SPC-0010 | **Purchase Order No. :** | Later |
| 5 | **No. of Units:** | As per Annexure-A | | |
| 6 | **Service Description:** | As per Annexure-A | | |

| | PARTICULARS OF EQUIPMENT | UNITS | PURCHASER'S REQUIREMENTS | VENDOR'S RESPONSE |
|---|---|---|---|---|
| 7 | | | | |
| 8 | **MOTOR DATA** | | | |
| 9 | Type | | As per HV Motor Datasheet Doc. No. 14495-00-EL-DAS-0010 (provided by purchaser for reference to VFD manufacturer) | |
| 10 | Rated voltage and phases | V AC | | |
| 11 | Rated frequency | Hz | | |
| 12 | Full Load Current | A | | |
| 13 | Full load speed | rpm | | |
| 14 | Speed Range (operational) | rpm | | |
| 15 | Starting Torque (Full Voltage) | Nm | | |
| 16 | Full Load Torque (rated torque) | Nm | | |
| 17 | Location | | | |
| 18 | Hazardous Area Classification | | | |
| 19 | Enclosure Degree of Protection | | | |
| 20 | | | | |
| 21 | **RELIABILITY DATA (Note 5)** | | | |
| 22 | Overall Mean Time Before Failure (MTBF) | hours | As per Cl. 6.12 of Specification | |
| 23 | Overall Mean Time To Repair (MTTR) | hours | As per Cl. 6.12 of Specification | |
| 24 | | | | |
| 25 | **PERFORMANCE** | | | |
| 26 | Rating | kW | As per Annexure-A (VTA) | |
| 27 | Rated input current | A | As per Annexure-A (VTA) | |
| 28 | Rated output current | A | As per Annexure-A (VTA) | |
| 29 | Overall efficiency at 100/75/50% rated load | | VTA | |
| 30 | Input power factor at at 100/75/50% rated load | | greater than 0.95 | |
| 31 | Input total harmonic voltage distortion | % | As per IEEE 519 | |
| 32 | Input total harmonic current distortion | % | As per IEEE 519 | |
| 33 | Maximum Input Current Harmonic Content : | | | |
| 34 | 2nd | % | VTA | |
| 35 | 3rd | % | VTA | |
| 36 | 4th | % | VTA | |
| 37 | 5th | % | VTA | |
| 38 | 7th | % | VTA | |
| 39 | 11th | % | VTA | |
| 40 | 13th | % | VTA | |
| 41 | 17th | % | VTA | |
| 42 | 19th | % | VTA | |
| 43 | Speed Range (Note-10) | rpm | 0-110% with speed set accuracy of ±1% of rated maximum speed | B |
| 44 | Speed regulation (without tachometer) | ±% | 0.5 | |
| 45 | Maximum overload capability and duration | % / min | VTA | |
| 46 | Soft start & Soft stop feature | Yes / No | Yes | |
| 47 | Maximum allowable input voltage unbalance | % | VTA | |
| 48 | Operating mode | | As per Cl. 5.1.3 of Specification, VTA | |
| 49 | Output dV/dt (note-13) | V/µs | VTA | |

| Rev. | Date | Issue Description | Originated | Checked | Approved | Client |
|---|---|---|---|---|---|---|
| B | 22-Feb-17 | Re-Issued for Information | PARS | DOLV | DOLV | |
| A | 08-Feb-17 | Issued for Information | PARS | DOLV | DOLV | |

WorleyParsons
resources & energy

*HINDUSTAN PETROLEUM CORPORATION LIMITED (HPCL)*
VVSPL CAPACITY AUGMENTATION PROJECT

| | | |
|---|---|---|
| Project No: | 403102-14495 | SHEET |
| Datasheet No: | 14495-00-EL-DAS-0012 | 3 of 9 |

# Data Sheet for HV Variable Frequency Drive

| | | | | |
|---|---|---|---|---|
| 1 | **Tag No. :** | As per Annexure-A | **Client:** | Hindustan Petroleum Corporation Limited |
| 2 | **Service:** | As per Annexure-A | **Plant Location:** | As per Annexure-A |
| 3 | **Drg. No. :** | As per Annexure-C | **Manufacturer:** | Later |
| 4 | **Specification Ref. :** | 14495-00-EL-SPC-0010 | **Purchase Order No. :** | Later |
| 5 | **No. of Units:** | As per Annexure-A | | |
| 6 | **Service Description:** | As per Annexure-A | | |

| 7 | PARTICULARS OF EQUIPMENT | UNITS | PURCHASER'S REQUIREMENTS | VENDOR'S RESPONSE |
|---|---|---|---|---|
| 8 | **CONSTRUCTION** | | | |
| 9 | Enclosure material and thickness | | 2 mm thick cold rolled sheet steel | |
| 10 | Base frame material and thickness | | VTA | |
| 11 | Type of mounting | | Floor | |
| 12 | Degree of protection | | IP42 (Minimum) | |
| 13 | Access | Front/Rear | Front | |
| 14 | Minimum required clearances (Top/Sides/Rear) | mm | VTA | |
| 15 | Anti-condensation heaters: Voltage | V | 240VAC (Internal) | |
| 16 | Power consumption | W | VTA | |
| 17 | Exterior paint colour | | RAL 7032 | |
| 18 | Interior paint colour | | VTA | |
| 19 | Paint specification | | As per Cl. 5.9 of Specification | |
| 20 | Cable entry (Top/Bottom) | | Bottom | |
| 21 | Cable type | | Later | |
| 22 | Cable size | $mm^2$ | As per Annexure-A | |
| 23 | Gland plate material and thickness | | VTA | |
| 24 | Heat Loss at 100/75/50% rated load | W | VTA | |
| 25 | Ventilation | | VTA, (if forced, N+1 redundant fan) | |
| 26 | Maximum Sound Pressure Level at 1m | dBA | 85 (as per Cl. 5.6 of Specification) | |
| 27 | Overall dimensions : L x W x H (Note-17) | mm | As per Annexure-A (VTA) | |
| 28 | Largest shipping section dimensions: L x W x H | mm | VTA | |
| 29 | Shipping sections (number and weights) | No./kg | VTA | |
| 30 | Total weight | kg | As per Annexure-A (VTA) | |
| 31 | Name plates | Yes / No | As per Cl. 5.8 of Specification | |
| 32 | Busbar material | | Electrolytic Copper | |
| 33 | Earthing Bus bar | | 50 mm x 6 mm, Copper | |
| 34 | Auxiliary wiring and terminals | | As per Cl. 5.5 of Specification | |
| 35 | **RECTIFIER** | | | |
| 36 | Manufacturer | | VTA | |
| 37 | Model number | | VTA | |
| 38 | Type | | Full wave bridge type / Diode | |
| 39 | Device | V AC | Diode | |
| 40 | Rated input voltage | V AC | 6600 | |
| 41 | Rated input frequency | Hz | 50 | |
| 42 | Number of phases | | 3 | |
| 43 | Rated input current | A | As per Annexure-A (VTA) | |
| 44 | Input inrush current | A | VTA | |
| 45 | Maximum input earth leakage current | A | VTA | |
| 46 | Maximum input current | A | VTA | |
| 47 | Nominal output voltage | VDC | VTA | |
| 48 | Output Voltage Regulation | ± % | VTA | |
| 49 | Maximum output voltage ripple | ± % rms | < 2 | |
| 50 | Rated output current | A | VTA | |
| 51 | Rectifier power efficiency 100%/75%/50% rated output | % | VTA | |

| Rev. | Date | Issue Description | Originated | Checked | Approved | Client |
|---|---|---|---|---|---|---|
| B | 22-Feb-17 | Re-Issued for Information | PARS | DOLV | DOLV | |
| A | 08-Feb-17 | Issued for Information | PARS | DOLV | DOLV | |

**WorleyParsons**
resources & energy

*HINDUSTAN PETROLEUM CORPORATION LIMITED (HPCL)*
VVSPL CAPACITY AUGMENTATION PROJECT

| | | |
|---|---|---|
| Project No: | 403102-14495 | SHEET |
| Datasheet No: | 14495-00-EL-DAS-0012 | 4 of 9 |

# Data Sheet for HV Variable Frequency Drive

| | | | | |
|---|---|---|---|---|
| 1 | **Tag No. :** | As per Annexure-A | **Client:** | Hindustan Petroleum Corporation Limited |
| 2 | **Service:** | As per Annexure-A | **Plant Location:** | As per Annexure-A |
| 3 | **Drg. No. :** | As per Annexure-C | **Manufacturer:** | Later |
| 4 | **Specification Ref. :** | 14495-00-EL-SPC-0010 | **Purchase Order No. :** | Later |
| 5 | **No. of Units:** | As per Annexure-A | | |
| 6 | **Service Description:** | As per Annexure-A | | |

| | PARTICULARS OF EQUIPMENT | UNITS | PURCHASER'S REQUIREMENTS | VENDOR'S RESPONSE |
|---|---|---|---|---|
| 8 | **INVERTER** | | | |
| 9 | Manufacturer | | VTA | |
| 10 | Model number | | VTA | |
| 11 | Type | | PWM type | |
| 12 | Device | | IGBT | |
| 13 | Inverter rating | kVA | As per Annexure-A (VTA) | |
| 14 | Rated input voltage | V DC | VTA | |
| 15 | Input voltage range for rated output | ± % | VTA | |
| 16 | Rated input current | A | As per Annexure-A (VTA) | |
| 17 | Input inrush current | A | VTA | |
| 18 | Nominal output voltage | VAC | 6600 | |
| 19 | Output voltage tolerance | ± % | 10 | |
| 20 | Number of phases | | 3 | |
| 21 | Inverter output voltage setting range | % | VTA | |
| 22 | Nominal output frequency | Hz | 50 | |
| 23 | Output frequency tolerance | ± % | 5 | |
| 24 | Output frequency setting range | % | 0-110% B | |
| 25 | Total Harmonic Distortion of output current (At rated Output) | % | IEC 61800-4 (As per Cl. 5.1.6 of Specification) | |
| 26 | Inverter power efficiency 100%/75%/50% rated output | % | VTA | |
| 27 | | | | |
| 28 | **TRANSFORMER** | | | |
| 29 | Manufacturer | | VTA | |
| 30 | Model number | | VTA | |
| 31 | Type | | Dry | |
| 32 | Duty | | Converter | |
| 33 | Voltage ratio | V | VTA | |
| 34 | Tapping range | | VTA | |
| 35 | Winding connection | | VTA | |
| 36 | Rated power | VA | As per Annexure-A (VTA) | |
| 37 | Rated impedance voltage | % | As per Annexure-A (VTA) | |
| 38 | Number of output phases | | VTA | |
| 39 | Cooling method | | VTA | |
| 40 | Full load losses | kW | As per Annexure-A (VTA) | |
| 41 | Efficiency at 100%/75%/50% rated output | % | VTA | |
| 42 | Mounting | | Inside VFD panel | |
| 43 | | | | |
| 44 | **ISOLATION / BYPASS SWITCHES** | | | |
| 45 | Manufacturer | | VTA | |
| 46 | Model number | | VTA | |
| 47 | Type | | VCU | |
| 48 | Rated voltage | V | 6600 | |
| 49 | No of poles | A | 3 | |
| 50 | Rated continuous current | A | VTA | |

| Rev. | Date | Issue Description | Originated | Checked | Approved | Client |
|---|---|---|---|---|---|---|
| B | 22-Feb-17 | Re-Issued for Information | PARS | DOLV | DOLV | |
| A | 08-Feb-17 | Issued for Information | PARS | DOLV | DOLV | |

WorleyParsons
resources & energy

*HINDUSTAN PETROLEUM CORPORATION LIMITED (HPCL)*
VVSPL CAPACITY AUGMENTATION PROJECT

| | | |
|---|---|---|
| Project No: | 403102-14495 | SHEET |
| Datasheet No: | 14495-00-EL-DAS-0012 | 5 of 9 |

# Data Sheet for HV Variable Frequency Drive

| | | | | |
|---|---|---|---|---|
| 1 | **Tag No. :** | As per Annexure-A | **Client:** | Hindustan Petroleum Corporation Limited |
| 2 | **Service:** | As per Annexure-A | **Plant Location:** | As per Annexure-A |
| 3 | **Drg. No. :** | As per Annexure-C | **Manufacturer:** | Later |
| 4 | **Specification Ref. :** | 14495-00-EL-SPC-0010 | **Purchase Order No. :** | Later |
| 5 | **No. of Units:** | As per Annexure-A | | |
| 6 | **Service Description:** | As per Annexure-A | | |

| | PARTICULARS OF EQUIPMENT | UNITS | PURCHASER'S REQUIREMENTS | VENDOR'S RESPONSE |
|---|---|---|---|---|
| 7 | | | | |
| 8 | **ISOLATION / BYPASS SWITCHES** | | | |
| 9 | Rated short-circuit making capability | kA | VTA | |
| 10 | Rated short-circuit breaking capability | kA | VTA | |
| 11 | Rated short time withstand current (Icw), duration | A, sec | VTA | |
| 12 | Rated power frequency withstand voltage for 1 minute | kV (rms) | VTA | |
| 13 | Rated lightning impulse withstand voltage | kV (peak) | VTA | |
| 14 | Rated Duty | | Continuous | |
| 15 | Operation | | VTA | |
| 16 | Closing / triping coil | Yes / No | VTA | |
| 17 | Utilisation category | | AC-3 | |
| 18 | **SYSTEM AND CONTROL** | | | |
| 19 | Auxiliary supply for VCU / VCB control, indications : Voltag | V | 240V AC, 1-ph, 50Hz (UPS, External) | |
| 20 | Power consumption | W | VTA | |
| 21 | Auxiliary supply for VFD control and indication : Voltage | V | 240V AC, 1-ph, 50Hz (UPS, External) | |
| 22 | Power consumption | W | VTA | |
| 23 | Auxiliary supply for cooling fans : Voltage | V | 415V AC, 3PH+N, 50 Hz (External) | |
| 24 | Power consumption | W | VTA | |
| 25 | Communication with Unit control panel (UCP) (Note-11) | Yes / No | Modbus RTU Protocol on RS 485 & hardwired | |
| 26 | Speed set point from Unit control panel | | 4-20 mA signal | |
| 27 | Interfaces with UCP, LCS, Upstream HT swgr and Motor | | Refer Annexure-B | |
| 28 | Operator control panel & Port for programming | | As per Cl. 7.3 of Specification | |
| 29 | Protection features | | As per Cl. 7.4 of Specification | |
| 30 | Control features | | As per Cl. 7.5 of Specification | |
| 31 | Indications requirements | | As per Cl. 7.6 of Specification | |
| 32 | Metering requirements | | As per Cl. 7.7 of Specification | |
| 33 | Audio-Visual annuciation requirements | | As per Cl. 7.8 of Specification | |
| 34 | **MISCELLANEOUS ITEMS** | | | |
| 35 | Input Line harmonic filters manufacturer and model | | VTA | |
| 36 | Input power factor correction unit manufacturer and model | | VTA | |
| 37 | Input RFI filter manufacturer and model | | VTA | |
| 38 | Output filter manufacturer and model (Note-8) | | VTA | |
| 39 | Meters manufacturer and model | | VTA | |
| 40 | Protection relay manufacturer and model | | VTA | |
| 41 | Indication lamps manufacturer and model | | VTA | |
| 42 | Selector switches manufacturer and model | | VTA | |
| 43 | Pushbuttons manufacturer and model | | VTA | |
| 44 | Timers manufacturer and model | | VTA | |
| 45 | Auxiliary relays manufacturer and model | | VTA | |
| 46 | Auxiliary contactors manufacturer and model | | VTA | |
| 47 | Current transformers manufacturer and model | | VTA | |
| 48 | Voltage transformers manufacturer and model | | VTA | |
| 49 | Motor winding and bearing temperature detector input | Yes / no | No (Note-12) | |
| 50 | Differential Current transformer | Yes / no | Yes (Note-15) | |
| 51 | Differential Current transformer Vk, Rct, Imag | | VTA | |

| Rev. | Date | Issue Description | Originated | Checked | Approved | Client |
|---|---|---|---|---|---|---|
| B | 22-Feb-17 | Re-Issued for Information | PARS | DOLV | DOLV | |
| A | 08-Feb-17 | Issued for Information | PARS | DOLV | DOLV | |

WorleyParsons
resources & energy

*HINDUSTAN PETROLEUM CORPORATION LIMITED (HPCL)*
VVSPL CAPACITY AUGMENTATION PROJECT

| | | |
|---|---|---|
| Project No: | 403102-14495 | SHEET |
| Datasheet No: | 14495-00-EL-DAS-0012 | 6 of 9 |

# Data Sheet for HV Variable Frequency Drive

| | | | | |
|---|---|---|---|---|
| 1 | **Tag No. :** | As per Annexure-A | **Client:** | Hindustan Petroleum Corporation Limited |
| 2 | **Service:** | As per Annexure-A | **Plant Location:** | As per Annexure-A |
| 3 | **Drg. No. :** | As per Annexure-C | **Manufacturer:** | Later |
| 4 | **Specification Ref. :** | 14495-00-EL-SPC-0010 | **Purchase Order No. :** | Later |
| 5 | **No. of Units:** | As per Annexure-A | | |
| 6 | **Service Description:** | As per Annexure-A | | |

| 7 | PARTICULARS OF EQUIPMENT | UNITS | PURCHASER'S REQUIREMENTS | VENDOR'S RESPONSE |
|---|---|---|---|---|
| 8 | **TEST REQUIREMENTS** | | | |
| 9 | Routine and Acceptance Tests | Yes / No | As per Cl. 8.2 of Specification | |
| 10 | Type Tests | Yes / No | Review of TC's As per Cl. 8.3 of Specification | |
| 11 | Special Tests | Yes / No | As per Cl. 8.4 of Specification | |
| 12 | Test certificate for Motor and VFD for Hazardous area application | Yes / No | Yes (Note-14) | |
| 13 | Witnessed Tests | Yes / No | As per Cl. 8.7 & 8.8 of Specification | |

14
15
16
17 **NOTES:**
18 1. VTA = Vendor to advise, N/A - Not applicable
19 2. Vendor shall provide data / confirmations for all items.
20 3. Vendor shall provide type and special test certificates along with offer.
21 4. Refer to variable frequency drive specification 14495-00-EL-SPC-0010 for additional information.
22 5. The methodology used to derive the reliability data (MTBF and MTTR) shall be provided.
23 6. Refer to HV motor data sheet 14495-00-EL-DAS-0010 for further details
24 7. A door interlock shall be provided as per Cl. 5.3.2 of Specification.
25 8. Output filter shall be provided in case the motor length exceeds 1000 mtrs.
26 9. VFD shall have high starting torque, as may be required, for the drive application.
27 10. Each VFD shall have low torque pulsations throughout the lowest and highest frequency range. High input line-side power factor throughout
28 the speed range.
29 11. Refer Annexure-C for typical single line diagram for VFD with bypass for additional information.
30 12. Motor RTDs areconnected to Unit Control panel of package and not to VFD.
31 13. Output dv/dt shall be limited suitably to protect insulation of exisitng motor at Vijayawada.
32 14. Type test report shall be issued for combined test of Job VFD and job motor by recognized independent test house (CMRI/ BASEEFA/ LCIE/
33 UL/FM or equivalent). Entire responsibility of this combined testing including transportation etc. shall be borne by package vendor.
34 15. Differential protection shall be provided for VFDs for motors rated 1500kW and above or doesnot have standby HV motor.
35 Entire responsibility of providing these CTs at Motors and VFDs shall be borne by package vendor.
36 16. VFD shall be provided with DOL bypass. In case of shutdown or maintenance in VFD, the motor shall be started on DOL bypass.
37 VFD shall allow bump less transfer from VFD to DOL mode or from DOL to VFD mode. Refer Annexure-C for details
38 17. Overall dimensions for VFD with DOL byass with VCUs at Vizag, Rajahmundry, Vijaywada and Suryapet shall not exceed dimensions
39 as mentioned in Annexure-A. For details of space availability for new VFDs in existing substations at Vizag, Rajahmundry, Vijaywada and
40 Suryapet locations, refer to Annexure-D.
41
42
43
44
45
46
47
48

| Rev. | Date | Issue Description | Originated | Checked | Approved | Client |
|---|---|---|---|---|---|---|
| B | 22-Feb-17 | Re-Issued for Information | PARS | DOLV | DOLV | |
| A | 08-Feb-17 | Issued for Information | PARS | DOLV | DOLV | |

**WorleyParsons**
resources & energy

*HINDUSTAN PETROLEUM CORPORATION LIMITED (HPCL)*
VVSPL CAPACITY AUGMENTATION PROJECT

| | | |
|---|---|---|
| Project No: | 403102-14495 | SHEET |
| Datasheet No: | 14495-00-EL-DAS-0012 | 7 of 9 |

# Data Sheet for HV Variable Frequency Drive

**Annexure-A**

| | VFD details | | | | | | | | | | | | | | | | | | | Upstream details | |
|---|---|---|---|---|---|---|---|---|---|---|---|---|---|---|---|---|---|---|---|---|---|
| 3 | Tag number | Service | Location | Units | Continuous power output / Rating | Rated input current | Rated output current | Motor rated power | VFD Cable size | DOL Cable size | Dimensions | Weight | Differential protection | Rectifier input current | Inverter rating | Inverter input current | Transfor er rated power | Transfor er rated impedan ce voltage | Transfor er full load losses | Prospective fault level at source | Upstream feeder size / type |
| 4 | | | | | (kW) | (A) | (A) | (kW) | sq.mm | sq.mm | (LxWxH) in mm | (kg) | (Note-15) | (A) | (kVA) | (A) | (kVA) | (%) | (kW) | (kA) | |
| 5 | | | | | VTA | VTA | VTA | (By Package vendor) | | | (Note-17) VTA | VTA | VTA | VTA | VTA | VTA | VTA | VTA | VTA | | |
| 6 | 10-PA-CF-104A-VFD | VFD for Multi Stage Centrifugal Pump | Vizag | 1 | | | | | Later | Later | 8000 x 2000 | | Yes | | | | | | | 21.9kA for 1 sec | VCB |
| 7 | 20-PA-CF-103A-VFD | VFD for Multi Stage Centrifugal Pump | Rajahmundry | 1 | | | | | Later | Later | 8000 x 2000 | | Yes | | | | | | | 21.9kA for 1 sec | VCB |
| 8 | 30-PA-CF-101D - VFD | VFD for Multi Stage Centrifugal Pump | Vijayawada | 1 | | | | | Later | Later | 6500 x 2000 | | No | | | | | | | 21.9kA for 1 sec | VCB |
| 9 | 30-PA-CF-101A-VFD | VFD for **existing** Multi Stage Centrifugal Pump | Vijayawada | 1 | 900 | | | 900 | Later | Later | 6500 x 2000 | | No | | | | | | | 21.9kA for 1 sec | VCB |
| 10 | 40-PA-CF-102A-VFD | VFD for Multi Stage Centrifugal Pump | Suryapet | 1 | | | | | Later | Later | 6500 x 2000 | | No | | | | | | | 21.9kA for 1 sec | VCB |
| 11 | 40-PA-CF-102B-VFD | VFD for Multi Stage Centrifugal Pump | Suryapet | 1 | | | | | Later | Later | 6500 x 2000 | | No | | | | | | | 21.9kA for 1 sec | VCB |
| 12 | 15-PA-CF-101A - VFD | VFD for Multi Stage Centrifugal Pump | IPS-1 | 1 | | | | | Later | Later | | | Yes | | | | | | | Later | Later |
| 13 | 15-PA-CF-101B - VFD | VFD for Multi Stage Centrifugal Pump | IPS-1 | 1 | | | | | Later | Later | | | Yes | | | | | | | Later | Later |
| 14 | 15-PA-CF-101C - VFD | VFD for Multi Stage Centrifugal Pump | IPS-1 | 1 | | | | | Later | Later | | | Yes | | | | | | | Later | Later |
| 15 | 25-PA-CF-101A-VFD | VFD for Multi Stage Centrifugal Pump | IPS-2 | 1 | | | | | Later | Later | | | No | | | | | | | Later | Later |
| 16 | 25-PA-CF-101B-VFD | VFD for Multi Stage Centrifugal Pump | IPS-2 | 1 | | | | | Later | Later | | | No | | | | | | | Later | Later |
| 17 | 25-PA-CF-101C-VFD | VFD for Multi Stage Centrifugal Pump | IPS-2 | 1 | | | | | Later | Later | | | No | | | | | | | Later | Later |
| 18 | 45-PA-CF-101A-VFD | VFD for Multi Stage Centrifugal Pump | IPS-3 | 1 | | | | | Later | Later | | | No | | | | | | | Later | Later |
| 19 | 45-PA-CF-101B-VFD | VFD for Multi Stage Centrifugal Pump | IPS-3 | 1 | | | | | Later | Later | | | No | | | | | | | Later | Later |
| 20 | | | | | | | | | | | | | | | | | | | | | |
| 21 | | | | | | | | | | | | | | | | | | | | | |
| 22 | | | | | | | | | | | | | | | | | | | | | |
| 23 | | | | | | | | | | | | | | | | | | | | | |
| 24 | | | | | | | | | | | | | | | | | | | | | |

| Rev. | Date | Issue Description | Originated | Checked | Approved | Client |
|---|---|---|---|---|---|---|
| B | 22-Feb-17 | Re-Issued for Information | PARS | DOLV | DOLV | |
| A | 08-Feb-17 | Issued for Information | PARS | DOLV | DOLV | |

WorleyParsons
resources & energy

HINDUSTAN PETROLEUM CORPORATION LIMITED (HPCL)
VVSPL CAPACITY AUGMENTATION PROJECT

| | | |
|---|---|---|
| Project No: | 403102-14495 | SHEET |
| Datasheet No: | 14495-00-EL-DAS-0012 | 8 of 9 |

# Data Sheet for HV Variable Frequency Drive

Annexure-B

**Interface with Unit Control Panel** (Note-11)

| Sl No. | Signal Description | Monitoring(M) / Control(C) | Analog(A) / Digital(D) | No of signals | Voltage level | Reamark |
|---|---|---|---|---|---|---|
| 1 | VFD - Running | M | DI | 1 | Potential free contact | |
| 2 | VFD - Stopped | M | DI | 1 | Potential free contact | |
| 3 | VFD - Tripped | M | DI | 1 | Potential free contact | |
| 4 | VFD in Remote mode | M | DI | 1 | Potential free contact | |
| 5 | VFD output power | M | AI | 1 | 4~20mA | |
| 6 | Speed Indication | M | AI | 1 | 4~20mA | |
| 7 | VFD - Start From UCP | C | DO | 1 | Potential free contact | |
| 8 | VFD - Stop From UCP | C | DO | 1 | Potential free contact | |
| 9 | Speed Control From UCP | C | AO | 1 | 4~20mA | |
| 10 | DOL - Running | M | DI | 1 | Potential free contact | |
| 11 | DOL - Stopped | M | DI | 1 | Potential free contact | |
| 12 | DOL - Tripped | M | DI | 1 | Potential free contact | |
| 13 | DOL - Start From UCP | C | DO | 1 | Potential free contact | |
| 14 | DOL - Stop From UCP | C | DO | 1 | Potential free contact | |
| 15 | Motor Stop from ESD | C | DO | 1 | Potential free contact | |
| 15 | Serial link | - | - | 1 | Modbus RTU protocol on RS-485 | |

Notes:

1) AI/AO/DI/DO is indicated w.r.t UCP

2) This is tentative I/O list. The I/O will be confirmed later.

3) Transducers suitable for 4~20 mA communication shall be provide by VFD vendor.

**Interface with Local Control Station** (Note-11)

| Sl No. | Signal Description | Monitoring(M) / Control(C) | Analog(A) / Digital(D) | No of signals | Voltage level |
|---|---|---|---|---|---|
| 1 | VFD - Start From LCS | C | DO | 1 | Potential free contact |
| 2 | VFD - Stop From LCS | C | DO | 1 | Potential free contact |
| 3 | Current indication (Ammeter) | M | AI | 1 | 4~20mA |
| 4 | Drive On indication | - | - | 1 | - |
| 5 | Drive ready to start indication | - | - | 1 | - |

Notes:

1) AI/AO/DI/DO is indicated w.r.t LCS

2) This is tentative I/O list. The I/O will be confirmed later.

3) Transducers suitable for 4~20 mA communication shall be provide by VFD vendor.

**Interface with Upstream HT breaker** (Note-11)

| Sl No. | Signal Description | Monitoring(M) / Control(C) | Analog(A) / Digital(D) | No of signals | Voltage level | Reamark |
|---|---|---|---|---|---|---|
| 1 | Lockout relay operated | C | DO | 1 | Potential free contact | |
| 2 | VFD door open | C | DI | 1 | Potential free contact | |
| 3 | Upstream breaker Close-VFD | M | DO | 1 | Potential free contact | |
| 4 | Upstream breaker Open-VFD | M | DO | 1 | Potential free contact | |
| 5 | Upstream breaker trip-VFD | M | DO | 1 | Potential free contact | |
| 6 | Upstream breaker in service-VFD | M | DO | 1 | Potential free contact | |
| 7 | Upstream breaker in disconnect-VFD | M | DO | 1 | Potential free contact | |
| 8 | Lockout relay operated | C | DI | 1 | Potential free contact | |
| 9 | Upstream breaker Close- DOL | M | DO | 1 | Potential free contact | |
| 10 | Upstream breaker Open-DOL | M | DO | 1 | Potential free contact | |
| 11 | Upstream breaker trip-DOL | M | DO | 1 | Potential free contact | |
| 12 | Upstream breaker in service-DOL | M | DO | 1 | Potential free contact | |
| 13 | Upstream breaker in disconnect-DOL | M | DO | 1 | Potential free contact | |
| 14 | Lockout relay operated | C | DI | 1 | Potential free contact | |

Notes:

1) AI/AO/DI/DO is indicated w.r.t upstream HT switchgear

2) This is tentative I/O list. The I/O will be confirmed later.

**Interface with Motor** (Note-11)

| Sl No. | Signal Description | Monitoring(M) / Control(C) | Analog(A) / Digital(D) | No of signals | Voltage level | Reamark |
|---|---|---|---|---|---|---|
| 1 | Differential CT input | - | - | 1 | - | As applicable |
| 2 | Motor Space heater | C | - | 1 | 240V AC | |

Notes:

1) AI/AO/DI/DO is indicated w.r.t Motor

2) This is tentative I/O list. The I/O will be confirmed later.

3) Winding and bearing RTDs of motor shall be connected to UCP.

| Rev. | Date | Issue Description | Originated | Checked | Approved | Client |
|---|---|---|---|---|---|---|
| B | 22-Feb-17 | Re-Issued for Information | PARS | DOLV | DOLV | |
| A | 08-Feb-17 | Issued for Information | PARS | DOLV | DOLV | |

WorleyParsons
resources & energy

HINDUSTAN PETROLEUM CORPORATION LIMITED (HPCL)
VVSPL CAPACITY AUGMENTATION PROJECT

| | | |
|---|---|---|
| Project No: | 403102-14495 | SHEET |
| Datasheet No: | 14495-00-EL-DAS-0012 | 9 of 9 |

# ANNEXURE-C TO HV VFD DATASHEET (DOC. NO. 14495-00-EL-DAS-0012): TYPICAL SINGLE LINE DIAGRAM FOR VFD WITH BYPASS

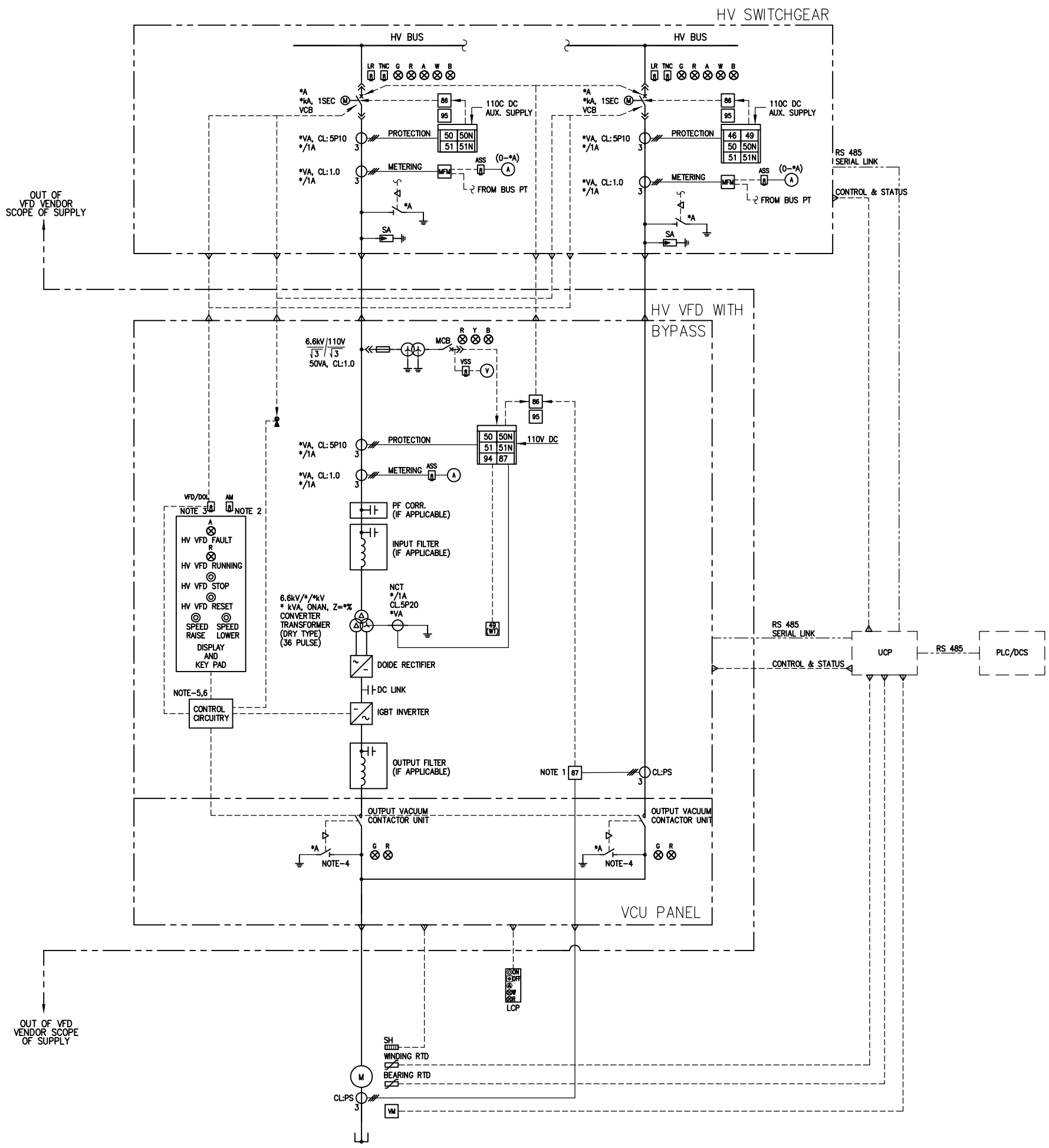


## NOTES:

1. DETAILS OF DIFFERENTIAL PROTECTION CT SHALL BE PROVIDED BASED ON VENDOR'S RECOMMENDATION. DIFFERENTIAL PROTECTION IS APPLICABLE FOR MOTOR RATED 1500KW AND ABOVE OR DOES NOT HAVE STANDBY HV MOTOR.
2. IT SHALL BE POSSIBLE TO VARY THE SPEED OF THE VARIABLE FREQUENCY DRIVE MOTOR IN EITHER MANUAL OR AUTO MODE. AUTO/MANUAL SELECTION SHALL BE FROM VARIABLE FREQUENCY DRIVE PANEL UNLESS OTHERWISE SPECIFIED.
   a. WITH THE SELECTOR SWITCH IN "MANUAL" MODE, THE OPERATOR SHALL BE ABLE TO START, STOP AND SET THE SPEED THROUGH KEYPAD, MOUNTED ON FRONT OF THE VARIABLE FREQUENCY DRIVE OR START AND STOP FROM THE FIELD (LOCAL CONTROL STATION). MOTOR OPERATED POTENTIOMETER SHALL BE PROVIDED AS A SPEED SET POINT DEVICE.
   b. WITH THE SELECTOR SWITCH IN "AUTO" MODE, START, STOP AND SPEED SETTING SHALL BE FROM UNIT CONTROL PANEL (UCP) OF PACKAGE. THE SPEED SETTING SHALL BE THROUGH A 4-20 mA SIGNAL. NECESSARY EQUIPMENT REQUIRED FOR INTERFACING WITH UCP SHALL ALSO BE PROVIDED IN THE DRIVE PANEL. PROVISION SHALL ALSO BE MADE FOR DRIVE COMMUNICATION WITH PLC/DCS OVER MODBUS RTU PROTOCOL ON RS-485.
3. IT SHALL BE POSSIBLE TO START THE MOTOR IN VFD OR DOL MODE. A SELECTOR SWITCH SHALL BE PROVIDED TO SELECT STARTING MODE MANUALLY.
   a. WITH THE SELECTOR SWITCH IN "VFD" MODE, THE OPERATOR SHALL BE ABLE TO START THE MOTOR FROM VARIABLE FREQUENCY DRIVE. FURTHER OPERATION OF DRIVE SHALL BE SELECTED FROM A/M SWITCH.
   b. WITH THE SELECTOR SWITCH IN "DOL" MODE, THE OPERATOR SHALL BE ABLE TO START THE MOTOR DIRECT ON LINE.
4. IT SHALL BE POSSIBLE TO CLOSE EARTH SWITCH OF CONTACTOR ONLY WHEN UPSTREAM BREAKERS OF BOTH VFD AND DOL MODE ARE OPEN AND DISCONNECTED POSITION.
5. VFD SHALL BE SUITABLE FOR CLOSED TRANSITION I.E. MAKE BEFORE BREAK. ALSO SPACE HEATER FOR MOTOR SHALL BE OFF WHEN MOTOR IS RUNNING IN VFD MODE OR DOL MODE.
5. VFD SHALL BE SUITABLE FOR CLOSED TRANSITION I.E. MAKE BEFORE BREAK. ALSO SPACE HEATER FOR MOTOR SHALL BE OFF WHEN MOTOR IS RUNNING IN VFD MODE OR DOL MODE.
6. VFD SHALL PROVIDE BUMP LESS TRANSFER FROM VFD MODE TO DOL MODE OR VICE VERSA.
7. FOR ITEMS MARKED '*' INSIDE VFD PANEL, VFD VENDOR TO ADVICE THE DETAILS.

## LEGEND:

| | |
|---|---|
| R | INDICATION LAMP<br>R (RED) – CIRCUIT BREAKER/ CONTACTOR 'ON'<br>G (GREEN) – CIRCUIT BREAKER/ CONTACTOR 'OFF'<br>A (AMBER) – CIRCUIT BREAKER/ CONTACTOR 'TRIP'<br>W (WHITE) – TRIP CIRCUIT HEALTHY<br>B (BLUE) – SPRING CHARGED<br>W1 (WHITE) – SYNCH PERMISSIVE |
| ASS | AMMETER SELECTOR SWITCH (FOUR POSITION– 0,R,Y,B) |
| AM | AUTO/ MANUAL SELECTOR SWITCH (TWO POSITION) |
| VFD/DOL | VFD = VFD MODE<br>DOL = DOL MODE |
| LR | LOCAL/ REMOTE SELECTOR SWITCH (TWO POSITION) |
| TNC | TRIP/ NEUTRAL/ CLOSE SELECTOR SWITCH (THREE POSITION), WITH SPRING RETURN TO NEUTRAL POSITION |
| | PUSH BUTTON |
| | INTERLOCK (MECHANICAL) |
| | CURRENT TRANSFORMER |
| | LOCAL CONTROL STATION WITH AMMETER, START, STOP, PUSH BUTTONS & INDICATIONS<br>ON : MOTOR READY TO START<br>OR : MOTOR ON |
| | 2 WINDING VOLTAGE TRANSFORMER (PT) |
| | 3 WINDING VOLTAGE TRANSFORMER |
| A | AMMETER |
| V | VOLTMETER |
| MFM | MULTI FUNCTION METER |
| 46 | NEGATIVE PHASE SEQUENCE CURRENT RELAY |
| 49 | THERMAL OVERLOAD RELAY |
| 49 (WT) | WINDING TEMPERATURE DEVICE WITH ALARM & TRIP CONTACTS |
| 50 | INSTANTANEOUS OVER CURRENT RELAY |
| 50N | INSTANTANEOUS EARTH FAULT RELAY (RESIDUAL CONNECTION) |
| 51 | IDMT OVER CURRENT RELAY |
| 51N | IDMT EARTH FAULT RELAY (RESIDUAL CONNECTION) |
| 86 | TRIP LOCKOUT RELAY (MANUAL RESET) |
| 87 | DIFFERENTIAL PROTECTION RELAY |
| 94 | TRIPPING OR TRIP-FREE RELAY (INTER TRIP) |
| 95 | AUXILIARY RELAY |
| | ISOLATOR/ EARTH SWITCH |
| M | CIRCUIT BREAKER (MOTORISED) |
| | RESISTANCE TEMPERATURE DETECTOR |
| | SPACE HEATER |
| VM | MOTOR VIBRATION MONITORING |
| | SURGE ARRESTOR (SA) |
| | DRAWOUT |
| | DOOR INTERLOCK |

Annexure-D : Space availability for new VFD in existing substation at Vizag
(Pg 1 of 4)

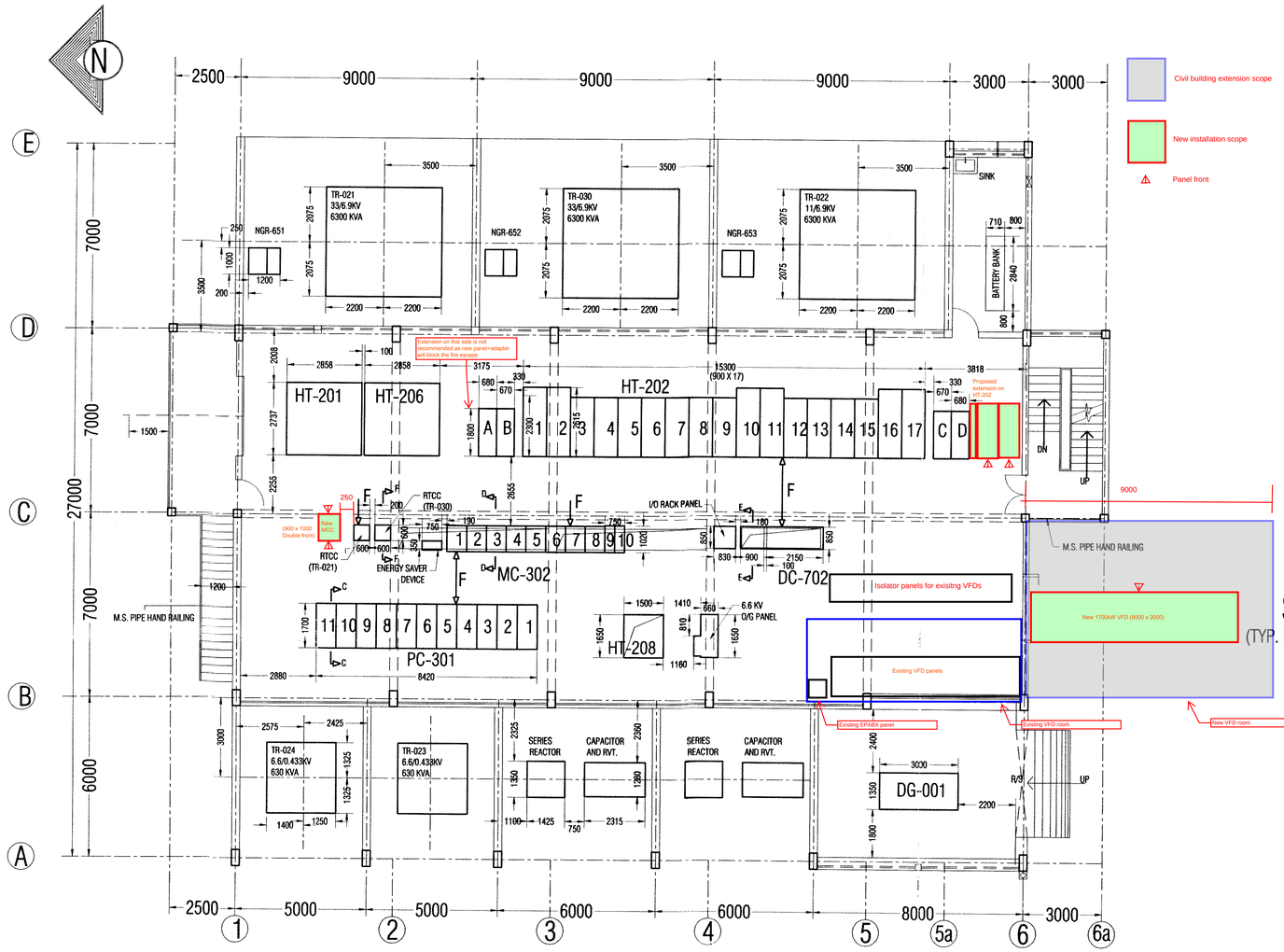


EQUIPMENT LAYOUT

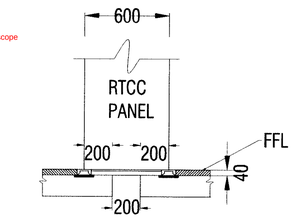


SECTION F-F

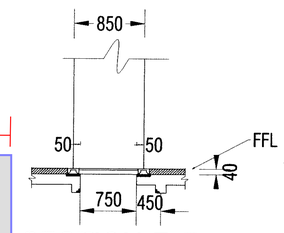


SECTION E-E
(TYP. FOR BATT. CHARGER & DCDB)

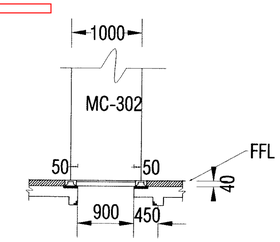


SECTION D-D

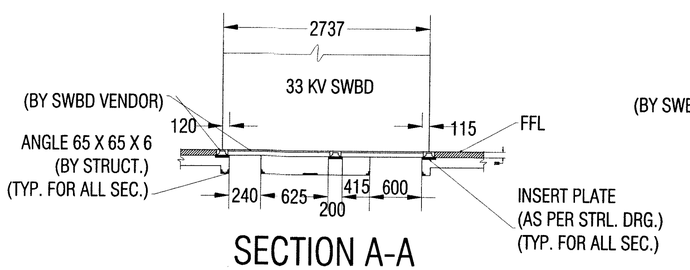


SECTION A-A

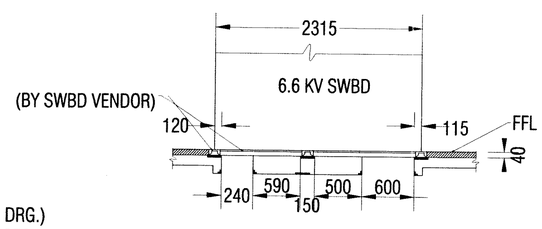


SECTION B-B

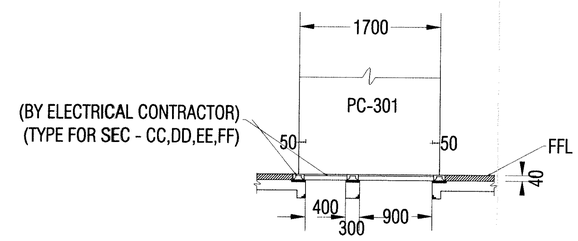


SECTION C-C

| REFERENCE DRAWING | NO. |
|---|---|
| SUB- STN - FIRST FLOOR PLAN, ELEVATION, SECTION | 3489-00-16-49-1104 |
| S/S FDN. LAYOUT & R/F DET. OF FDN. & PLINTH BEAMS | 3489-00-16-48-0028 |
| SUB-STN - G.A. & R/F DET. OF FLOOR SLAB AT EL. 104.200 | 3489-00-16-48-0029 |
| EQUIPEMENT LAYOUT SUB-STATION (VIZAG DESPATCH TERMINAL) | 3489-10-16-50-0401 |

NOTES:
1. REAR FLOOR CUT-OUTS OF PANELS SHALL BE SUTIABLY COVERED WITH 6MM THICK CHOD. PLATE COVERS.
2. IN CENTRAL ALL UNUSED CUT-OUTS SHALL BE SUITABLY COVERED WITH 6MM THICK REMOVABLE CHOD. PLATES TO SUIT SITE CONVENIENCE.
3. F ↓ DENOTES PANEL FRONT.

## LIST OF EQUIPMENTS

| S.NO | EQUIPMENT DESCRIPTION | EQPT.NO | VENDOR NAME | VENDOR DRG.NO | REV NO. |
|---|---|---|---|---|---|
| 1 | 33KV SWBD | HT-201 | M/S VOLTAS SWGR.LIMITED | H4312928G12& H4312928C | |
| 2 | 33KV SWBD | HT-206 | M/S VOLTAS SWGR.LIMITED | H4312928G12& H4312928C | |
| 3 | 11KV SWBD | HT-203 | M/S JYOTHI LTD. | | |
| 4 | 6.6KV SWBD | HT-202 | M/S VOLTAS SWGR.LIMITED | H4312933F1 & H4312933C1 TO H4312933C6 | |
| 5 | 415V PCC | HT-301 | M/S CONT. & SWCR. CO. LIMITED | HPCL/ J1402/201 | 2 |
| 6 | 415V MCC | HT-302 | M/S CONT. & SWCR. CO. LIMITED | HPCL/ J1402/204 | 1 |
| 7 | 33/6.9KV TRANSFORMER | TR-021,030 | M/S VOLTAMP TRANSFORMER LIMITED | DT2G-4281 | b |
| 8 | 11/6.9KV TRANSFORMER | TR-022 | M/S VOLTAMP TRANSFORMER LIMITED | DT2G-4283 | b |
| 9 | 6.6/415KV TRANSFORMER | TR-023,024 | M/S VOLTAMP TRANSFORMER LIMITED | DT3G-4287 | b |
| 10 | RTCC PANEL FOR TR-021 | - | M/S VOLTAMP TRANSFORMER LIMITED | 3RTCC-4279 | b |
| 11 | RTCC PANEL FOR TR-030 | - | M/S VOLTAMP TRANSFORMER LIMITED | 3RTCC-4279 | b |
| 12 | NEUTRAL GROUNDING RESISTOR | NGR-651, 652,653 | M/S S.R NARKHEDE ENGG PVT.LTD | 0654801 | 2 |
| 13 | HT CAPACITOR BANK SERIES REACTOR&RVT | - | M/S KAPSALES ELECTRICALS | HT 607 | - |
| 14 | BATT.CHARGER | DC-702 | M/S CHHABI ELECTRICALS | C7706A | 2 |
| 15 | 110V DCDB | DC-702 | M/S CHHABI ELECTRICALS | C7708C1 | 1 |
| 16 | BATTERY BANK 55CELLS 300AH | - | M/S STANDARD BATTERIES LIMITED | X-8/2044(b) | - |
| 17 | DG SET | DG-001 | | | |
| 18 | ENERGY SAVER DEVICE | ES-001 | | | |

HINDUSTAN PETROLEUM CORPORATION LTD.
VIZAG VIJAYAWADA SECUNDERABAD PIPELINE PROJECT

EQUIPMENT LAYOUT SUB STATION
(VIZAG DESPATCH TERMINAL)

| SCALE | DWG.NO. VVSPL / VDS / ELE / 102 |
|---|---|
| 1:100 | |

→ KSL / NUJNR

Annexure-D: Space availability for new VFD in existing substation at Rajahmundry
(Pg 2 of 4)

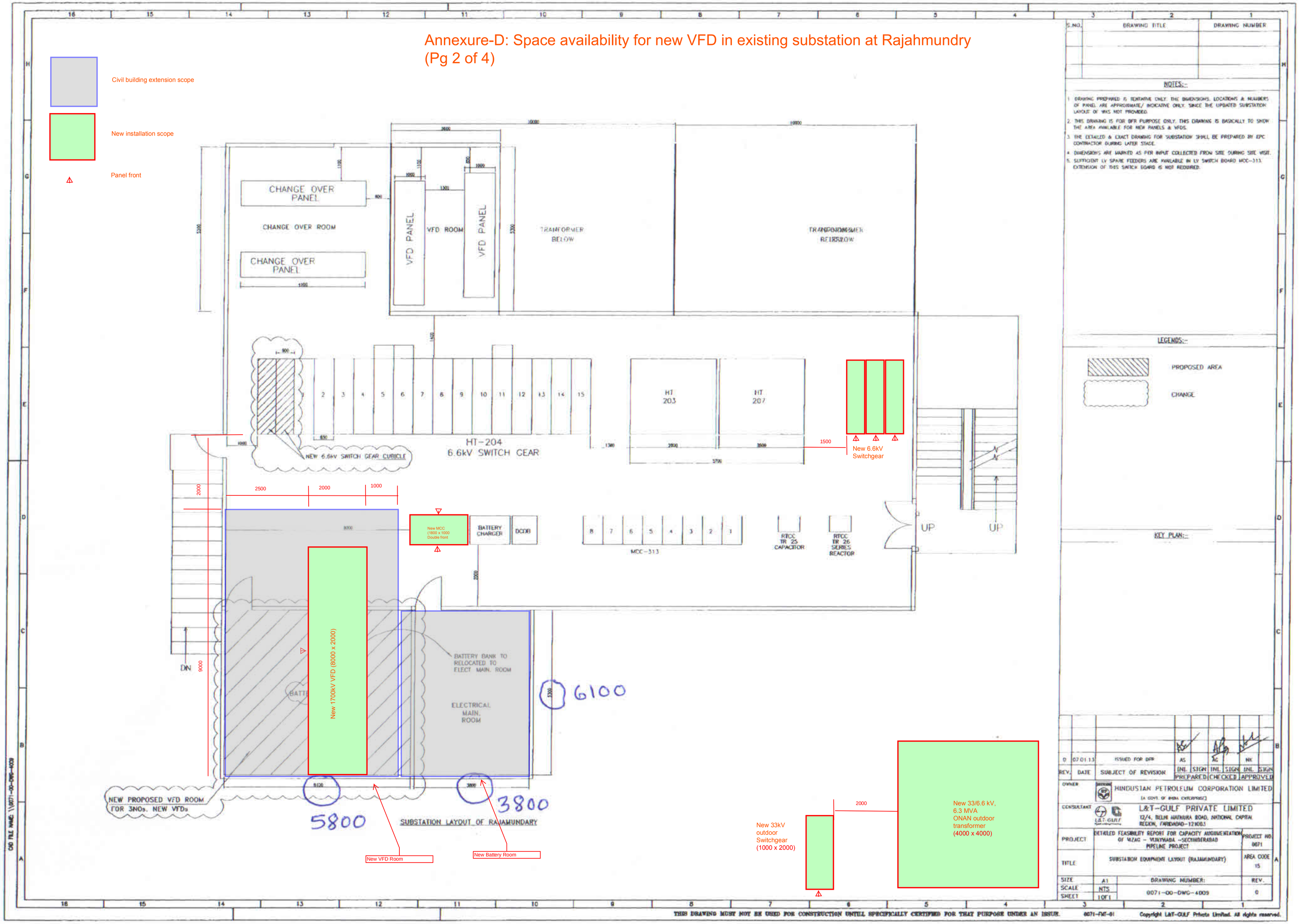

# Annexure-D: Space availability for new VFDs in existing substation at Suryapet (Pg 3 of 4)

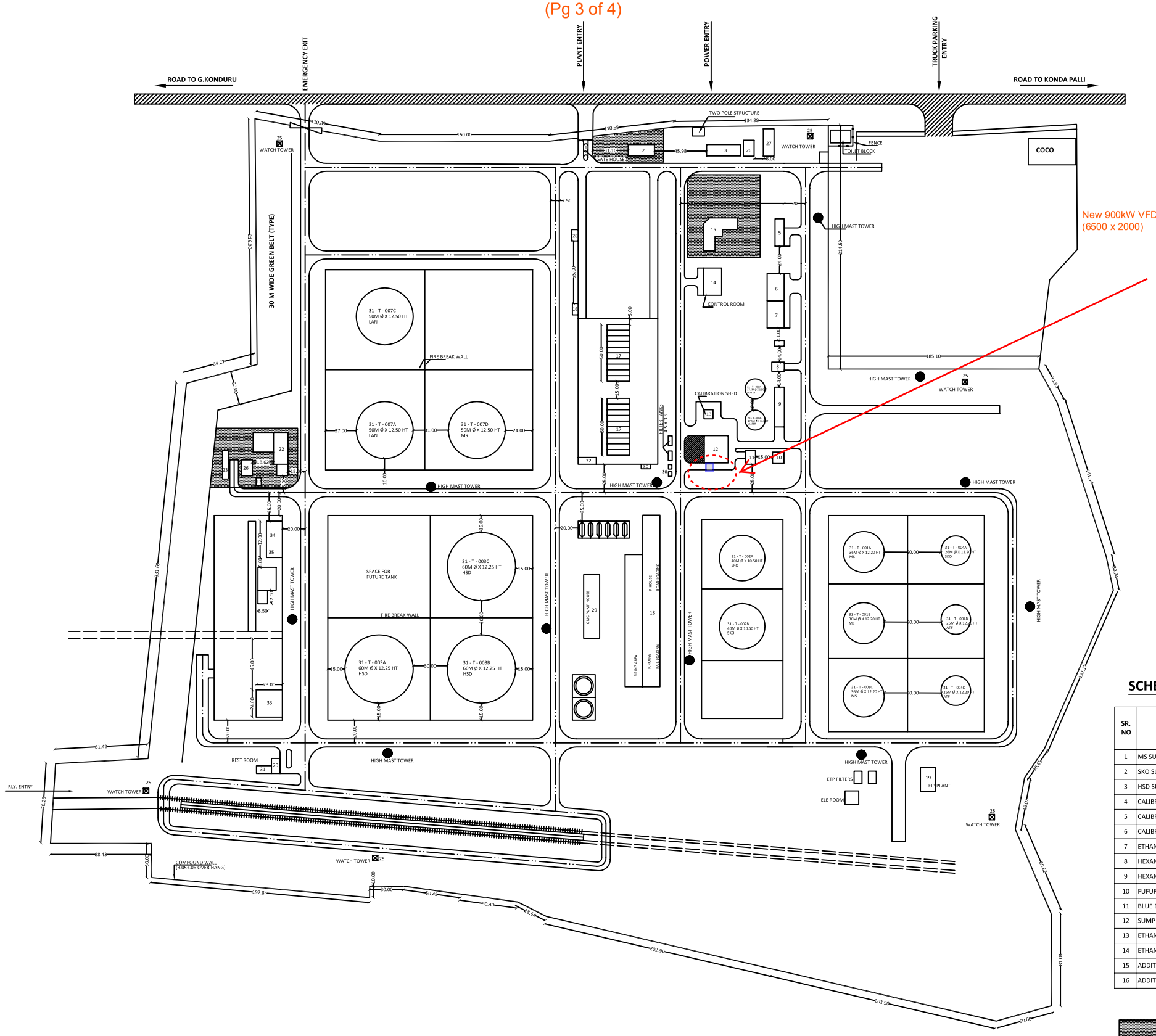


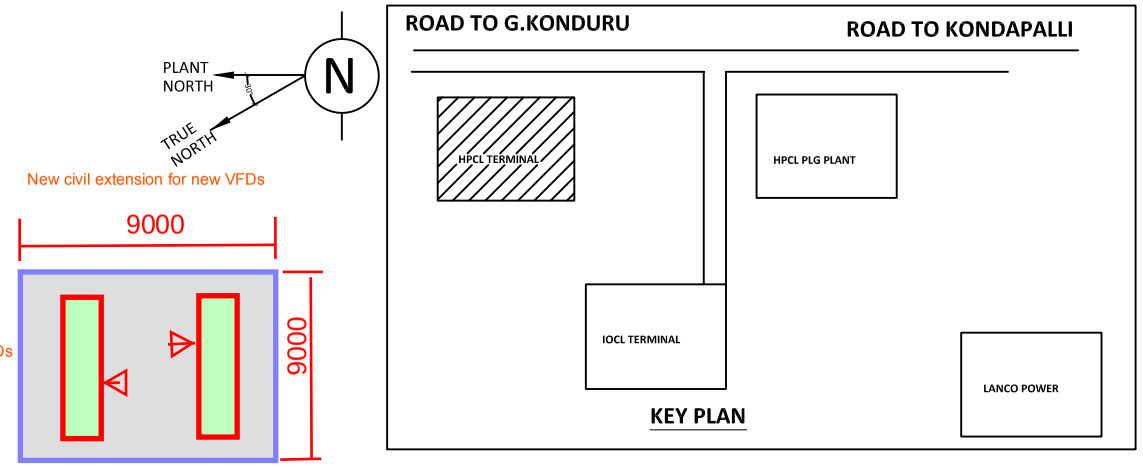





## SCHEDULE OF TANKS /VESSELS

| TANKS NO'S | SIZE IN METERS | | CAPACITY KL | PRODUCT | CLASS | TYPE |
|---|---|---|---|---|---|---|
| | DIA | HEIGHT | | | | |
| 31-T-001A | 36.00 | 12.20 | 11,000 | MS | A | FLOATING ROOF |
| 31-T-001B | 36.00 | 12.20 | 11,000 | MS | A | FLOATING ROOF |
| 31-T-001C | 36.00 | 12.20 | 11,000 | MS | A | FLOATING ROOF |
| 31-T-002A | 40.00 | 10.50 | 13,000 | SKO | B | FLOATING ROOF |
| 31-T-002B | 40.00 | 10.50 | 13,000 | SKO | B | FLOATING ROOF |
| 31-T-003A | 60.00 | 12.25 | 29,000 | HSD | B | FLOATING ROOF |
| 31-T-003B | 60.00 | 12.25 | 29,000 | HSD | B | FLOATING ROOF |
| 31-T-003C | 60.00 | 12.25 | 29,000 | HSD | B | FLOATING ROOF |
| 31-T-004A | 26.00 | 12.20 | 5,200 | SKO | B | INT. FL ROOF EXT. FIXED ROOF |
| 31-T-004B | 26.00 | 12.20 | 5,200 | ATF | B | INT. FL ROOF EXT. FIXED ROOF |
| 31-T-004C | 26.00 | 12.20 | 5,200 | ATF | B | INT. FL ROOF EXT. FIXED ROOF |
| 31-T-005A | 8.50 | 7.50 | 400 | SLOP | A | CONE ROOF |
| 31-T-005B | 8.50 | 7.50 | 400 | SLOP | A | CONE ROOF |
| 31-T-006A | 17.50 | 12.00 | 2800 | WATER | - | OPEN |
| 31-T-006B | 17.50 | 12.00 | 2800 | WATER | - | OPEN |
| 31-T-007A | 50.00 | 12.50 | 20,000 | LAN | A | FLOATING ROOF |
| 31-T-007C | 50.00 | 12.50 | 20,000 | LAN | A | FLOATING ROOF |
| 31-T-007D | 50.00 | 12.50 | 20,000 | MS | A | FLOATING ROOF |

## SCHEDULE OF FACILITIES

| SR.NO | DESCRIPTION | SIZE IN METERS | AREA IN Sg MTs |
|---|---|---|---|
| 1 | SECURITY CABIN | 4m x 10m | 40.0 |
| 2 | CANTEEN BUILDING | 23m x 10m | 230.0 |
| 3 | PARKING SHED | 30m x 10m | 300.0 |
| 4 | INVOICEING ROOM | 10m x 8m | 80.0 |
| 5 | LAB & MEDICAL ROOM | 24m x 8m | 192.0 |
| 6 | WARE HOUSE | 24m x 15m | 360.0 |
| 7 | LUBE DRUM YARD | 24m x 15m | 360.0 |
| 8 | FOAM TENDER SHED | 11m x 8m | 88.0 |
| 9 | FIRE WATER PUMP HOUSE | 35m x 8.5m | 297.0 |
| 10 | FOAM STATION | 10m x 10m | 100.0 |
| 11 | D.G. ROOM | 12m x 9m | 108.0 |
| 12 | SUB - STATION | 24m x 21m | 504.0 |
| 13 | CALIBRATION SHED | 8m x 8m | 64.0 |
| 14 | CONTROL ROOM (MARKETING) | 24m x 16m | 384.0 |
| 15 | ADMIN BUILDING | 29.10+19+10 | 360.0 |
| 16 | SEALING PLATFORM | 10m x 5m | 50.0 |
| 17 | TANK TRUK GANTRY (20 BAY) | 2X(50m x 10m) | 1500.0 |
| 18 | PUMP HOUSE (TTF & TWD) | 111m x 12m | 1332.0 |
| 19 | EFFLUICENT TREATMENT PLANT | 35m x 35m | 1225.0 |
| 20 | RAILWAY STAFF ROOM | 12m x 5.5m | 66.0 |
| 21 | PIPELINE STATION | 180m x 60m | 10800.0 |
| 22 | CONTROL ROOM (PIPE LINE) | 28m x 12m | 336.0 |
| 23 | FURFURAL STORE | 25m x 5m | 125.0 |
| 24 | TANK WAGON GANTRY | 355 x 3.5m | 1242.5 |
| 25 | WATCHMEN TOWER (6 NOS) | 4.75m x 4.75 m | 133.0 |
| 26 | ENGINEERING SHED | 14m x 9.5m | 133.0 |
| 27 | AMENITY BUILDING | 24m x 9.5m | 228.0 |
| 28 | ADDITIONAL SEALING BAY | 10m x 6m | 60.0 |
| 29 | OMC PUMP HOUSE | 26m x 12m | 312.0 |
| 30 | FURFUAL DOSING | 8m x 4m | 32.0 |
| 31 | EXTENSION OF RAILWAY STAFF ROOM | 21m x 11m | 231.0 |
| 32 | FUFURAL UNLOADING FACILITY | 16m x 6m | 96.0 |
| 33 | SUB STATION (PIPE LINE) | 16m x 6m | 96.0 |
| 34 | PUMP HOUSE (PIPE LINE) | 32m x 14m | 448.0 |
| 35 | PUMP SLAB | 5m x 3m | 15.0 |
| 36 | ADDITIVES VESSEL | 3m x 4m | 12.0 |

## SCHEDULE OF U/G & A/G CALIBRATION VESSELS/SMALL VESSELS

| SR. NO | DESCRIPTION | TAG NO | SIZE IN METERS | | CAPACITY KL | T TYPE | TYPE | CLASS |
|---|---|---|---|---|---|---|---|---|
| | | | DIA | HEIGHT | | | | |
| 1 | MS SUMP VESSEL | 31 -V-001 | 3.0 | 8.90 | 70 | HORIZONTAL | UNDER GROUND | A |
| 2 | SKO SUMP VESSEL | 31 -V-002 | 3.0 | 8.90 | 70 | HORIZONTAL | UNDER GROUND | B |
| 3 | HSD SUMP VESSEL | 31 -V-003 | 3.0 | 8.90 | 70 | HORIZONTAL | UNDER GROUND | B |
| 4 | CALIBRATION VESSEL | 31 -V-004 | - | - | - | VERTICAL | AS PER ISO 2341-53 | - |
| 5 | CALIBRATION VESSEL | 31 -V-005 | - | - | - | VERTICAL | AS PER ISO 2341-53 | - |
| 6 | CALIBRATION VESSEL | 31 -V-006 | - | - | - | VERTICAL | AS PER ISO 2341-53 | - |
| 7 | ETHANOL VESSEL | 31 -V-007 | 3.0 | 8.90 | 70 | HORIZONTAL | UNDER GROUND | A |
| 8 | HEXANE VESSEL | 31 -V-008 | 3.0 | 8.90 | 70 | HORIZONTAL | UNDER GROUND | A |
| 9 | HEXANE VESSEL | 31 -V-009 | 3.0 | 8.90 | 70 | HORIZONTAL | UNDER GROUND | A |
| 10 | FUFURAL VESSEL | 31 -V-010 | 1.0 | 2.51 | 2 | HORIZONTAL | UNDER GROUND | B |
| 11 | BLUE DYE VESSEL | 31 -V-011 | 4.8 | 1.80 | 0.5 | VERTICAL | ABOVE GROUND | B |
| 12 | SUMP TANK | 31 -V-101 | 2.2 | 6.00 | 22 | HORIZONTAL | UNDER GROUND | B |
| 13 | ETHANOL VESSEL | 31 -V-012 | 2.75 | 87.55 | 45 | HORIZONTAL | UNDER GROUND | A |
| 14 | ETHANOL VESSEL | 31 -V-013 | 2.75 | 87.55 | 45 | HORIZONTAL | UNDER GROUND | A |
| 15 | ADDITIVES VESSEL | 31 -V-014A | 0.8 | 1.00 | 0.5 | VERTICAL | ABOVE GROUND | A |
| 16 | ADDITIVES VESSEL | 31 -V-014B | 0.8 | 1.00 | 0.5 | VERTICAL | ABOVE GROUND | B |

DELICENCED AREA

CCOE LIC NO .P/HQ/AP/15/1463(P 15478)

HINDUSTAN PETROLEUM CORPORATION LTD
MARKETING DIVISION

VIJAYAWADA TERMINAL

OVERALL PLOT PLAN

| | |
|---|---|
| SCALE : 1:2000 | DATE : 01/07/11 |
| DRAWN BY : SS | DRG.NO : |
| CHECKED BY : AR | FILE NO : |
| APPROVED BY : C M | SHEET : OF |

Annexure-D: Space availability for new VFDs in exisitng substation at Suryapet
(Pg 4 of 4)

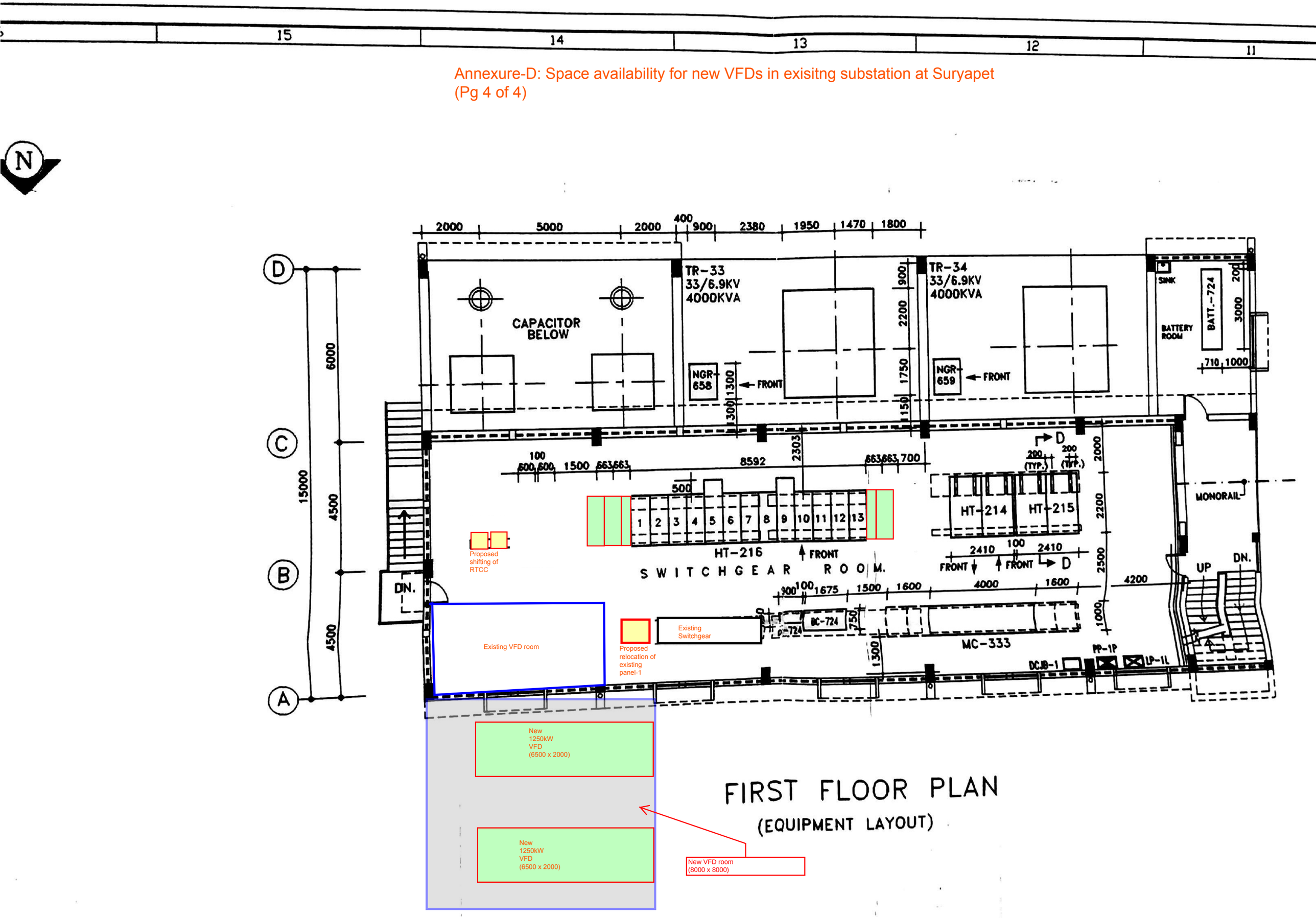

# Appendix 2 SPECIFICATIONS

**APPENDIX-2: SPECIFICATIONS**

| Document No. | Document Title |
|---|---|
| 14495-00-PE-SPC-0001 | Piping Material Specification |
| 14495-00-PE-SPC-0005 | Specification for External Painting and Protective Coating |
| 14495-00-EL-SPC-0009 | Specification for Induction motor |
| 14495-00-EL-SPC-0010 | Specification for Variable frequency drive |
| 14495-00-IC-SPC-0005 | Specification for Field Instruments. |

WorleyParsons
resources & energy

# VVSPL CAPACITY AUGMENTATION PROJECT

# Piping Material Specification

Project No: 403102-14495

Document No: 14495-00-PE-SPC-0001

02 Mar 2017

I-Think Lodha Techno Campus,
5th Floor, Tower B,
Pokhran Road No. 2
Thane (West) – 400607
Tel: +91 2266515700
Fax: +91 2267818000

© Copyright 2017 WorleyParsons

WorleyParsons

resources & energy

PIPING MATERIAL SPECIFICATION

# SYNOPSIS

This document presents Piping Material Specification for the VVSPL Capacity Augmentation Project.

**Disclaimer**

This report has been prepared on behalf of and for the exclusive use of HPCL, and is subject to and issued in accordance with the agreement between HPCL and WorleyParsons India Pvt Ltd.

WorleyParsons India Pvt Ltd accepts no liability or responsibility whatsoever for it in respect of any use of or reliance upon this document by any third party.

Copying this report without the permission of HPCL or WorleyParsons is not permitted.

**VVSPL CAPACITY AUGMENTATION PROJECT**

| REV | DESCRIPTION | ORIG | REVIEW | WORLEY-PARSONS APPROVAL | DATE | CUSTOMER APPROVAL | DATE |
|---|---|---|---|---|---|---|---|
| B | Issued for Review | MAYM | PISK | KAVK | | | |
| | | | | | | | |
| | | | | | | | |

# CONTENTS

**1 INTRODUCTION** ..... 5
1.1 General ..... 5
1.2 Scope ..... 5
1.3 Definitions and Abbreviations ..... 5
1.4 Reference Documents ..... 7
1.4.1 Code for Pressure Piping ..... 7
1.4.2 Code and Standards ..... 7
1.4.3 American Society of Mechanical Engineers ..... 7
1.4.4 American Society for Testing and Materials ..... 9
1.4.5 British Standards Institute ..... 11
1.4.6 American Petroleum Institute ..... 11
1.4.7 Manufacturer's Standardization Society ..... 12
1.4.8 Indian Standard ..... 13
1.4.9 International Organization of standardization ..... 13
1.4.10 Project Specification ..... 13
**2 GENERAL REQUIREMENTS** ..... 14
**3 TECHNICAL REQUIREMENTS** ..... 14
3.1 General ..... 14
**4 PIPING** ..... 15
4.1 General ..... 15
4.2 Carbon Steel Pipe ..... 16
4.3 Austenitic Stainless Steel Pipe ..... 16
4.4 Pipe Fittings ..... 16
4.5 Flanges & Flanged Joints ..... 17
4.6 Valves ..... 19
4.6.1 General ..... 19

4.6.2 Ball Valves ..... 21
4.6.3 Globe Valves ..... 21
4.6.4 Check Valves ..... 22
4.6.5 Gate Valves ..... 22
4.6.6 Plug Valves ..... 22
4.6.7 Double Block & Bleed Valves ..... 22
4.6.8 Double Block & Bleed and Double Isolation Valves ..... 22
4.6.9 Butterfly Valves ..... 23
4.6.10 Inspection and Testing ..... 23
**5 CERTIFICATIONS ..... 25**
5.1 Type A Certificate ..... 25
5.2 Type B Certificate ..... 26
5.3 Type C Certificate ..... 26
5.4 Certification Guidelines ..... 26
5.4.1 Type A Certificate ..... 26
5.4.2 Type B Certificate ..... 26
5.4.3 Type C Certificate ..... 27
**6 CLASS DESIGNATION CODE ..... 27**
**7 PIPING CLASS & SERVICE SUMMARY ..... 28**
**8 PIPE CLASSES ..... 29**
**9 BOLT LENGTH TABLES ..... 47**
**10 DRAIN & VENT CONNECTIONS FOR PIPING 11/2” & BELOW ..... 51**
**11 DRAIN & VENT CONNECTIONS FOR PIPING 2” & ABOVE ..... 52**
**12 SPECTACLE BLINDS, SPADES & SPACERS (NPS 0.5 - NPS 24) ..... 53**

**APPENDIX A – BRANCH CONNECTIONS ..... 57**

# 1 INTRODUCTION

## 1.1 General

Hindustan Petroleum Corporation Limited (hereinafter referred to as "HPCL") has appointed WorleyParsons India Pvt. Ltd. as EPMC for the project.

HPCL is currently pursuing to expand Vizag refinery from the current name plate capacity of 8.3 MMTPA to 15 MMTPA with a yield of 11.85 MMTPA for MS, HSD & SKO. In-line with refinery expansion plan, HPCL is also planning to take up capacity augmentation of existing VVSPL (Vizag Vijayawada Secunderabad Pipeline) from 5.38 MMTPA to 7.9 MMTPA simultaneously.

Capacity augmentation is proposed by implementation of new pump stations at existing IPS-1 (Ch. 92.9 km), IPS-2 (Ch. 264.5 km), SV-17 Station and also by upgrading the existing booster pump facilities in Vizag, Rajahmundry, Vijayawada, Suryapet and in Secunderabad. It also covers formulating and integration of new facilities with existing Electrical, Instrumentation, PLC, SCADA, APPS including LDS, OWS system, piping arrangements.

## 1.2 Scope

This engineering specification specifies the minimum requirements for the design, manufacture & supply of pipes, fittings, flanges, valves, gaskets, bolts & nuts, etc. for handling non-sour hydrocarbons & utilities. It describes the specific requirement for the selection of piping materials to be used for Capacity Augmentation of VVSPL Project.

## 1.3 Definitions and Abbreviations

| | |
|---|---|
| AARH | Average Arithmetic Roughness Height |
| BB | Bolted Bonnet |
| BW | Butt Weld |
| CA | Corrosion Allowance |

| | |
|---|---|
| CAF | Compressed Asbestos Fibre |
| CE | Carbon Equivalent |
| CS | Carbon Steel |
| ENP | Electroless Nickel Plating |
| EFW | Electric Fusion Welding |
| FF | Flat Face |
| HAZ | Heat Affected Zone |
| Hv | Vickers Hardness |
| HPCL (Company) | Hindustan Petroleum Corporation Limited |
| HRC | Rockwell Hardness C |
| HW | Handwheel |
| LO | Lever Operated |
| NDE | Non-destructive Examination |
| NPS | Nominal Pipe Size |
| OS&Y | Outside Screw and Yoke |
| P&IDs | Piping and Instrumentation Diagrams |
| PN | Nominal Pressure (in $kg/cm^2g$) |
| PREN | Pitting Resistance Equivalent Number |
| PTFE | Polytetrafluoroethylene (fluoroplastic) |
| RF | Raised Face |
| RTJ | Ring Type Joint |
| SAW | Submerged Arc Welding |
| Sch | Pipe Schedule (wall thickness) |
| SS | Stainless Steel |
| WT | Wall Thickness |
| WP | WorleyParsons |
| XS | Extra Strong (pipe schedule) |
| XXS | Double Extra Strong (pipe schedule) |
| CNAF | Compressed Non Asbestos Fibre |

## 1.4 Reference Documents

### 1.4.1 Code for Pressure Piping

Piping shall comply with the latest editions of ASME B31.3 and other codes and standards as referred herein.

### 1.4.2 Code and Standards

The requirements of the latest editions of the following Codes and Standards shall be complied with unless specifically noted otherwise within this Specification.

### 1.4.3 American Society of Mechanical Engineers

| | |
|---|---|
| ASME B31.3 | Process Piping |
| ASME SEC II | Materials: Part A- Ferrous Material<br>Part B- Non Ferrous Material<br>Part C- Specification for Welding Rods<br>Part D- Material Properties |
| ASME SEC V | Non-destructive Examination |
| ASME SEC VIII | ASME Boiler and Pressure Vessel Code, all applicable sections |
| ASME SEC IX | Welding and brazing qualifications |
| ASME B1.1 | Unified inch screw threads |
| ASME B1.20.1 | Pipe threads, general purpose (inch) |
| ASME B16.5 | Pipe flanges and flanged fittings |
| ASME B16.9 | Factory-made wrought steel butt welding fittings |

| | |
|---|---|
| ASME B16.10 | Face-to-face and End-to-end dimensions of valves |
| ASME B16.11 | Forged fittings, socket-welding and threaded |
| ASME B16.14 | Ferrous pipe plugs, bushings, and locknuts with pipe threads |
| ASME B16.20 | Metallic gaskets for pipe flanges - ring joint, spiral wound and jacketed |
| ASME B16.21 | Nonmetallic flat gaskets for pipe flanges |
| ASME B16.25 | Butt welding ends |
| ASME B16.28 | Wrought steel butt welding short radius elbows and returns |
| ASME B16.34 | Valves - flanged, threaded and butt welding end |
| ASME B16.36 | Orifice flanges |
| ASME B16.47 | Large diameter steel flanges |
| ASME B16.48 | Steel Line Blanks |
| ASME B18.2.1 | Square and hexagonal bolts and screws |
| ASME B18.2.2 | Square and hexagonal nuts |
| ASME B36.10 | Welded and seamless wrought steel pipe |
| ASME B36.19 | Stainless steel pipe |
| ASME B46.1 | Surface texture |

### 1.4.4 American Society for Testing and Materials

| | |
|---|---|
| ASTM A53 | Pipe, Steel, Black and Hot-Dipped, Zinc-Coated, Welded and Seamless |
| ASTM A105 | Carbon Steel Forgings for Piping Applications |
| ASTM A106 | Seamless Carbon Steel Pipe for High Temperature Service |
| ASTM A182 | Forged or Rolled Alloy Steel Pipe Flanges, Forged Fittings and Valves and Parts for High Temperature Service |
| ASTM A193 | Alloy Steel and Stainless Steel Bolting Materials for High Temperature Service. |
| ASTM A194 | Carbon and Alloy Steel Nuts for Bolts for High Pressure and High Temperature Service |
| ASTM A216 | Steel Castings, Carbon, Suitable for Fusion Welding, for High Temperature Service |
| ASTM A234 | Piping Fittings of Wrought Carbon Steel and Alloy Steel for Moderate and Elevated Temperatures. |
| ASTM A240 | Heat-Resisting Chromium and Chromium-Nickel Stainless Steel Plate, Sheet and Strip for Pressure Vessels |
| ASTM A262 | Detecting Susceptibility to Intergranular Attack in Austenitic Stainless Steels |
| ASTM A269 | Seamless and Welded Austenitic Stainless Steel Tubing for General Service |
| ASTM A312 | Seamless and Welded Austenitic Stainless Steel Pipes |
| ASTM A351 | Casting, Austenitic for Pressure-Containing Parts |
| ASTM A358 | Electric Fusion - Welded Austenitic Chromium - Nickel Stainless Steel Pipe for High-Temperature Service |

| | |
|---|---|
| ASTM A370 | Test Methods and Definitions for Mechanical Testing of Steel Products |
| ASTM A403 | Wrought Austenitic Stainless Steel Piping Fittings |
| ASTM A435 | Straight-Beam Ultrasonic Examination of Steel Plates |
| ASTM A450 | General Requirements for Carbon, Ferritic Alloy, and Austenitic Alloy Steel Tubes |
| ASTM A515 | Standard Specification for Pressure Vessel Plates, Carbon Steel, for Intermediate and Higher Temperature |
| ASTM A516 | Standard Specification for Pressure Vessel Plates, Carbon Steel, for Moderate- and Lower-Temperature Service |
| ASTM A519 | Seamless Carbon and Alloy Steel Mechanical Tubing |
| ASTM A672 | Electric-Fusion- Welded Steel Pipe for High Pressure Service at Moderate Temperatures |
| ASTM A694 | Carbon and Alloy Steel Forgings for Pipe Flanges, Fittings, Valves and Parts for High Pressure Transmission Service |
| ASTM A700 | Packaging, Marking, and Loading Methods for Steel Products for Domestic Shipment |
| ASTM A790 | Seamless and Welded Ferritic / Austenitic Stainless Steel Pipe |
| ASTM A815 | Wrought Ferritic, Ferritic/Austenitic, and Martensitic Stainless Steel Piping Fittings |
| ASTM A860 | Wrought High-Strength Low Alloy Steel Butt Welding Fittings |
| ASTM E165 | Test Method for Liquid Penetrant Examination |
| ASTM G48 | Test Method for Pitting and Crevice Corrosion Resistance of Stainless Steel and Related Alloys by the Use of Ferric Chloride Solution |

### 1.4.5 British Standards Institute

| | |
|---|---|
| BS 1868 | Steel Check valves (Flanged and Butt-welding ends) for the petroleum, petrochemical and allied industries |
| BS 1873 | Steel Globe and Globe stop and Check valves (Flanged and Butt-welding ends) for the petroleum, petrochemical and allied industries |
| BS 5353 | Steel Plug Valves |
| BS EN 10204 | Metallic products- Types of inspection documents |
| BS EN ISO 10497 | Testing of Valves – Fire Type-Testing Requirements |
| BS EN ISO 15761 | Steel Gate, Globe and Check Valves for Sizes DN 100 and Smaller for Petroleum and Natural Gas industries |
| BS EN 12266-1 | Industrial Valves – Testing of Valves Part 1 – Pressure Tests, test procedures and Acceptance Criteria – Mandatory Requirements |
| BS EN 12266-2 | Industrial Valves – Testing of Valves Part 2 – Tests, test procedures and Acceptance Criteria – Supplementary Requirements |
| BS EN ISO 17292 | Steel Ball valves for petroleum, petrochemical and allied Industries |

### 1.4.6 American Petroleum Institute

| | |
|---|---|
| API 5L | Specification for Line Pipe |
| API 6FA | Fire Test for Valves |
| API 594 | Check valves: wafer and wafer-lug, and double flanged type |
| API 598 | Valve Inspection and Testing |

| | |
|---|---|
| API 599 | Metal Plug Valves - Flanged, Threaded and Welding ends |
| API 600 | Steel Gate Valves - Flanged and Butt-welding ends, Bolted and Pressure seal bonnets |
| API 602 | Compact Steel Gate, Globe & Check Valves for Sizes NPS 4 & Smaller for the Petroleum & Natural Gas Industries |
| API 607 | Fire test for Soft-Seated quarter-turn valves |
| API 608 | Metal Ball Valves - Flanged, Threaded and Butt-Welding Ends |
| API 609 | Lug and wafer type butterfly valves |
| API 6D | Specification for pipe line valves (Gate, Plug, Ball and Check valves) |

### 1.4.7 Manufacturer's Standardization Society

| | |
|---|---|
| MSS SP-6 | Standard finishes for contact faces of pipe flanges and connecting end flanges of valves and fittings |
| MSS SP-25 | Standard marking system for valves, fittings, flanges and unions |
| MSS SP-44 | Steel pipeline flanges |
| MSS SP 45 | Bypass and Drain Connections |
| MSS SP 53 | Quality Standard for Steel Castings and Forgings for Valves, Flanges and Fittings and Other Piping Components |
| MSS SP 55 | Quality Standard for Steel Castings for Valves, Flanges, Fittings, and Other Piping Components - Visual Method for Evaluation of Surface Irregularities |
| MSS SP 75 | High Test Wrought Butt Welding Fittings |
| MSS-SP-95 | Swage Nipples and Bull Plugs |

| | |
|---|---|
| MSS SP-97 | Integrally reinforced forged branch outlet fittings – socket welding, threaded and butt welding ends |

### 1.4.8 Indian Standard

| | |
|---|---|
| IS 1239 | Steel Tubes,Tubular & Other Wrought Steel Fittings |
| IS 3589 | Steel Pipes for Water & Sewage |

### 1.4.9 International Organization of standardization

| | |
|---|---|
| ISO 6506 | Metallic Materials - Brinell Hardness Test |
| ISO 6507 | Metallic materials - Vickers hardness test |
| ISO 6508 | Metallic materials - Rockwell hardness test |

### 1.4.10 Project Specification

The following General Specifications shall be used in conjunction with this specification where applicable:

| | | |
|---|---|---|
| * | 14495-00-PE-BOD-0001 | Piping Design Basis |
| * | 14495-00-PE-SPC-0002 | Specifications for Pipe and Fittings |
| * | 14495-00-PE-SPC-0003 | Specifications for Flanges |
| * | 14495-00-PE-SPC-0004 | Specifications for Valves |
| * | 14495-00-PE-SPC-0005 | Specification for External Painting & Protective Coating |
| * | 14495-00-PE-SPC-0006 | Specification for Welding |
| * | 14495-00-PE-SPC-0007 | Specification for Fabrication and Erection & Pressure testing of Piping |

# 2 GENERAL REQUIREMENTS

- All piping materials selected under this specification shall be in compliance with the project specification.
- Material selections shall comply with the maximum pressure and temperature limitation as specified in the service summary. The piping drawings will designate jurisdictional limits of applicable piping standards.
- Substitution of equivalent materials is subject to approval of the WP/HPCL. All requests for substitution shall be accompanied with sufficient data, drawings and descriptive details to permit evaluation by the WP/HPCL.
- Cast iron, ductile or malleable iron, aluminium, plastic or copper-bearing alloys shall not be used in hydrocarbon service.
- Piping design pressure is based on flange maximum-allowable working pressure, unless otherwise noted in Job Specification.
- When required, impact testing shall comply with applicable standards and material specifications.
- All gaskets shall be asbestos free.
- Aluminium jumper shall be provided across the flanged joint and length of the bolt shall be taken such that at least two threads remain exposed after the nut for fixing the continuity jumper.

# 3 TECHNICAL REQUIREMENTS

## 3.1 General

All piping component wall thicknesses specified in this document are calculated in accordance with ASME B31.3 as specified and are based on continuous long-term internal design pressure, design temperature, specified corrosion/erosion allowance, the manufacturing minus/under tolerance and the threading allowance as applicable. All piping subject to any additional loading such as short term upset conditions, occasional loads, external pressure, thermal loading, live loads, marine motions etc. shall be individually assessed to ensure full compliance with ASME B31.3.

Pipe dimensions shall be in accordance with ASME B36.10M for carbon steel and for stainless steel with wall thicknesses in excess of Sch 80S. For stainless steel with wall thicknesses up to and including Sch 80S, dimensions shall be in accordance with ASME B36.19M.

All materials shall be new, clean and free from rust, pits and obvious defects.

Pipe, valves and fittings in sizes 1 1/4", 2 1/2", 3 1/2" and 5" shall not be used. Where equipment is normally provided by a supplier with connections in any of the above sizes, connections will be made with suitable swages or reducers to pipe of approved size.

Materials shall conform to impact test requirements specified in ASME B31.3, for the combination of minimum design metal temperature (MDMT) and reference thicknesses specified if required.

Deviations from the Piping Material Specification may occur due to non-availability or design conditions. These deviations are permissible if they are of an equal or higher standard than the individual Piping Standard requirements, and written approval is given by WP/HPCL. Piping components not specified on the individual Piping Spec, shall be treated as specialty piping (SP) items and shall have a specific data sheet for each of the design type, rating and size/dimensions.

All piping materials except for bolts/nuts and gaskets shall be supplied with material certificates conforming to European Standard EN 10204, Type 3.1, or WP approved Inspection Certificate. Bolts/nuts and gaskets shall be supplied with material certificates conforming to European Standard EN 10204, Type 2.2 and 2.1 respectively, or WP approved Inspection Certificate.

Galvanized piping requiring welding or threading shall be galvanized after fabrication. Electro-less nickel plating may be substituted for galvanizing on certain fittings with WP approval. Galvanized piping shall comply with the requirements of ASTM A53.

# 4 PIPING

## 4.1 General

All pipe shall be specified with the nominal size and schedule number as per ASME B36.10M unless specified otherwise on the individual Piping Specs. For non-schedule pipe wall thickness when specified is the minimum wall thickness permitted within allowable manufacturing tolerance. The pipe wall thickness may be supplied thicker than specified only after written approval has been given by WP/HPCL. Corrosion allowance is as per the relevant Piping Specs.

Pipes shall be supplied with beveled end. Beveling shall be in accordance with ASME B16.25. Where plain end pipes are specified, as for small bore pipes for socket welded piping, the pipes shall be supplied with square cut ends.

Pipe shall preferably be supplied in double random lengths. Each length of pipe shall be subject to a hydrostatic test in accordance with the relevant code. Single random lengths will be accepted where specified in the Job Specification or for small diameter pipes or where double random lengths are unavailable.

Each length of pipe shall be marked legibly by “low stress die-stamping” or by “engraving” or by “stenciling”. Stencil marking shall utilize water insoluble ink; the ink shall not contain any harmful metal or metal salts such as zinc, lead or copper which cause corrosive attack on heating. Stainless steel piping shall be supplied marked permanently over the entire length. The marking

details shall be as per material specifications and shall include nominal pipe size (NPS), heat number and the manufacturer's unique symbol.

Beveled end pipes shall be supplied with ends protected to avoid transport damages. Pipes shall be shipped with end protectors to protect beveled ends. Also, pipes shall be supplied, preserved and protected as per the requirements of ASTM A700.

### 4.2 Carbon Steel Pipe

Carbon steel pipe shall have a maximum carbon content of 0.23% by ladle analysis or 0.25% by product analysis. Maximum carbon equivalent (CE) shall be 0.43% by ladle analysis or 0.45% by product analysis according to the formula:

$$CE = C + (\frac{Mn}{6}) + \frac{(Cr + Mo + V)}{5} + \frac{(Ni + Cu)}{15}$$

Where Cr, Mo, V and Cu are not shown on the material certificates, the carbon equivalent shall be 0.38% by ladle analysis or 0.40% by check analysis, as calculated in accordance with the formula:

$$CE = C + (\frac{Mn}{6})$$

Length will be as specified on the Job Specifications.

### 4.3 Austenitic Stainless Steel Pipe

Pipe materials shall be in accordance with ASTM A312 TP316 or ASTM A358 TP316, if specified.

All pipes shall be supplied in the de-scaled, pickled, passivated and solution heat treated condition. Repair by welding is not permitted.

Material shall be capable of successfully passing an inter-granular corrosion test. For pipes made by automatic welding process, the entire length of the weld shall be examined 100% by an eddy current test in accordance with ASTM A450 or by radiography in accordance with the requirements of ASME Section VIII, Div 1 Para UW-51. A weld joint factor of 1.00 shall be guaranteed.

### 4.4 Pipe Fittings

Carbon steel fittings shall meet the requirements of ASTM A234 and A105N, as applicable. Carbon steel forgings shall be supplied with a maximum carbon content of 0.25% and CE of 0.45% by product analysis. Fittings manufactured from pipe shall comply with requirements specified for pipe.

Where austenitic stainless steel fittings are specified, they shall conform to ASTM A182 or A403 and the same material requirements specified for austenitic stainless steel pipe.

Dimensions of metallic butt weld fittings shall be in accordance with ASME B16.9, with socket weld and threaded fittings to ASME B16.11. All 90° butt weld elbows shall be long radius (1.5D) unless space limitations dictate otherwise & WP/HPCL approval is given.

For fittings made of carbon steel, the beveled surface of the welding end shall be subjected to wet magnetic particle examination in accordance with practice E709. Personnel performing the examination shall be qualified in accordance with ASNT-TC-1A.

For fittings made of wrought austenitic stainless steel, preferably, all the surfaces shall be liquid penetrate tested in accordance with Practice E165. Personnel performing the examination shall be qualified in accordance with ASNT-TC-1A.

Repair by welding of wrought fittings shall not be allowed, without WP/HPCL approval.

Welding components used for joining unequal wall thickness and/or yield strength materials shall be bevelled in accordance with ASME B16.25, the properties of the welding material shall correspond to the higher strength material.

Threaded and socket-weld fittings: Threaded and socket-welded fittings shall comply with ASME B16.11. Bushings, street elbows and close nipples may be used only with permission of the WP/HPCL. Threaded half couplings are prohibited. Threads shall be per ASME B1.20.1 tapered. Thread sealant shall be Teflon tape.

Fittings shall be marked and shipped in crates, grouped according to pressure/class rating where possible.

Pipe fittings, other than non-metallic shall be supplied with wall thickness and nominal sizes that meet the requirements of ASME B36.10M, B36.19M, B16.9, B16.11 and where allowed, B16.28.

## 4.5 Flanges & Flanged Joints

Weld-neck flanges and socket-weld flanges shall be provided with bore to match the attached pipe.

All flanges in butt weld (BW) piping shall be weld-neck (WN) unless specific requirements dictate otherwise.

Flange dimensions shall be in accordance with ASME B16.5.

Repair by welding is not permitted.

Flanges shall be packed and shipped in such a way as to prevent damage of machined parts. All machined or threaded parts shall be protected in accordance with ASTM A700. Suitable protection shield or cover shall be provided on the gasket contact surface. Galvanized flanges shall be packed in accordance with ASTM A53.

Carbon steel forgings shall be supplied with a maximum carbon content of 0.25% and CE of 0.45% by product analysis.

The finish of contact faces of pipe flanges & connecting end flanges of valves & fittings shall be governed by ASME B16.5 & following:

Roughness requirements (Finish: AARH standards per ASME B46.1):

a. Raised Face (RF): Serrated finish 125 to 250 µinRa.

b. Flat Face (FF): Serrated finish 125 to 250 µinRa.

c. Ring Type Joint (RTJ): Smooth finish 63 µinRa max.

Orifice flanges shall be as per ASME B16.36.

Jack screws, 180° apart, shall be provided, one on each flange, for all orifice assemblies. Carbon steel flange bolting shall be stud bolting with material conforming to the Piping Specs and threaded full length. Reduced shank stud bolts shall not be used. Nuts shall be as specified on the Piping Specifications.

Stud bolts of 1" diameter and less shall be UNC with those 1-1/8" diameters and larger being of the UN8 series per ASME B1.1. Stud bolts 1-5/8" diameter and larger are to be increased in length by a minimum of one nut thickness to allow the use of hydraulic bolt tensioning equipment. Nuts shall be Hexagon Heavy Series to ASME B18.2.2. Thread sealant shall be teflon paste.

Flat face flanges, unless specified on the Piping Specifications, shall not be used without specific WP/HPCL approval. Full-face gaskets shall be used with flat-face flanges.

All flanged joints shall be installed with a single gasket between contact faces.

Spiral wound gaskets shall be used for all metallic RF joints. Spiral wound gaskets shall be as per the following:

a. 0.175" nominal thickness.

b. SS 316 windings.

c. Flexile super filler or equal.

d. Soft steel Centering ring 0.125" thick, CS for CS piping and SS for SS Piping.

e. Design to ASME B16.20.

Flange gaskets shall be SS 316 windings with flexible graphite "fire rated" filler or approved equal, confirming to ASME B16.20.

Ring type joint gaskets shall be oval or octagonal in section and shall conform to ASME B16.20 or to API 6A (as applicable).

Gaskets shall be resistant to the effects of aviation hydrocarbon fuels & manufactured of fire-resistant materials for ATF service.

Graphite coated, fibre reinforced gasket conforming to ASME B16.21 shall be used for potable water systems after approval of WP/HPCL.

Insulating gasket as shown below will generally be used when bolting dissimilar metal flanges. Insulating set is comprised of one phenolic resin central gasket with neoprene coating on faces, one phenolic sleeve per bolt, two phenolic washers per bolt and two steel washers per bolt, packed in an individual box. When bolting copper nickel, stainless steel or duplex stainless steel

flanges together, similar sleeves and washers, less phenolic resin gasket, shall be utilized in conjunction with specified stud bolts and gaskets.

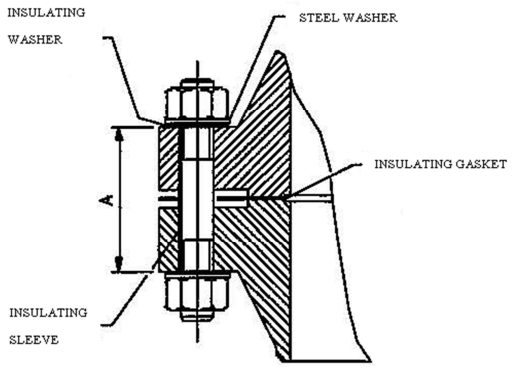


Note: - Cut insulating sleeve length 1/4” shorter than dimension A.

## 4.6 Valves

### 4.6.1 General

Valve selection shall be in accordance with the relevant Piping Standard.

Valves shall be supplied in accordance with WP/HPCL’s Approved Manufacturers List. Valve manufacturer’s numbers illustrate an approved type. An equivalent substitute may be made with WP/HPCL’s approval.

Valves size 2" and above which are described as Outside Screw and Yoke (OS&Y) with rising stem and non-rising hand wheel shall be provided with stem protectors and visual position indicators.

Valves provided with integral by-passes shall confirm to the same Piping Specification as the principal valve. The bypass valve shall be a globe or ball valve. The manufacturer of the principal valve shall furnish and install the bypass complete with valve.

Handwheels shall be made of carbon steel, ductile iron, or malleable iron.

Chain wheel operator when required by Job Specification and shall be adequate for the pressure and temperature with chain guides. Chain operated valves, size 10-in and larger, shall be provided with an impact hammer. Hammer-blow operators shall not be provided for cast-iron valves or valves with cast-iron wheels.

Valves heavier than 226 Kg shall be provided with lifting lug. The design of such lifting lug shall be approved by the WP/HPCL.

Valves shall be bi-directional unless valve construction specifically renders this requirement impractical – e.g. Globe, Ball and Needle valves. For uni-directional valves, an indicator showing flow direction shall be engraved or cast/forged into the valve body.

Vent and drain valves shall comply with the Job Specification and shall be adequate for the pressure and temperature limitation indicated in the relevant Material Specification.

Valve position indicators shall be designed so as to prevent incorrect orientation on valve assembly.

Quarter turn valve handles shall be lever lock type as specified in the purchase requisition or data sheet.

Gearbox operators shall be sized to provide an output torque of at least 150% of the maximum required valve operating torque. Gearbox ratios shall be 60:1 maximum for valves 8" and smaller and 120:1 maximum for valves 10" and larger. Maximum operating force required to operate the valve shall be within 25 kgf. Where indicated in the Job Specification, gear operators are to be supplied and shall be the manufacturer's standard heavy duty models selected to provide the valve torque requirements. Gear boxes shall be fitted with position indicators, have self-locking mechanisms, and be fully sealed and protected to suit a very corrosive marine environment.

Bonnet gaskets may be to the manufacturer's standard, provided that the standard is equal to, or better than, that of associated flange gaskets.

Valve bolting shall comply with the following:

a. Carbon and Alloy Steel Valves:

   ASTM A193-B7 & ASTM A194-2H

b. Stainless Steel Valves:

   SS304: ASTM A193 B8 & ASTM A194 8

   SS316: ASTM A193 B8M/B8MA & ASTM A194 8M/8MA

Bolting specified above is for external bolting only. Internal bolting requirements are subject to intended fluid service requirements.

Where specified, welding end valves shall be supplied with pup pieces having a minimum length of 100mm.

Studded end valves are not allowed. Where space limitation requires installation of such valves, permission shall be obtained from the WP/HPCL.

Valves flange pressure class rating shall be in accordance with ASME B16.5.

Valves shall be tested as per API 6D or as specified in the Job Specification. The hydrostatic shell test pressure shall be 1.5 times the rated ASME Class design pressure. Hydrostatic seat test pressure shall be the operating design pressure. Hydrostatic seat test for bi-directional valves shall be carried out in both directions. Allowable leakage rates shall be as per Standard/Job Specification.

Valves which are identified as being lockable in open or closed position shall be fitted with attachments to permit the valve to be securely locked by a padlock or any suitable device. The attachments shall be secured to the valve body and hand wheel on lever in such a manner so as to prevent un-authorized removal or release.

Hydrostatic test fluid shall have a chlorine content of less than 200ppm for carbon steel valves and less than 30ppm for stainless steel valves.

Material certificate per BS EN 10204 Type 3.1 or COMPANY approved certificate shall be provided for all the pressure containing parts of the valves.

All valves shall be shipped in the closed position except ball valves, which shall be shipped in the open position.

Valve ends and stuffing box shall be covered with close fitting protectors (e.g. plastic caps) to protect the machined parts and prevent ingress of dirt and moisture.

All valves shall be marked in accordance with MSS SP-25.

### 4.6.2 Ball Valves

All ball valves in hydrocarbon service shall be certified “fire-safe” in accordance with API 607/API 6FA/BS EN ISO 10497. Test certification shall be provided by the valve manufacturer to verify the valve performance.

Vents or drains requirement for floating ball valves is as per API 6D.

For trunnion mounted ball valves, vent and drain connection shall have additional valve with plug/blind flange & it shall be as per MSS SP45.

All trunnion mounted ball valves shall be double block & bleed type.

Ball valves shall be reduced bore unless specifically stated in P&IDs. Valve bodies of either 1 or 2 piece construction shall be used.

All ball valves over 2" shall incorporate anti-static feature ensuring electrical continuity between ball, stem and body. For ball valves 2" and smaller electrical continuity is required between valve stem and body. Use of conductive stem seal is not permitted as the sole means of achieving the anti-static function.

Ball valves shall be fitted with blow-out proof stems and have the body split outside the plane of the stem protrusion. Trunnion mounted balls shall have body cavity relief. Stem seal covers shall be bolted. Valve stems shall be designed so that the stem “weak point” is outside of the valve body.

Sealant injection system shall be provided for trunnion mounted ball valves as per API 6D.

### 4.6.3 Globe Valves

Pressure/temperature ratings and valve design shall meet minimum ASME B16.34 requirements.

The minimum requirement for valve trim for carbon steel valve bodies is 13% chrome.

Unless specified otherwise, straight plug designs only are acceptable.

### 4.6.4 Check Valves

Flow direction of the valve shall be clearly marked on the valve body.

For swing check valves, the disk shall be secured in the closed or open position to prevent damage during transport and handling.

### 4.6.5 Gate Valves

Gate Valves shall be solid wedge types with solid disc or flexible wedge disc. Split wedge gates are not permitted.

For Gate valve sizes 1.1/2" and smaller, where operating torque is not a concern, solid wedge discs shall be used.

For gate valve sizes 2" and larger, higher operating torques and possibilities of sticking of gate due to differential temperatures shall be considered. Accordingly, flexible wedge 'H' type discs shall be used.

Where corrosion or erosion of seat material is possible due to entrapped fluid between the 'H' type disc and the seat, simple flexible wedge discs shall be used.

Wedge shall be made from one solid piece of material (mono block construction).

### 4.6.6 Plug Valves

Plug valves shall be regular type unless specifically stated in P&ID.

Soft-seated plug valves (suitably selected based on temperatures handled) shall be supplied with antistatic devices.

Each valve shall be supplied with a lever / wrench except for gear operated.

### 4.6.7 Double Block & Bleed Valves

Reduced bore ball valve with needle valve as a bleeder shall be used in DBB valve unless specifically stated in P&ID as per API 6D.

### 4.6.8 Double Block & Bleed and Double Isolation Valves

Single valve with two seating surfaces, each of which, in the closed position, provides a seal against pressure from a single source, with a means of venting/bleeding the cavity between the seating surfaces.

Double Block & Bleed and Double Isolation Plug valve with in position seal replacement shall have sufficient clearance between ground/grade level & valve bottom for removal of seals.

The mechanical wedge action of the twin seal plug compresses both the upstream & downstream seals firmly against the valve body, needing no help from the valve body. Twin seal valve holds

with consistent zero-leakage. The big advantage of twin seal's design is that it permits in-line servicing by simply removing the valve bonnet or lower plate (after the line is depressurized & drained).

Valves shall have weatherproof operators with mechanical position indicators.

Valve design shall allow sealing slips to be replaced from the bottom on sizes 3" & above.

Valve shall be supplied with manually operated bleed valves that can be opened to verify the plug valve is not leaking in the closed position.

### 4.6.9 Butterfly Valves

Butterfly valve shall be wafer type for utility services only.

Each valve shall be supplied with a lever/wrench except for gear operated valves.

Butterfly valves shall be suitable for throttling application.

Use of soft seated butterfly valves shall be suitably selected based on temperatures handled & shall be supplied with antistatic devices.

### 4.6.10 Inspection and Testing

**Pressure testing:**

Each valve shall be pressure tested in accordance with the requirements of API 6D and API 598. The maximum chloride content of the water for hydrotesting of Stainless Steel valves shall be 30ppm.

**Non-destructive testing:**

Inspection of valve components shall be in accordance with the following:

a) **150# & 300#**

| INSPECTION | APPLICABLE AREAS | PERCENTAGE OF TESTING | | |
|---|---|---|---|---|
| | | Carbon Steel | Stainless Steel | Non-Ferrous |
| Visual | All Materials and Welds | 100 | 100 | 100 |
| Radiography | Castings – Critical Areas | 100 | 100 | 100 |
| | Welds | 100 | 100 | 100 |
| | Weld Repairs | 100 | 100 | 100 |
| Magnetic Particle / Dye | Forgings | 100 | 100 | 100 |

| INSPECTION | APPLICABLE AREAS | PERCENTAGE OF TESTING | | |
|---|---|---|---|---|
| | | Carbon Steel | Stainless Steel | Non-Ferrous |
| Penetrant (MP/DP) | Castings | 100 | 100 | 100 |
| | Welds | 100 for DP/10 for MP | 100 for DP/10 for MP | 100 for DP/ 10 for MP |
| | Weld Overlays | 100 | 100 | 100 |

b) **600# & 900#**

| INSPECTION | APPLICABLE AREAS | PERCENTAGE OF TESTING | | |
|---|---|---|---|---|
| | | Carbon Steel | Stainless Steel | Non-Ferrous |
| Visual | All Materials and Welds | 100 | 100 | 100 |
| Radiography | Castings – Critical Areas | 100 | 100 | 100 |
| | Welds and Weld Repairs | 100 | 100 | 100 |
| Magnetic Particle / Dye Penetrant (MP/DP) | Forgings | 100 | 100 | 100 |
| | Castings | 100 | 100 | 100 |
| | Welds and Weld Overlays | 100 | 100 | 100 |

NDE of pipe and fittings shall be in accordance with the nominated specification and any supplementary requirements specified.

**Radiography:**

The radiographic technique employed shall be in accordance with the recommendation of ASME V Article 2 and ASME V Article 3 for castings. Acceptance criteria shall be as specified in ASME B16.34 Annex B with the additional requirements that no cracks or crack like defects are acceptable.

**Magnetic particle inspection:**

The magnetic particle inspections shall be applied using the detailed requirements, methods, procedures and qualifications specified in ASME V Article 7. The wet particle technique using background paint shall be adopted and the magnetizing technique shall be appropriate to the component being inspected. Acceptance criteria shall be as described in ASME VIII, Division 1 and Appendix 7. In Addition linear defects shall be limited to a maximum of 3 mm.

**Liquid penetrant examination:**

The liquid penetrant examination shall be applied using the detailed requirements, methods, procedures and qualifications specified in ASME V Article 6. Acceptance criteria shall be as specified for magnetic particle inspection.

**Ultrasonic examination:**

The ultrasonic examination shall be applied using the detailed requirements, methods, procedures and qualifications specified in ASME V Article 5. Acceptance criteria shall be as specified in ASME B16.34 Annex E.

**Weld repairs to valves:**

Weld repair to valves are not allowed.

Others:

Tests and certification as required by OISD-STD-130

## 5 CERTIFICATIONS

Contractor / Manufacturer shall provide certification to verify that the materials of construction meet the requirements of the material specifications.

Certificates to BS EN 10204 incorporating requirements for documentation and marking are designated as Type A, Type B and Type C. Conformance with EN 10204 is required and clarified as follows:

### 5.1 Type A Certificate

Reports/Certificates to BS EN 10204 2.2, BS EN 10204 2.3 or equivalent.

Material welded to pressure containing components shall be certified to the same degree as the pressure containing component.

## 5.2 Type B Certificate

Work Certificate to BS EN 10204 3.1 or equivalent

## 5.3 Type C Certificate

Certificate to BS EN 10204 3.2 or equivalent

## 5.4 Certification Guidelines

The Vendor shall ensure that appropriate certification, showing mill heat or batch markings, is received for all furnished materials. Materials furnished without documentation are unacceptable.

All certificates shall contain the following information:

a) Name of manufacturer.
b) Purchase order number and date.
c) Manufacturer's order number.
d) Identification number of certificate and its date of issue.
e) Material specification.
f) Dimensions.
g) Material charge number, batch number or heat-lot number.
h) Mechanical properties recorded from test results.
i) Chemical composition recorded from chemical analyses.
j) NDT methods and results, where applicable.
k) Heat treatment procedures and records, where applicable.

### 5.4.1 Type A Certificate

| | |
|---|---|
| Gasket | All gaskets (where required) |

### 5.4.2 Type B Certificate

| | |
|---|---|
| Piping/Fittings and Flanges | All piping and associated fittings other than for type C Certificate. |
| Fasteners | All studs and nuts for flanges |

### 5.4.3 Type C Certificate

All piping within the main transportation system (i.e. pipeline and fittings).

## 6 CLASS DESIGNATION CODE

The class designation shall consist of not more than three components made up of a letter, number & letter; e.g. A1X.

The first letter indicates pressure rating.

| | | | | | |
|---|---|---|---|---|---|
| A | 150 Class | D | 600 Class | G | 2500 Class |
| B | 300 Class | E | 900 Class | J | 125/150 Class |
| C | 400 Class | F | 1500 Class | | |

The middle number indicates difference in the specifications within the same rating and material as enlisted below.

| Middle Number | Carbon Steel | SS 316 | SS 316 |
|---|---|---|---|
| 1 | CA=1.5 | CA=NIL | CA=NIL |
| 2 | CA=1.5 (IBR) | CA=NIL | CA=NIL |

The third letter indicates type of material.

X Carbon Steel (A106 / A672)
Y SS 316
U IS material (IS1239 / IS3589)

## 7 PIPING CLASS & SERVICE SUMMARY

| Sl. No. | Piping Class | Service | Piping Code | Material | Design Pressure (Barg) | Design Temp. (°C) | ASME Flange Rating | C.A. (mm) | Valve Trim |
|---|---|---|---|---|---|---|---|---|---|
| 1 | A1X | Motor Spirit (MS), High Speed Diesel (HSD), Superior Kerosene Oil (SKO), Aviation Turbine Fuel (ATF), Naphtha, Process Drains | ASME B31.3 | A106 Gr. B / API 5L Gr. B PSL2 | 3.5 | 65°C | 150 RF | 1.5 | 13% Cr. (Min.) |
| 2 | A1U | Fire Water & Utility Water | ASME B31.3 | IS 1239 / IS 3589 | 10 | 65°C | 150 RF | 1.5 | 13% Cr. (Min.) |
| 3 | A1Y | Chemical Dosing | ASME B31.3 | A312 TP316 / A358 TP316 | 10 | 65°C | 150 RF | - | SS 316 |
| 4 | D1X | Motor Spirit (MS), High Speed Diesel (HSD), Superior Kerosene Oil (SKO), Aviation Turbine Fuel (ATF), Naphtha | ASME B31.3 | A106 Gr.B / API 5L Gr. X52 PSL2 | 85 | 65°C | 600 RF | 1.5 | 13% Cr. (Min.) |
| 5 | E1X | Motor Spirit (MS), High Speed Diesel (HSD), Superior Kerosene Oil (SKO), Aviation Turbine Fuel (ATF), Naphtha | ASME B31.3 | A106 Gr.B / API 5L Gr. X52 PSL2 | 100 | 65°C | 900 RTJ | 1.5 | 13% Cr. (Min.) |

## 8 PIPE CLASSES

| CLASS A1X | PIPING MATERIAL SPECIFICATION | | | | | | |
|---|---|---|---|---|---|---|---|
| SERVICE | Motor Spirit, High Speed Diesel, Superior Kerosene Oil, Aviation Turbine Fuel, Naphtha, Process Drains | | | | | CORROSION ALLOWANCE | 1.5 mm |
| RATING | ASME 150# | | | | | PIPING MATERIAL | C.S. – GROUP 1.1 |
| SERVICE LIMITS | Pressure (Barg) | 19.6 | 19.2 | 17.7 | 15.8 | RADIOGRAPHY | 100% |
| | Temperature ($^0$C) | 0-38 | 50 | 100 | 150 | STRESS RELIEF | PER B31.3 REQUIREMENTS |

| ITEMS | NPS SIZES FROM | NPS SIZES TO | RATING/ SCH | ENDS | MATERIAL | COMMODITY CODE |
|---|---|---|---|---|---|---|
| BALL VALVE | 1/2” | 1½” | 800 | SW | BODY/BONNET – A105N, TRIM – 13Cr, SEAT & SEAL PTFE, DIMENSION / DESIGN – MFR. STD. / BS EN ISO 17292, API 6D. FLOATING BALL, REDUCED BORE, LO | BA-C804-R |
| | 2” | 4” | 150 | RF | BODY/BONNET – ASTM A216 WCB, TRIM – 13Cr, SEAT & SEAL PTFE, DIMENSIONS / DESIGN - B16.10 / BS EN ISO 17292, API 6D. FLOATING BALL, REDUCED BORE, LO | BA-C100-R |
| | 6” | 24” | 150 | RF | BODY/BONNET – ASTM A216 WCB, TRIM – 13Cr, SEAT & SEAL PTFE, DIMENSIONS / DESIGN AS PER B16.10 / BS EN ISO 17292, API 6D. TRUNNION BALL, REDUCED BORE, GEAR OPERATED | BA-C110-RG |
| GATE VALVE | 1/2” | 1½” | 800 | SW | BODY/BONNET – ASTM A105N,TRIM – 13% Cr, DIMENSIONS / DESIGN AS PER MFR. STD. / API 602, HW OPERATED | GA-C804 |
| | 2” | 6” | 150 | RF | BODY/BONNET – ASTM A216 WCB, TRIM – 13% Cr, DIMENSIONS / DESIGN AS PER B16.10 / API 600, HW OPERATED | GA-C110 |
| | 8” | 24” | 150 | RF | BODY/BONNET – ASTM A216 WCB, TRIM – 13% Cr, DIMENSIONS / DESIGN AS PER B16.10 / API 600, GEAR OPERATED | GA-C110-G |
| GLOBE VALVE | 1/2” | 1½” | 800 | SW | BODY/BONNET – ASTM A105N, TRIM – 13% Cr, DIMENSIONS / DESIGN AS PER MFR. STD. / API 602, HW OPERATED | GL-C804 |

| | | | | | | |
|---|---|---|---|---|---|---|
| | 2” | 4” | 150 | RF | BODY/BONNET – ASTM A216 WCB, TRIM – 13% Cr, DIMENSIONS / DESIGN AS PER B16.10 / BS1873, HW OPERATED | GL-C100 |
| | 6” | 12” | 150 | RF | BODY/BONNET – ASTM A216 WCB, TRIM – 13% Cr, DIMENSIONS / DESIGN AS PER B16.10 / BS1873, GEAR OPERATED | GL-C100-G |
| PLUG VALVE | 1/2” | 1½” | 800 | SW | BODY – ASTM A105N, TRIM – TRIM – 13Cr, SLEEVE & SEAL PTFE, TO BS 5353 / API 599, REGULAR PORT, LO | PL-C804 |
| | 2” | 2” | 150 | RF | BODY – ASTM A216 GR. WCB, TRIM – 13Cr, SLEEVE & SEAL PTFE, DESIGN BS 5353 /API 599, REGULAR PORT, LO | PL-C100 |
| CHECK VALVE | 1/2” | 1½” | 800 | SW | LIFT TYPE, BODY – A105N, TRIM 13% Cr, DIMENSIONS / DESIGN AS PER MFR. STD. / API 602 | CH-C814 |
| | 2” | 4” | 150 | RF | SWING TYPE, BODY A216 WCB, TRIM 13% Cr, DIMENSIONS / DESIGN AS PER B16.10 / BS 1868 | CH-C100 |
| | 6” | 24” | 150 | RF | DUAL PLATE LUG TYPE, BODY A216 WCB, TRIM 13% Cr TO API 594 | CH-C130 |
| DOUBLE BLOCK & BLEED VALVE | 2” | 2” | 150 | RF X FNPT | CS BODY, SS 316 TRIM, PTFE, REDUCED BORE BALL VALVE WITH NEEDLE BLEEDER VALVE, ½” FNPT INST. CONN., API 6D, LO | DB-C108 |
| DOUBLE BLOCK & BLEED AND DOUBLE ISOLATION VALVE | 6” | 24” | 150 | RF | TWIN SEAL PLUG TYPE, BODY/BONNET - A216 GR. WCB, PLUG - ASTM A216 GR. WCB CASE HARDENED & 75 MICRONS ENP, VITON SEAL, API 6D, GEAR OP. | DI-C100-G |
| PIPE | 1/2” | 1½” | SCH. 80 | PE | ASTM A106 Gr. B, SEAMLESS, TO ASME B36.10M | PA01A01A |
| | 2” | 6” | SCH. 40 | BE | ASTM A106 Gr. B, SEAMLESS, TO ASME B36.10M | PA01A01B |
| | 8” | 14” | SCH. 20 | BE | ASTM A106 Gr. B, SEAMLESS, TO ASME B36.10M | PA01A01B |
| | 16” | 24” | SCH. 20 | BE | ASTM A672 Gr. B60, CL. 12, EFW, TO ASME B36.10M | PA17B01B |
| NIPPLE | 1/2” | 1½” | SCH. 80 | PBE | ASTM A106 Gr. B, SEAMLESS, TO ASME B36.10M, 100MM LENGTH | PB01A01L |

| | | | | | | | |
|---|---|---|---|---|---|---|---|
| FITTINGS (NOTE 1) | ELBOW 45 | 1/2” | 1½” | 3000 | SW | ASTM A105N AS PER ASME B16.11 | PC05C03C |
| | | 2” | 14” | AS PER PIPE | BW | ASTM A234 Gr. WPB SEAMLESS AS PER ASME B16.9 | PC06A04D |
| | | 16” | 24” | AS PER PIPE | BW | ASTM A234 Gr. WPB WELDED AS PER ASME B16.9 | PC06B04D |
| | ELBOW 90 | 1/2” | 1½” | 3000 | SW | ASTM A105N AS PER ASME B16.11 | PD05C03C |
| | | 2” | 14” | AS PER PIPE | BW | ASTM A234 Gr. WPB SEAMLESS AS PER ASME B16.9 | PD06A04D |
| | | 16” | 24” | AS PER PIPE | BW | ASTM A234 Gr. WPB WELDED AS PER ASME B16.9 | PD06B04D |
| | SOCKOLET | 1/2” | 1½” | 3000 | SW | ASTM A105N AS PER MSS SP-97 | PW05C21C |
| | WELDOLET | 2” | 24” | AS PER PIPE | BW | ASTM A105N AS PER MSS SP-97 | PK05X21D |
| | TEE | 1/2” | 1½” | 3000 | SW | ASTM A105N AS PER ASME B16.11 | PI05C03C |
| | | 2” | 14” | AS PER PIPE | BW | ASTM A234 Gr. WPB SEAMLESS AS PER ASME B16.9 | PI06A04D |
| | | 16” | 24” | AS PER PIPE | BW | ASTM A234 Gr. WPB WELDED AS PER ASME B16.9 | PI06B04D |
| | REDUCING TEE | 3/4” | 1½” | 3000 | SW | ASTM A105N AS PER ASME B16.11 | PJ05C03C |
| | | 2” | 14” | AS PER PIPE | BW | ASTM A234 Gr. WPB SEAMLESS AS PER ASME B16.9 | PJ06A04D |
| | | 16” | 24” | AS PER PIPE | BW | ASTM A234 Gr. WPB WELDED AS PER ASME B16.9 | PJ06B04D |
| | CAP | 1/2” | 1½” | 3000 | SW | ASTM A105N AS PER ASME B16.11 | PO05C03C |
| | | 2” | 14” | AS PER PIPE | BW | ASTM A234 Gr. WPB SEAMLESS AS PER ASME B16.9 | PO06A04D |
| | | 16” | 24” | AS PER PIPE | BW | ASTM A234 Gr. WPB WELDED AS PER ASME B16.9 | PO06B04D |
| | COUPLING FULL | 1/2” | 1½” | 3000 | SW | ASTM A105N AS PER ASME B16.11 | PM05C03C |
| | REDUCER CONC. | 3” | 14” | AS PER PIPE | BW | ASTM A234 Gr. WPB SEAMLESS AS PER ASME B16.9 | PE06A04D |
| | | 16” | 24” | AS PER PIPE | BW | ASTM A234 Gr. WPB WELDED AS PER ASME B16.9 | PE06B04D |

| | | | | | | | |
|---|---|---|---|---|---|---|---|
| | REDUCER ECC. | 3” | 14” | AS PER PIPE | BW | ASTM A234 Gr. WPB SEAMLESS AS PER ASME B16.9 | PG06A04D |
| | | 16” | 24” | AS PER PIPE | BW | ASTM A234 Gr. WPB WELDED AS PER ASME B16.9 | PG0B04D |
| | SWAGE CONC. | 3/4” | 3” | AS PER PIPE | PBE | ASTM A105N, SEAMLESS, MSS SP-95 | PF05A20N |
| | SWAGE ECC. | 3/4” | 3” | AS PER PIPE | PBE | ASTM A105N, SEAMLESS, MSS SP-95 | PH05A20N |
| FLANGES | | 1/2” | 1½” | 150 | SWRF | ASTM A105N AS PER ASME B16.5 | PB05A05A |
| | | 2” | 24” | 150 | WNRF | ASTM A105N AS PER ASME B16.5, SCH TO MATCH PIPE | PC05A05A |
| | | 1/2” | 1½” | 300 | SWRF | ASTM A105N AS PER ASME B16.5 | PB05B05A |
| | | 2” | 24” | 300 | WNRF | ASTM A105N AS PER ASME B16.5, SCH TO MATCH PIPE | PC05B05A |
| BLIND FLANGES | | 1/2” | 24” | 150 | RF | ASTM A105N AS PER ASME B16.5 | PA05A05A |
| | | 1/2” | 24” | 300 | RF | ASTM A105N AS PER ASME B16.5 | PA05B05A |
| SPECTACLE BLIND | | 1/2” | 12” | 150 | RF | ASTM A105N AS PER ASME B16.48 | PG05A06A |
| BLIND & SPACER | | 14” | 24” | 150 | RF | ASTM ASTM A516 GR. 70 AS PER ASME B16.48 | PH09A06A |
| ORIFICE FLANGE | | 2” | 24” | 300 | WNRF | ASTM A105N AS PER ASME B16.36 | PJ05B25A |
| GASKET | | 1/2” | 24” | 150 | | 4.5mm THK, SPIRAL WOUND, SS316+GRAPHITE WITH SOFT STEEL CENTERING RING TO ASME B16.20 | PR12E07B |
| GASKET | | 1/2” | 24” | 300 | | 4.5mm THK, SPIRAL WOUND, SS316+GRAPHITE WITH SOFT STEEL CENTERING RING TO ASME B16.20 | PR12F07B |
| STUDS / NUTS | | STUD BOLTS, ASTM A193 Gr.B7 / 194 Gr.2H FULL LENGTH THREAD WITH TWO HEXAGONAL NUTS AS PER ASME B18.2.1/18.2.2 | | | | | PS14X09A |

NOTE 1: FOR BRANCHING TABLE REFER APPENDIX A.

| CLASS A1U | PIPING MATERIAL SPECIFICATION | | | | | | |
|---|---|---|---|---|---|---|---|
| SERVICE | Fire Water & Utility Water | | | | | CORROSION ALLOWANCE: 1.5 mm | |
| RATING | ASME 150# | | | | | PIPING MATERIAL | CS – GROUP 1.1 |
| SERVICE LIMITS | Pressure (Barg) | 10 | | | | RADIOGRAPHY | NIL |
| | Temperature $^0$C | 65 | | | | STRESS RELIEF | PER B31.3 REQUIREMENTS |

| ITEMS | NPS SIZES FROM | NPS SIZES TO | RATING/ SCH | ENDS | MATERIAL | COMMODITY CODE |
|---|---|---|---|---|---|---|
| BALL VALVE | 1/2” | 1½” | 800 | SCRD | BODY/BONNET – ASTM A105N, TRIM - TRIM – 13Cr, SEAT & SEAL PTFE, DIMENSIONS / DESIGN PER MFR. STD. / BS EN ISO 17292, API 6D, FLOATING BALL, REDUCED BORE, LO | BA-C803-R |
| | 2” | 4” | 150 | RF | BODY/BONNET – ASTM A216 WCB, TRIM – 13Cr, SEAT & SEAL PTFE, DIMENSIONS / DESIGN AS PER B16.10 / BS EN ISO 17292, API 6D, FLOATING BALL, REDUCED BORE, LO | BA-C100-R |
| | 6” | 14” | 150 | RF | BODY/BONNET – ASTM A216 WCB, TRIM – 13Cr, SEAT & SEAL PTFE, DIMENSIONS / DESIGN AS PER B16.10 / BS EN ISO 17292, API 6D. TRUNNION, REDUCED BORE, GEAR OPERATED | BA-C110-RG |
| GATE VALVE | 1/2” | 1½” | 800 | SCRD | BODY/BONNET – ASTM A105N, TRIM – 13% Cr, DIMENSIONS / DESIGN PER MFR. STD. / API 602, HW | GA-C803 |
| | 2” | 6” | 150 | RF | BODY/BONNET – ASTM A216 WCB, TRIM – 13% Cr, DIMENSIONS / DESIGN PER B16.10 / API 600, HW | GA-C110 |
| | 8” | 14” | 150 | RF | BODY/BONNET – ASTM A216 WCB,TRIM – 13% Cr, DIMENSIONS / DESIGN AS PER ASME B16.10 / API 600, GEAR OPERATED | GA-C110-G |
| GLOBE VALVE | 1/2” | 1½” | 800 | SCRD | BODY/BONNET – ASTM A105N, TRIM – 13% Cr, DIMENSIONS / DESIGN PER MFR. STD. / API 602, HW | GL-C803 |
| | 2” | 4” | 150 | RF | BODY/BONNET – ASTM A216 WCB, TRIM – 13% Cr, DIMENSIONS / DESIGN AS PER B16.10 / BS1873, HW | GL-C100 |
| | 6” | 12” | 150 | RF | BODY/BONNET – ASTM A216 WCB, TRIM – 13% Cr, DIMENSIONS / DESIGN AS PER ASME B16.10 / BS1873, GEAR OPERATION | GL-C100-G |

| | | | | | | | |
|---|---|---|---|---|---|---|---|
| CHECK VALVE | | 1/2” | 1½” | 800 | SCRD | LIFT TYPE, BODY – A105N, TRIM 13% Cr, DIMENSIONS / DESIGN AS PER MFR. STD. / API 602 | CH-C813 |
| | | 2” | 4” | 150 | RF | SWING TYPE, BODY A216 WCB, TRIM 13% Cr, DIMENSIONS / DESIGN AS PER B16.10 / BS 1868 | CH-C100 |
| | | 6” | 14” | 150 | RF | DUAL PLATE LUG TYPE, BODY A216 WCB, TRIM 13% Cr TO API 594 | CH-C130 |
| BUTTERFLY VALVE | | 3” | 6” | 150 | RF | DUAL PLATE WAFER TYPE; BODY A216 WCB, TRIM 13% Cr, PTFE, AS PER API 609, LO | BU-C110 |
| | | 8” | 14” | 150 | RF | DUAL PLATE WAFER TYPE; BODY A216 WCB, TRIM 13% Cr, PTFE, AS PER API 609, GEAR OPERATED | BU-C110-G |
| PIPE | | 1/2” | 1½” | HVY | SCRD | IS 1239 BLACK PIPE, ERW | PA10D23E |
| | | 2” | 6” | HVY | BE | IS 1239 BLACK PIPE, ERW | PA10D23B |
| | | 8” | 12” | 6mm | BE | IS 3589 GR.330, ERW | PA11D24B |
| | | 14” | 14” | 8mm | BE | IS 3589 GR.330, ERW | PA11D24B |
| NIPPLE | | 1/2” | 1½” | HVY | TBE | IS 1239 BLACK PIPE, ERW, 100mm LENGTH | PB10D23M |
| FITTINGS (NOTE 1) | ELBOW 45 | 1/2” | 1½” | 3000 | SCRD | ASTM A105N AS PER ASME B16.11 | PC05C03E |
| | | 2” | 14” | AS PER PIPE | BW | ASTM A234 Gr. WPB SEAMLESS, ASME B16.9 | PC06A04D |
| | ELBOW 90 | 1/2” | 1½” | 3000 | SCRD | ASTM A105N AS PER ASME B16.11 | PD05C03E |
| | | 2” | 14” | AS PER PIPE | BW | ASTM A234 Gr. WPB SEAMLESS, ASME B16.9 | PD06A04D |
| | THREADOLET | 1/2” | 1½” | 3000 | SCRD | ASTM A 105N AS PER MSS SP-97 | PX05C21E |
| | WELDOLET | 2” | 14” | AS PER PIPE | BW | ASTM A 105N AS PER MSS SP-97 | PK05X21D |
| | TEE | 1/2” | 1½” | 3000 | SCRD | ASTM A105N AS PER ASME B16.11 | PI05C03E |
| | | 2” | 14” | AS PER PIPE | BW | ASTM A234 Gr. WPB SEAMLESS, ASME B16.9 | PI06A04D |
| | REDUCING TEE | 1/2” | 1½” | 3000 | SCRD | ASTM A105N AS PER ASME B16.11 | PJ05C03E |
| | | 2” | 14” | AS PER PIPE | BW | ASTM A234 Gr. WPB SEAMLESS, ASME B16.9 | PJ06A04D |
| | CAP | 1/2” | 1½” | 3000 | SCRD | ASTM A105N AS PER ASME B16.11 | PO05C03E |

| | | | | | | | |
|---|---|---|---|---|---|---|---|
| | | 2” | 14” | AS PER PIPE | BW | ASTM A234 Gr. WPB SEAMLESS, ASME B16.9 | PO06A04D |
| | COUPLING FULL | 1/2” | 1½” | 3000 | SCRD | ASTM A105N AS PER ASME B16.11 | PM05C03E |
| | HALF COUPLING | 1/2” | 1½” | 3000 | SCRD | ASTM A105N AS PER ASME B16.11 | PL05C03E |
| | UNION | 1/2” | 1½” | 3000 | SCRD | ASTM A105N AS PER ASME BS 3799 | PT05C20E |
| | REDUCER CONC. | 3” | 14” | AS PER PIPE | BW | ASTM A234 Gr. WPB SEAMLESS, ASME B16.9 | PE06A04D |
| | REDUCER ECC. | 3” | 14” | AS PER PIPE | BW | ASTM A234 Gr. WPB SEAMLESS, ASME B16.9 | PG06A04D |
| | SWAGE CONC. | 3/4” | 3” | AS PER PIPE | TBE | ASTM A105N, SEAMLESS AS PER MSS SP-95 | PF05A20P |
| | SWAGE ECC. | 3/4” | 3” | AS PER PIPE | TBE | ASTM A105N, SEAMLESS AS PER MSS SP-95 | PH05A20P |
| FLANGES | | 1/2” | 1½” | 150 | SCRD | ASTM A105N AS PER ASME B16.5 | PE05A05A |
| | | 2” | 14” | 150 | SORF | A105N AS PER ASME B16.5, SCH TO MATCH PIPE | PC05A05A |
| BLIND FLANGES | | 1/2” | 14” | 150 | RF | ASTM A105N PER ASME B16.5 | PA05A05A |
| SPECTACLE BLIND | | 1/2” | 12” | 150 | RF | ASTM A105N PER ASME B16.48 | PG05A06A |
| BLIND & SPACER | | 14” | 14” | 150 | RF | ASTM A516 GR. 70 PER ASME B16.48 | PH09A06A |
| ORIFICE FLANGE | | 1” | 14” | 300 | RF | ASTM A105N PER ASME B16.36 | PJ05B25A |
| GASKETS | | 1/2” | 14” | 150 | | 3mm THK, CNAF TO ASME B16.21 | PQ13E08A |
| STUDS / NUTS | | STUD BOLTS, ASTM A193 Gr.B7 /194 Gr.2H FULL LENGTH THREAD WITH TWO HEXAGONAL NUTS AS PER ASME B18.2.1/18.2.2 | | | | | PS14X09A |

NOTE 1: FOR BRANCHING TABLE REFER APPENDIX A.

| CLASS A1Y | PIPING MATERIAL SPECIFICATION | | | | | | | |
|---|---|---|---|---|---|---|---|---|
| SERVICE | Chemical Dosing | | | | | | CORROSION ALLOWANCE | 0 mm |
| RATING | ASME 150# | | | | | | PIPING MATERIAL | SS 316 –GROUP – 2.1. |
| SERVICE LIMITS | Pressure (Barg) | | 19 | 18.4 | 16.2 | 14.8 | RADIOGRAPHY | RANDOM |
| | Temperature ($^0$C) | | 38 | 50 | 100 | 150 | STRESS RELIEF | PER B31.3 REQUIREMENTS |
| ITEMS | NPS SIZES | | RATING/ SCH | ENDS | MATERIAL | | | COMMDITY CODE |
| | FROM | TO | | | | | | |
| BALL VALVE | 1/2” | 1½” | 800 | SW | BODY/BONNET– ASTM A182 F316, TRIM SS 316, SEAL PTFE, DIMENSIONS/DESIGN AS PER MFR. STD. / BS EN ISO 17292, API 6D. FLOATING BALL, REDUCED BORE, LEVER OPERATED | | | BA-S804-R |
| | 2” | 4” | 150 | RF | BODY/BONNET– ASTM A351 CF8M, TRIM SS 316 SEALS PTFE. DIMENSIONS/DESIGN AS PER B16.10 / BS EN ISO 17292, API 6D. FLOATING BALL, REDUCED BORE, LEVER OPERATED | | | BA-S100-R |
| | 6” | 12” | 150 | RF | BODY/BONNET– ASTM A351 CF8M, TRIM SS 316, SEAL PTFE, DIMENSIONS/DESIGN AS PER B16.10 / BS EN ISO 17292, API 6D, TRUNNION MOUNTED, REDUCED BORE, GEAR OP. | | | BA-S110-RG |
| GATE VALVE | 1/2” | 1½” | 800 | SW | BODY/BONNET – ASTM A182 F316, TRIM SS 316, DIMENSIONS / DESIGN AS PER MFR. STD. / API 602, HW OPERATED | | | GA-S804 |
| | 2” | 6” | 150 | RF | BODY/BONNET – ASTM A351 CF8M, TRIM SS 316, DIMENSIONS / DESIGN AS PER ASME B16.10 / API 600, HW OPERATED | | | GA-S110 |
| | 8” | 12” | 150 | RF | BODY/BONNET – ASTM A351 CF8M, TRIM SS 316, DIMENSIONS / DESIGN AS PER ASME B16.10 / API 600, GEAR OPERATED | | | GA-S110-G |
| GLOBE VALVE | 1/2” | 1½” | 800 | SW | BODY/BONNET - ASTM A182 F316, TRIM SS 316, DIMENSIONS/DESIGN PER MFR. STD. / API 602, HW OPERATED | | | GL-S804 |
| | 2” | 4” | 150 | RF | BODY/BONNET, ASTM A351 CF8M, TRIM SS 316, DIMENSIONS/DESIGN - B16.10 / BS1873, HW OP. | | | GL-S100 |

| | | | | | | | |
|---|---|---|---|---|---|---|---|
| | | 6” | 12” | 150 | RF | BODY/BONNET, ASTM A351 CF8M, TRIM SS 316, DIMENSIONS/DESIGN AS PER B16.10 / BS1873, GEAR OPERATED | GL-S100-G |
| PLUG VALVE | | 1/2” | 1½” | 150 | SW | BODY A182 F316, TRIM SS 316, SLEEVE & SEAL PTFE, BS 5353 / API 599, REGULAR PATTERN | PL-S100 |
| CHECK VALVE | | 1/2” | 1½” | 800 | SW | LIFT TYPE, BODY – A182 F316, TRIM SS 316, DIMENSIONS / DESIGN PER MFR. STD. / API 602 | CH-S814 |
| | | 2” | 4” | 150 | RF | SWING TYPE, BODY A351 CF8, TRIM SS 316, DIMENSIONS / DESIGN AS PER B16.10/ BS 1868 | CH-S100 |
| | | 6” | 12” | 150 | RF | DUAL PLATE LUG TYPE, BODY A351 CF8M, TRIM SS 316 AS PER API 594 | CH-S130 |
| DOUBLE BLOCK & BLEED VALVE | | 2” | 2” | 150 | RF X FNPT | BODY & TRIM – SS 316, PTFE, REDUCED BORE BALL VALVE WITH NEEDLE BLEEDER VALVE, ½” FNPT INST. CONN., API 6D | DB-S108 |
| PIPE | | 1/2” | 1½” | SCH 40S | PE | ASTM A312 TP316, Seamless, TO ASME B36.19M | PA03A02A |
| | | 2” | 2” | SCH 40S | BE | ASTM A 312 TP316, Seamless TO ASME B36.19M | PA03A02B |
| | | 3” | 12” | SCH 10S | BE | ASTM A 358 TP316, EFW, TO ASME B36.19M | PA04C02B |
| NIPPLE | | 1/2” | 1½” | AS PER PIPE | PBE | ASTM A312 TP316, Seamless, TO ASME B36.19M, 100MM LENGTH | PB03A02N |
| FITTINGS (NOTE 1) | ELBOW 45 | 1/2” | 1½” | 3000 | SW | ASTM A182 F316 AS PER ASME B16.11 | PC07C03C |
| | | 2” | 2” | AS PER PIPE | BW | ASTM A403 WP316 Seamless AS PER ASME B16.9 | PC08A04D |
| | | 3” | 12” | AS PER PIPE | BW | ASTM A403 WP316 Welded AS PER ASME B16.9 | PC08B04D |
| | ELBOW 90 | 1/2” | 1½” | 3000 | SW | ASTM A182 F316 AS PER ASME B16.11 | PD07C03C |
| | | 2” | 2” | AS PER PIPE | BW | ASTM A403 WP316 Seamless AS PER ASME B16.9 | PD08A04D |
| | | 3” | 12” | AS PER PIPE | BW | ASTM A403 WP316 Welded AS PER ASME B16.9 | PD08B04D |
| | SOCKOLET | 1/2” | 1½” | 3000 | PE | ASTM A182 F316 AS PER MSS SP-97 | PW07C21C |
| | WELDOLET | 2” | 12” | AS PER PIPE | BW | ASTM A182 F316 AS PER MSS SP-97 | PK07X21D |
| | TEE | 1/2” | 1½” | 3000 | SW | ASTM A182 F316 AS PER ASME B16.11 | PI07C03C |
| | | 2” | 2” | AS PER PIPE | BW | ASTM A403 WP316 Seamless AS PER ASME B16.9 | PI08A04D |

| | | | | | | | |
|---|---|---|---|---|---|---|---|
| | | 3” | 12” | AS PER PIPE | BW | ASTM A403 WP316 Welded AS PER ASME B16.9 | PI08B04D |
| | REDUCING TEE | 1/2” | 1½” | 3000 | SW | ASTM A182 F316 AS PER ASME B16.11 | PJ07C03C |
| | | 2” | 2” | AS PER PIPE | BW | ASTM A403 WP316 Seamless AS PER ASME B16.9 | PJ08A04D |
| | | 3” | 12” | AS PER PIPE | BW | ASTM A403 WP316 Welded AS PER ASME B16.9 | PJ08B04D |
| | CAP | 1/2” | 1½” | 3000 | SW | ASTM A182 F316 AS PER ASME B16.11 | PO07C03C |
| | | 2” | 2” | AS PER PIPE | BW | ASTM A403 WP316, Seamless AS PER ASME B16.9 | PO08A04D |
| | | 3” | 12” | AS PER PIPE | BW | ASTM A403 WP316 Welded AS PER ASME B16.9 | PO08B04D |
| | COUPLING FULL | 1/2” | 1½” | 3000 | SW | ASTM A182 F316, AS PER ASME B16.11 | PM07C03C |
| | REDUCER CONC. | 3” | 12” | AS PER PIPE | BW | ASTM A403 WP316 Seamless AS PER ASME B16.9 | PE08B04D |
| | REDUCER ECC. | 3” | 12” | AS PER PIPE | BW | ASTM A403 WP316 Seamless AS PER ASME B16.9 | PG08B04D |
| | SWAGE CONC. | 3/4” | 3” | AS PER PIPE | PBE | ASTM A182 F316 AS PER MSS SP-95 | PF08A20N |
| | SWAGE ECC. | 3/4” | 3” | AS PER PIPE | PBE | ASTM A182 F316 AS PER MSS SP-95 | PH08A20N |
| FLANGES | | 1/2” | 1½” | 150 | SWRF | ASTM A182 F 316 AS PER ASME B16.5 | PB07A05A |
| | | 2” | 12” | 150 | WNRF | ASTM A182 F 316, ASME B16.5 SCH TO PIPE | PC07A05A |
| BLIND FLANGES | | 1/2” | 12” | 150 | RF | ASTM A182 F 316 AS PER ASME B16.5 | PA07A05A |
| SPECTACLE BLIND | | 1/2” | 12” | 150 | RF | ASTM A240 TYPE 316 AS PER ASME B16.48 | PG16A06A |
| ORIFICE FLANGE | | 1” | 12” | 150 | WNRF | ASTM A182 F 316 AS PER ASME B16.36 | PJ07A25A |
| GASKET | | 1/2” | 12” | 150 | | 4.5mm THK, SPIRAL WOUND, SS316+GRAPHITE WITH SOFT STEEL CENTERING RING, B16.20 | PR12E07B |
| STUDS / NUTS | | STUD BOLTS, ASTM A193 Gr.B8M /194 Gr.8M FULL LENGTH THREAD WITH TWO HEXAGONAL NUTS WITH WASHER AS PER ASME B 18.2.1/18.2.2 | | | | | PS15X09A |

NOTE 1: FOR BRANCHING TABLE REFER APPENDIX A.

| CLASS D1X | PIPING MATERIAL SPECIFICATION | | | | | | |
|---|---|---|---|---|---|---|---|
| SERVICE | MS, HSD, SKO, ATF & Naphtha | | | | | CORROSION ALLOWANCE | 1.5mm |
| RATING | ASME 600# | | | | | PIPING MATERIAL | C.S. – GROUP 1.1 |
| SERVICE LIMITS | Pressure (Barg) | 85 | | | | RADIOGRAPHY | 100% |
| | Temperature $^0$C | 65 | | | | STRESS RELIEF | PER B31.3 REQUIREMENTS |

| ITEMS | NPS SIZES FROM | NPS SIZES TO | RATING / SCH | ENDS | MATERIAL | COMMODITY CODE |
|---|---|---|---|---|---|---|
| BALL VALVE | 1/2” | 1½” | 800 | SW | BODY/BONNET – A105N, TRIM - SS 316, SEAT & SEAL RPTFE, DIMENSIONS / DESIGN AS PER MFR. STD. / BS EN ISO 17292, API 6D. FLOATING BALL, REDUCED / FULL BORE, LO | BA-C804-R/ BA-C804-F |
| | 2” | 3” | 600 | RF | BODY/BONNET – ASTM A216 WCB, TRIM - SS 316, SEAT & SEAL RPTFE, DIMENSIONS / DESIGN AS PER B16.10 / BS EN ISO 17292, API 6D. FLOATING BALL, REDUCED / FULL BORE, LO | BA-C600-R/ BA-C600-F |
| | 4” | 24” | 600 | RF | BODY/BONNET – ASTM A216 WCB, TRIM - SS 316, SEAT & SEAL RPTFE. DIMENSIONS / DESIGN AS PER B16.10 / BS EN ISO 17292, API 6D. TRUNNION BALL, REDUCED / FULL BORE, GEAR OPERATED | BA-C610-RG / BA-C610-FG |
| GATE VALVE | 1/2” | 1½” | 800 | SW | BODY/BONNET – ASTM A105N, TRIM STELLITED, STEM-13% CR. STEEL, DIMENSIONS /DESIGN PER MFR. STD. / API 602, HW | GA-C804 |
| | 2” | 4” | 600 | RF | BODY/BONNET – ASTM A216 WCB, TRIM STELLITED, STEM-13% CR. STEEL, DIMENSIONS / DESIGN AS PER B16.10 / API 600, HW | GA-C610 |
| | 6” | 24” | 600 | RF | BODY/BONNET – ASTM A216 WCB, TRIM STELLITED, STEM-13% CR. STEEL, DIMENSIONS / DESIGN AS PER B16.10 / API 600, GEAR OPERATED | GA-C610-G |
| GLOBE VALVE | 1/2” | 1½” | 800 | SW | BODY/BONNET – ASTM A105N, TRIM STELLITED, STEM-13% CR. STEEL, DIMENSIONS / DESIGN PER MFR. STD. / API 602, HW | GL-C804 |
| | 2” | 3” | 600 | RF | BODY/BONNET – ASTM A216 WCB, TRIM STELLITED, STEM-13% CR. STEEL, DIMENSIONS / DESIGN AS PER B16.10 / BS1873, HW | GL-C600 |

| | | | | | | | |
|---|---|---|---|---|---|---|---|
| | | 4” | 12” | 600 | RF | BODY/BONNET – ASTM A216 WCB, TRIM STELLITED, STEM-13% CR. STEEL, DIMENSIONS / DESIGN AS PER B16.10 / BS1873, GEAR OPERATED | GL-C600-G |
| PLUG VALVE | | 1/2” | 1½” | 800 | SW | BODY ASTM A105N, TRIM SS 316, SLEEVE & SEAL RPTFE, BS 5353 / API 599, REGULAR PORT, LO | PL-C804 |
| | | 2” | 2” | 600 | RF | BODY ASTM A216 WCB, TRIM SS 316, SLEEVE & SEAL RPTFE, BS 5353 / API 599, REGULAR PORT, LO | PL-C600 |
| CHECK VALVE | | 1/2” | 1½” | 800 | SW | LIFT TYPE, BODY– A105N, TRIM STELLITED, DIMENSIONS / DESIGN AS PER MFR. STD. / API 602 | CH-C814 |
| | | 2” | 4” | 600 | RF | SWING TYPE, BODY 216 WCB, TRIM STELLITED, DIMENSIONS / DESIGN AS PER B16.10 / BS 1868 | CH-C600 |
| | | 6” | 24” | 600 | RF | DUAL PLATE LUG TYPE, BODY A216 WCB, TRIM STELLITED, TO API 594 | CH-C630 |
| DOUBLE BLOCK & BLEED VALVE | | 2” | 2” | 600 | RF X FNPT | CS BODY, SS 316 TRIM, RPTFE, REDUCED BORE BALL VALVE WITH NEEDLE BLEEDER VALVE, ½” FNPT INST. CONN., API 6D, LO | DB-C608 |
| DOUBLE BLOCK & BLEED AND DOUBLE ISOLATION VALVE | | 4” | 24” | 600 | RF | TWIN SEAL PLUG TYPE, BODY/BONNET - A216 GR. WCB, PLUG - ASTM A216 GR. WCB CASE HARDENED & 75 MICRONS ENP, RPTFE SEAL, API 6D, GEAR OP. | DI-C600-G |
| PIPE | | 1/2” | 3/4” | SCH 160 | PE | ASTM A106 GR. B, SEAMLESS, TO ASME B36.10M | PA01A01A |
| | | 1” | 1½” | SCH 80 | PE | ASTM A106 GR. B, SEAMLESS, TO ASME B36.10M | PA01A01A |
| | | 2” | 14” | SCH 80 | BE | ASTM A106 GR. B, SEAMLESS, TO ASME B36.10M | PA01A01B |
| | | 16” | 24” | SCH 80 | BE | ASTM A672 Gr. B60, CL. 22, EFW, TO ASME B36.10M | PA18B01B |
| NIPPLE | | 1/2” | 3/4” | SCH 160 | PBE | ASTM A106 Gr. B, SEAMLESS, TO ASME B36.10M, 100mm LENGTH | PB01A01L |
| | | 1” | 1½” | SCH 80 | PBE | ASTM A106 Gr. B, SEAMLESS, TO ASME B36.10M, 100mm LENGTH | PB01A01L |
| FITTINGS (NOTE 1) | ELBOW 45 | 1/2” | 1½” | 6000 | SW | ASTM A105N AS PER ASME B16.11 | PC05D03C |
| | | 2” | 14” | AS PER PIPE | BW | ASTM A234 Gr. WPB SEAMLESS, ASME B16.9 | PC06A04D |
| | | 16” | 24” | AS PER PIPE | BW | ASTM A234 Gr. WPB WELDED AS PER ASME B16.9 | PC06B04D |
| | ELBOW 90 | 1/2” | 1½” | 6000 | SW | ASTM A105N AS PER ASME B16.11 | PD05D03C |
| | | 2” | 14” | AS PER PIPE | BW | ASTM A234 Gr. WPB SEAMLESS, ASME B16.9 | PD06A04D |

| | | | | | | | |
|---|---|---|---|---|---|---|---|
| | | 16” | 24” | AS PER PIPE | BW | ASTM A234 Gr. WPB WELDED AS PER ASME B16.9 | PD06B04D |
| | SOCKOLET | 1/2” | 1 1/2” | 6000 | SW | ASTM A105N AS PER MSS SP-97 | PW05D21C |
| | WELDOLET | 2” | 24” | AS PER PIPE | BW | ASTM A105N AS PER MSS SP-97 | PK05X21D |
| | TEE | 1/2” | 1½” | 6000 | SW | ASTM A105N AS PER ASME B16.11 | PI05D03C |
| | | 2” | 14” | AS PER PIPE | BW | ASTM A234 Gr. WPB SEAMLESS, ASME B16.9 | PI06A04D |
| | | 16” | 24” | AS PER PIPE | BW | ASTM A234 Gr. WPB WELDED AS PER ASME B16.9 | PI06B04D |
| | REDUCING TEE | 1/2” | 1½” | 6000 | SW | ASTM A105N AS PER ASME B16.11 | PJ05D03C |
| | | 2” | 14” | AS PER PIPE | BW | ASTM A234 Gr. WPB SEAMLESS, ASME B16.9 | PJ06A04D |
| | | 16” | 24” | AS PER PIPE | BW | ASTM A234 Gr. WPB WELDED AS PER ASME B16.9 | PJ06B04D |
| | CAP | 1/2” | 1½” | 6000 | SW | ASTM A105N AS PER ASME B16.11 | PO05D03C |
| | | 2” | 14” | AS PER PIPE | BW | ASTM A234 Gr. WPB SEAMLESS, ASME B16.9 | PO06A04D |
| | | 16” | 24” | AS PER PIPE | BW | ASTM A234 Gr. WPB WELDED AS PER ASME B16.9 | PO06B04D |
| | COUPLING FULL | 1/2” | 1½” | 6000 | SW | ASTM A105N AS PER ASME B16.11 | PM05D03C |
| | REDUCER CONC. | 3” | 14” | AS PER PIPE | BW | ASTM A234 Gr. WPB SEAMLESS, ASME B16.9 | PE06A04D |
| | | 16” | 24” | AS PER PIPE | BW | ASTM A234 Gr. WPB WELDED AS PER ASME B16.9 | PE06B04D |
| | REDUCER ECC. | 3” | 14” | AS PER PIPE | BW | ASTM A234 Gr. WPB SEAMLESS, ASME B16.9 | PG06A04D |
| | | 16” | 24” | AS PER PIPE | BW | ASTM A234 Gr. WPB WELDED AS PER ASME B16.9 | PG06B04D |
| | SWAGE CONC. | 3/4” | 3” | AS PER PIPE | PBE | ASTM A105N, SEAMLESS AS PER MSS SP-95 | PF06A20N |
| | SWAGE ECC. | 3/4” | 3” | AS PER PIPE | PBE | ASTM A105N, SEAMLESS AS PER MSS SP-95 | PH06A20N |
| FLANGES | | 1/2” | 1½” | 600 | SWRF | ASTM A105N PER ASME B16.5 | PB05C05A |

| | | | | | | |
|---|---|---|---|---|---|---|
| | 2” | 24” | 600 | WNRF | ASTM A105N PER ASME B16.5, SCH TO MATCH PIPE | PC05C05A |
| | 1/2” | 24” | 900 | RTJ | ASTM A105N PER ASME B16.5 | PK05D05C |
| BLIND FLANGES | 1/2” | 24” | 600 | RF | ASTM A105N AS PER ASME B16.5 | PA05C05A |
| SPECTACLE BLIND | 1” | 8” | 600 | RF | ASTM A105N AS PER ASME B16.48 | PG05C06A |
| BLIND & SPACER | 10” | 24” | 600 | RF | ASTM A516 GR. 70 AS PER ASME B16.48 | PH09C06A |
| ORIFICE FLANGE | 2” | 24” | 600 | WNRF | ASTM A105N AS PER ASME B16.36 | PJ05C25A |
| GASKET | 1/2” | 24” | 600 | RF | 4.5 mm THK, SPIRAL WOUND, SS316+GRAPHITE WITH SOFT STEEL CENTERING RING TO ASME B16.20 | PR12G07B |
| | 1/2” | 24” | 900 | RTJ | RTJ TYPE, OCTAGONAL RING JOINT, SOFT IRON TO ASME B16.20 – 90HB MAX. | PV16H07 |
| STUDS / NUTS | STUD BOLTS, ASTM A193 Gr.B7 /194 Gr.2H FULL LENGTH THREAD WITH TWO HEXAGONAL NUTS WITH WASHER AS PER ASME B18.2.1/18.2.2 | | | | | PS14X09A |

NOTE 1: FOR BRANCHING TABLE REFER APPENDIX A.

| CLASS E1X | PIPING MATERIAL SPECIFICATION | | | | | | |
|---|---|---|---|---|---|---|---|
| SERVICE | MS, HSD, SKO, ATF & Naphtha | | | | | CORROSION ALLOWANCE | 1.5mm |
| RATING | ASME 900# | | | | | PIPING MATERIAL | C.S. – GROUP 1.1 |
| SERVICE LIMITS | Pressure (Barg) | 100 | | | | RADIOGRAPHY | 100% |
| | Temp. ($^0$C) | 65 | | | | STRESS RELIEF | PER B31.3 REQUIREMENTS |

| ITEMS | NPS SIZES FROM | NPS SIZES TO | RATING / SCH | ENDS | MATERIAL | COMMODITY CODES |
|---|---|---|---|---|---|---|
| BALL VALVE | 1/2” | 1½” | 900 | RTJ | BODY/BONNET– ASTM A105N, TRIM - SS 316, SEAT & SEAL RPTFE, DIMENSIONS / DESIGN AS PER B16.10 / BS EN ISO 17292, API 6D. FLOATING BALL, REDUCED/FULL, LO | BA-C901-R/ BA-C901-F |
| | 2” | 2” | 900 | RTJ | BODY/BONNET – ASTM A216 WCB, TRIM - SS 316, SEAT & SEAL RPTFE, DIMENSIONS / DESIGN - B16.10 / BS EN ISO 17292, API 6D. TRUNNION BALL, REDUCED / FULL BORE, LO | BA-C911-R/ BA-C911-F |
| | 3” | 20” | 900 | RTJ | BODY/BONNET – ASTM A216 WCB, TRIM - SS 316, SEAT & SEAL RPTFE, DIMENSIONS / DESIGN AS PER B16.10 / BS EN ISO 17292, API 6D. TRUNNION BALL, REDUCED / FULL BORE, GEAR OPERATED | BA-C911-RG /BA-C911-FG |
| GATE VALVE | 1/2” | 1½” | 1500 | BW | BODY/BONNET – ASTM A105N, TRIM STELLITED, STEM-13% CR. STEEL, DIMENSIONS / DESIGN AS PER B16.10 / API 602, HW | GA-C1502 |
| | 2” | 3” | 900 | RTJ | BODY/BONNET – ASTM A216 WCB, TRIM STELLITED, STEM-13% CR. STEEL, DIMENSIONS / DESIGN AS PER B16.10/ API 600, HW | GA-C911 |
| | 4” | 20” | 900 | RTJ | BODY/BONNET – ASTM A216 WCB, TRIM STELLITED, STEM-13% CR. STEEL, DIMENSIONS / DESIGN AS PER B16.10/ API 600, GEAR OP. | GA-C911-G |
| GLOBE VALVE | 1/2” | 1½” | 1500 | BW | BODY/BONNET – ASTM A105N, TRIM STELLITED, STEM-13% CR. STEEL, DIMENSIONS / DESIGN AS PER B16.10/ API 602, HW | GL-C1502 |
| | 2” | 2” | 900 | RTJ | BODY/BONNET – ASTM A216 WCB, TRIM STELLITED, STEM-13% CR. STEEL, DIMENSIONS / DESIGN AS PER B16.10/ BS 1873, HW | GL-C901 |

| | | | | | | |
|---|---|---|---|---|---|---|
| | 3” | 12” | 900 | RTJ | BODY/BONNET – ASTM A216 WCB, TRIM STELLITED, STEM-13% CR. STEEL, DIMENSIONS / DESIGN AS PER B16.10/ BS 1873, GEAR OP. | GL-C901-G |
| PLUG VALVE | 1/2” | 1½” | 900 | RTJ | BODY/BONNET - ASTM A105N, TRIM SS 316, SLEEVE & SEAL RPTFE, BS 5353 / API 599, REGULAR PORT, LO | PL-C901 |
| | 2” | 2” | 900 | RTJ | BODY/BONNET - ASTM A216 WCB, TRIM SS 316, SLEEVE & SEAL RPTFE, TO BS 5353 / API 599, REGULAR PORT, LO | PL-C901 |
| CHECK VALVE | 1/2” | 1½” | 1500 | BW | LIFT TYPE, BODY / COVER – ASTM A105N, TRIM STELLITED, DIMENSIONS / DESIGN AS PER B16.10 / API 602 | CH-C1512 |
| | 2” | 4” | 900 | RTJ | SWING TYPE, BODY / COVER A216 WCB, TRIM STELLITED, DIMENSIONS / DESIGN AS PER B16.10 / BS 1868 | CH-C901 |
| | 6” | 20” | 900 | RTJ | DUAL PLATE LUG TYPE, BODY / COVER - A216 WCB, TRIM STELLITED, TO API 594 | CH-C931 |
| DOUBLE BLOCK & BLEED VALVE | 2” | 2” | 900 | RTJ X FNPT | CS BODY, SS 316 TRIM, RPTFE, REDUCED BORE BALL VALVE WITH NEEDLE BLEEDER VALVE, ½” FNPT INST. CONN., API 6D, LO | DB-C909 |
| DOUBLE BLOCK & BLEED AND DOUBLE ISOLATION VALVE | 3” | 20” | 900 | RTJ | TWIN SEAL PLUG TYPE, BODY/BONNET - A216 GR. WCB, PLUG - ASTM A216 GR. WCB CASE HARDENED & 75 MICRONS ENP, RPTFE SEAL, API 6D, GEAR OPERATED | DI-C901-G |
| PIPE | 1/2” | 1½” | SCH 160 | BE | ASTM A106 GR. B, SEAMLESS, TO ASME B36.10M | PA01A01B |
| | 2” | 3” | SCH 160 | BE | ASTM A106 GR. B, SEAMLESS, TO ASME B36.10M | PA01A01B |
| | 4” | 6” | SCH 120 | BE | ASTM A106 GR. B, SEAMLESS, TO ASME B36.10M | PA01A01B |
| | 8” | 14” | SCH 100 | BE | ASTM A106 GR. B, SEAMLESS, TO ASME B36.10M | PA01A01B |
| | 16” | 20” | SCH 100 | BE | ASTM A672 Gr. B60, CL. 22, EFW, TO ASME B36.10M | PA18B01B |
| NIPPLE | 1/2” | 1½” | SCH. 160 | PBE | ASTM A106 Gr. B, SEAMLESS, ASME B36.10M, 100mm LENGTH | PB01A01L |
| FITTINGS ELBOW | 1/2” | 1½” | AS PER PIPE | BW | ASTM A105N AS PER ASME B16.9 | PC05A04D |

| | | | | | | | |
|---|---|---|---|---|---|---|---|
| (NOTE 1) | 45 | 2” | 14” | AS PER PIPE | BW | ASTM A234 Gr. WPB SEAMLESS, ASME B16.9 | PC06A04D |
| | | 16” | 20” | AS PER PIPE | BW | ASTM A234 Gr. WPB WELDED, ASME B16.9 | PC06B04D |
| | ELBOW 90 | 1/2” | 1½” | AS PER PIPE | BW | ASTM A105N AS PER ASME B16.9 | PD05A04D |
| | | 2” | 14” | AS PER PIPE | BW | ASTM A234 Gr. WPB SEAMLESS, ASME B16.9 | PD06A04D |
| | | 16” | 20” | AS PER PIPE | BW | ASTM A234 Gr. WPB WELDED, ASME B16.9 | PD06B04D |
| | WELDOLET | 2” | 24” | AS PER PIPE | BW | ASTM A 105N AS PER MSS SP-97 | PK05X21D |
| | TEE | 1/2” | 1½” | AS PER PIPE | BW | ASTM A105N AS PER ASME B16.9 | PI05A04D |
| | | 2” | 14” | AS PER PIPE | BW | ASTM A234 Gr. WPB SEAMLESS, ASME B16.9 | PI06A04D |
| | | 16” | 20” | AS PER PIPE | BW | ASTM A234 Gr. WPB WELDED, ASME B16.9 | PI06B04D |
| | REDUCING TEE | 1/2” | 1½” | AS PER PIPE | BW | ASTM A105N AS PER ASME B16.9 | PJ05A04D |
| | | 2” | 14” | AS PER PIPE | BW | ASTM A234 Gr. WPB SEAMLESS, ASME B16.9 | PJ06A04D |
| | | 16” | 20” | AS PER PIPE | BW | ASTM A234 Gr. WPB WELDED, ASME B16.9 | PJ06B04D |
| | CAP | 1/2” | 1½” | AS PER PIPE | BW | ASTM A105N AS PER ASME B16.9 | PO05A04D |
| | | 2” | 14” | AS PER PIPE | BW | ASTM A234 Gr. WPB SEAMLESS, ASME B16.9 | PO06A04D |
| | | 16” | 20” | AS PER PIPE | BW | ASTM A234 Gr. WPB WELDED, ASME B16.9 | PO06B04D |
| | REDUCER CONC. | 3” | 14” | AS PER PIPE | BW | ASTM A234 Gr. WPB, SEAMLESS, ASME B16.9 | PE06A04D |
| | | 16” | 20” | AS PER PIPE | BW | ASTM A234 Gr. WPB WELDED, ASME B16.9 | PE06B04D |
| | REDUCER ECC. | 3” | 14” | AS PER PIPE | BW | ASTM A234 Gr. WPB, SEAMLESS, ASME B16.9 | PG06A04D |

| | | | | | | | |
|---|---|---|---|---|---|---|---|
| | | 16” | 20” | AS PER PIPE | BW | ASTM A234 Gr. WPB WELDED, ASME B16.9 | PG06B04D |
| | SWAGE CONC. | 3/4” | 3” | PER PIPE | BBE | ASTM A105N, SEAMLESS AS PER MSS SP-95 | PF06A20Q |
| | SWAGE ECC. | 3/4” | 3” | PER PIPE | BBE | ASTM A105N, SEAMLESS AS PER MSS SP-95 | PH06A20Q |
| FLANGES | | 1/2” | 20” | 900 | WN-RTJ | ASTM A105N PER ASME B16.5, SCH TO MATCH PIPE | PC05D05C |
| BLIND FLANGES | | 1/2” | 20” | 900 | RTJ | ASTM A105N AS PER ASME B16.5 | PA05D05C |
| SPECTACLE BLIND | | 3” | 6” | 900 | RTJ | ASTM A105N AS PER ASME B16.48 | PG05D06C |
| BLIND & SPACER | | 8” | 20” | 900 | RTJ | ASTM A516 Gr. 70 AS PER ASME B16.48 | PH09D06C |
| ORIFICE FLANGE | | 2” | 20” | 900 | RTJ | ASTM A105N AS PER ASME B16.36 | PJ05D25C |
| GASKET | | 1/2” | 20” | 900 | - | RTJ TYPE, OCTAGONAL RING JOINT, SOFT IRON TO ASME B16.20 - 90 HB MAX. | PV16H07 |
| STUDS / NUTS | | STUD BOLTS, ASTM A193 Gr.B7 /194 Gr.2H FULL LENGTH THREAD WITH TWO HEXAGONAL NUTS AS PER ASME B18.2.1/18.2.2 | | | | | PS14X09A |

NOTE 1: FOR BRANCHING TABLE REFER APPENDIX A.

# 9 BOLT LENGTH TABLES

## Class 150:

| NPS | No. of Bolts | Bolt Size (Inch) | Bolt Length (mm) * | | |
|---|---|---|---|---|---|
| | | | Flanged Joints | Lug Type Dual Check Valves | Spectacle Blinds, Spades and Spacers |
| 1/2 | 4 | 1/2 | 60 | - | 70 |
| 3/4 | 4 | 1/2 | 70 | - | 70 |
| 1 | 4 | 1/2 | 70 | - | 80 |
| 1.1/2 | 4 | 1/2 | 80 | - | 80 |
| 2 | 4 | 5/8 | 90 | - | 90 |
| 3 | 4 | 5/8 | 100 | - | 100 |
| 4 | 8 | 5/8 | 100 | - | 110 |
| 6 | 8 | 3/4 | 110 | 210 | 120 |
| 8 | 8 | 3/4 | 110 | 240 | 130 |
| 10 | 12 | 7/8 | 120 | 270 | 140 |
| 12 | 12 | 7/8 | 120 | 310 | 150 |
| 14 | 12 | 1 | 140 | 330 | 160 |
| 16 | 16 | 1 | 140 | 340 | 170 |
| 18 | 16 | 1 1/8 | 150 | 370 | 180 |
| 20 | 20 | 1 1/8 | 160 | 390 | 200 |
| 24 | 20 | 1 1/4 | 210 | 440 | 250 |

## Class 300:

| NPS | No. of Bolts | Bolt Size (Inch) | Bolt Length (mm) * | |
|---|---|---|---|---|
| | | | Flanged Joints | Orifice Flanges |
| 1/2 | 4 | 1/2 | 70 | - |
| 3/4 | 4 | 5/8 | 80 | - |
| 1 | 4 | 5/8 | 80 | - |
| 1.1/2 | 4 | 3/4 | 100 | - |
| 2 | 8 | 5/8 | 90 | 100 |
| 3 | 8 | 3/4 | 110 | 120 |
| 4 | 8 | 3/4 | 120 | 130 |
| 6 | 12 | 3/4 | 130 | 140 |
| 8 | 12 | 7/8 | 140 | 160 |
| 10 | 16 | 1 | 160 | 180 |
| 12 | 16 | 1 1/8 | 180 | 190 |
| 14 | 20 | 1 1/8 | 180 | 200 |
| 16 | 20 | 1 1/4 | 230 | 250 |
| 18 | 24 | 1 1/4 | 230 | 260 |
| 20 | 24 | 1 1/4 | 240 | 270 |
| 24 | 24 | 1 1/2 | 270 | 310 |

## Class 600:

| NPS | No. of Bolts | Bolt Size (Inch) | Bolt Length (mm) * | | | |
|---|---|---|---|---|---|---|
| | | | Flanged Joints | Lug Type Dual Check Valves | Spectacle Blinds, Spades and Spacers | Orifice Flanges |
| 1/2 | 4 | 1/2 | 80 | - | - | - |
| 3/4 | 4 | 5/8 | 90 | - | - | - |
| 1 | 4 | 5/8 | 100 | - | 110 | - |
| 1.1/2 | 4 | 3/4 | 110 | - | 130 | - |
| 2 | 8 | 5/8 | 110 | - | 130 | 140 |
| 3 | 8 | 3/4 | 130 | - | 150 | 140 |
| 4 | 8 | 7/8 | 150 | - | 170 | 150 |
| 6 | 12 | 1 | 180 | 320 | 200 | 180 |
| 8 | 12 | 1 1/8 | 200 | 370 | 230 | 200 |
| 10 | 16 | 1 1/4 | 250 | 470 | 290 | 260 |
| 12 | 20 | 1 1/4 | 260 | 490 | 310 | 260 |
| 14 | 20 | 1 3/8 | 270 | 550 | 320 | 280 |
| 16 | 20 | 1 1/2 | 300 | 600 | 360 | 310 |
| 18 | 20 | 1 5/8 | 320 | 680 | 380 | 330 |
| 20 | 24 | 1 5/8 | 340 | 700 | 410 | 350 |
| 24 | 24 | 1 7/8 | 380 | 770 | 460 | 390 |

## Class 900:

| NPS | No. of Bolts | Bolt Size (Inch) | Bolt Length (mm) * | | | |
|---|---|---|---|---|---|---|
| | | | Flanged Joints | Lug Type Dual Check Valves | Spectacle Blinds, Spades and Spacers | Orifice Flanges |
| 1/2 | 4 | 3/4 | 110 | - | - | - |
| 3/4 | 4 | 3/4 | 120 | - | - | - |
| 1 | 4 | 7/8 | 130 | - | - | - |
| 1.1/2 | 4 | 1 | 140 | - | - | - |
| 2 | 8 | 7/8 | 150 | - | - | 150 |
| 3 | 8 | 7/8 | 150 | - | 190 | 150 |
| 4 | 8 | 1 1/8 | 180 | - | 220 | 180 |
| 6 | 12 | 1 1/8 | 200 | 360 | 250 | 200 |
| 8 | 12 | 1 3/8 | 260 | 470 | 320 | 270 |
| 10 | 16 | 1 3/8 | 280 | 520 | 350 | 280 |
| 12 | 20 | 1 3/8 | 290 | 590 | 370 | 300 |
| 14 | 20 | 1 1/2 | 320 | 680 | 410 | 320 |
| 16 | 20 | 1 5/8 | 340 | 720 | 430 | 350 |
| 18 | 20 | 1 7/8 | 380 | 830 | 490 | 390 |
| 20 | 20 | 2 | 410 | 860 | 530 | 420 |
| 24 | 20 | 2 1/2 | 510 | 1000 | 650 | 520 |

## 10 DRAIN & VENT CONNECTIONS FOR PIPING 11/2" & BELOW

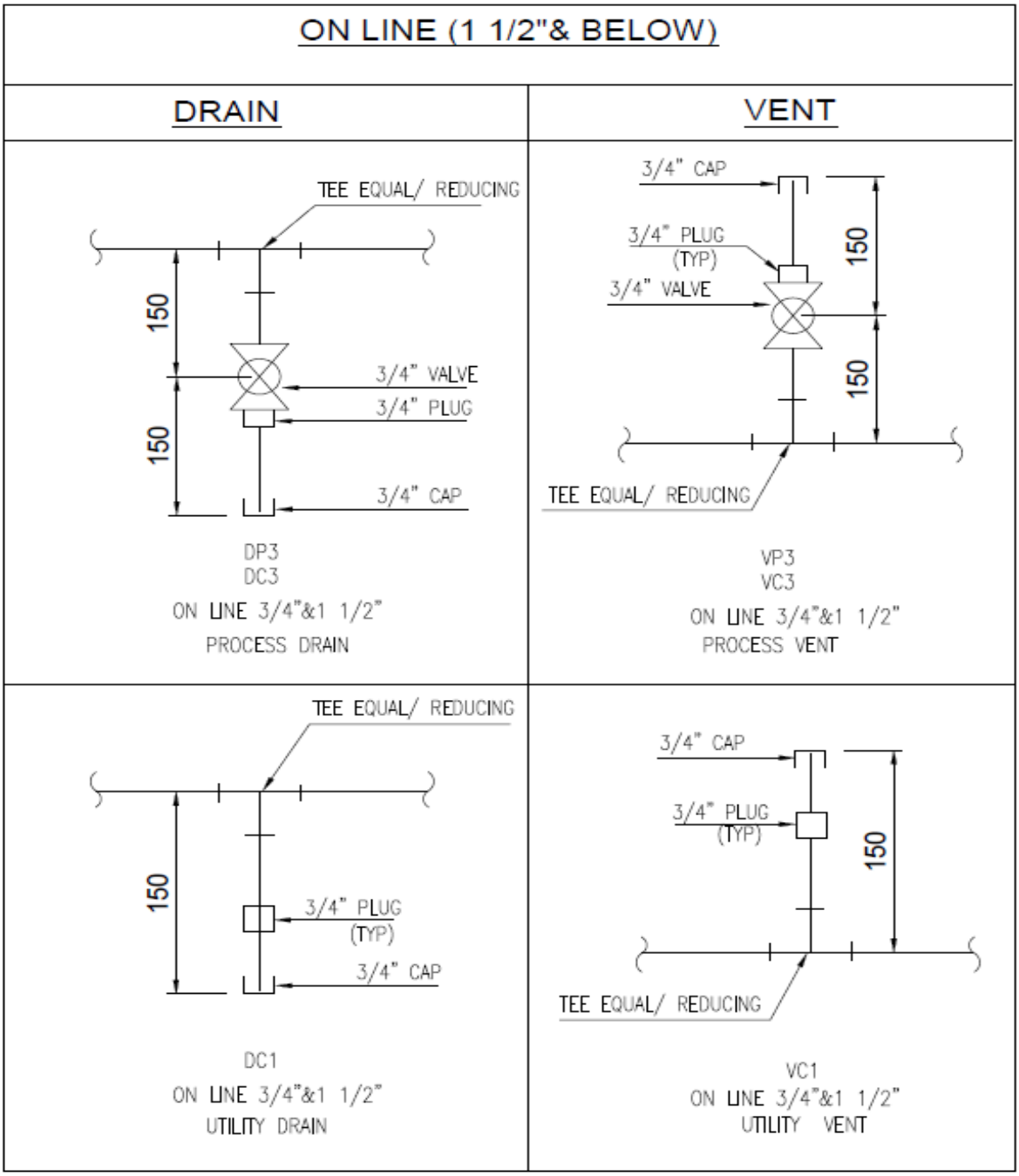

## 11 DRAIN & VENT CONNECTIONS FOR PIPING 2" & ABOVE

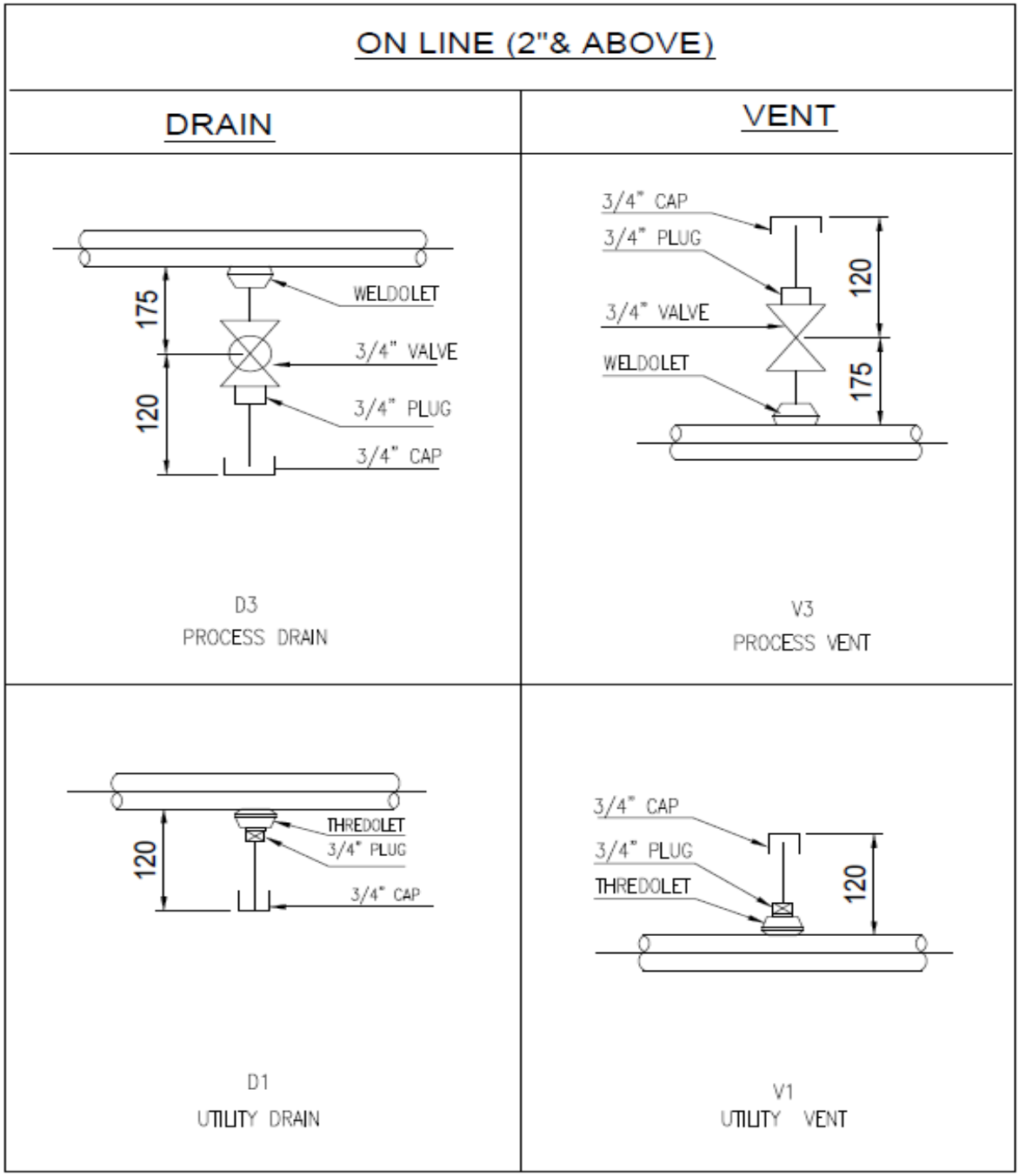

## 12 SPECTACLE BLINDS, SPADES & SPACERS (NPS 0.5 - NPS 24)

### CL150:

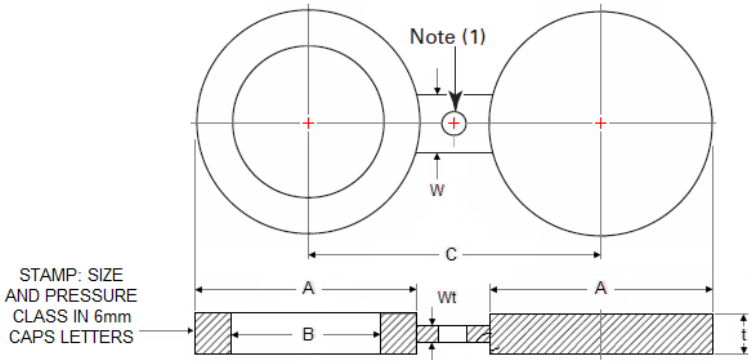


| Nominal Pipe Size Range | | | | | | | | | | | |
|---|---|---|---|---|---|---|---|---|---|---|---|
| DIM | ½ | ¾ | 1 | 1½ | 2 | 3 | 4 | 6 | 8 | 10 | 12 |
| A (mm) | 45 | 54 | 64 | 83 | 102 | 133 | 172 | 219 | 276 | 337 | 406 |
| B (mm) | 16 | 21 | 27 | 48 | 61 | 89 | 114 | 168 | 219 | 273 | 324 |
| C (mm) | 60 | 70 | 80 | 100 | 120 | 150 | 190 | 240 | 300 | 360 | 430 |
| t (mm) | 3 | 3 | 3 | 6.4 | 6.4 | 6.5 | 9.7 | 12.7 | 12.8 | 15.7 | 19.1 |
| W (mm) | 38 | 38 | 38 | 38 | 51 | 64 | 64 | 76 | 76 | 102 | 102 |
| Wt (mm) | 3 | 3 | 3 | 6 | 6 | 6 | 6 | 6 | 6 | 8 | 8 |
| Weight (Kg) | 0.13 | 0.2 | 0.27 | 0.45 | 0.68 | 1.14 | 1.82 | 4.15 | 8.5 | 15.41 | 32.32 |

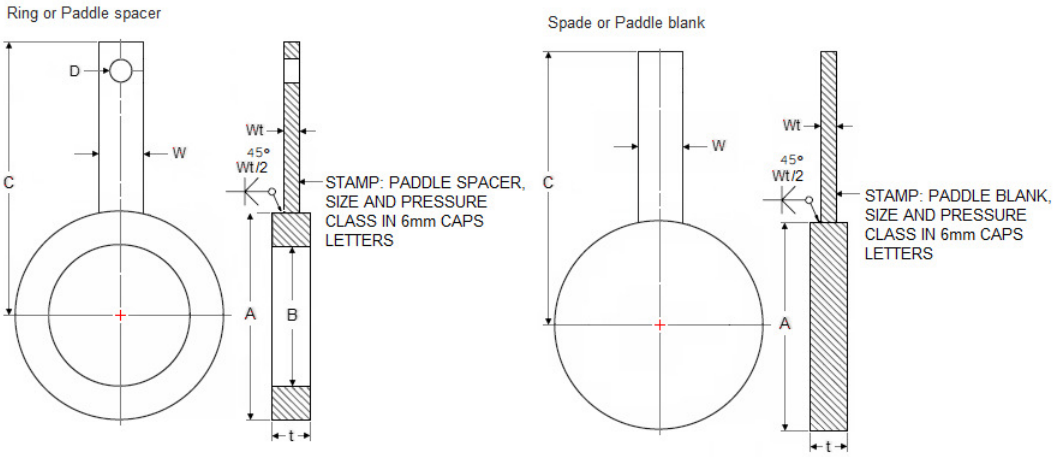

| Nominal Pipe Size Range | | | | | |
|---|---|---|---|---|---|
| DIM | 14 | 16 | 18 | 20 | 24 |
| A (mm) | 448 | 511 | 546 | 603 | 714 |
| B (mm) | 356 | 406 | 457 | 508 | 610 |
| C (mm) | 378 | 410 | 427 | 455 | 512 |
| t (mm) | 19.5 | 22.4 | 25.4 | 28.4 | 31.9 |
| W (mm) | 44 | 44 | 51 | 51 | 51 |
| Wt (mm) | 10 | 10 | 10 | 14 | 16 |
| Weight (Kg) | 43.22 | 56.27 | 61.12 | 83.34 | 140.66 |

## CL600:

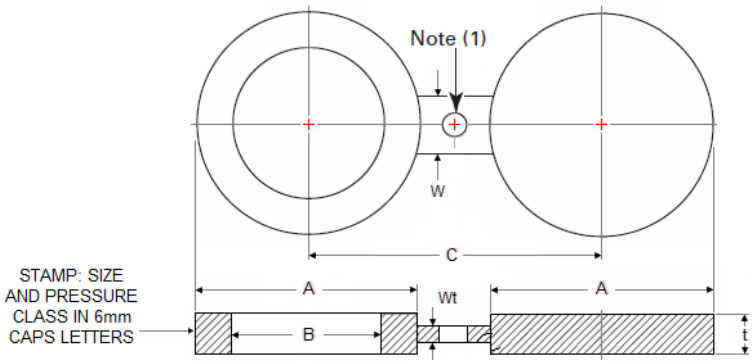


| Nominal Pipe Size Range | | | | | | | | | |
|---|---|---|---|---|---|---|---|---|---|
| DIM | ½ | ¾ | 1 | 1½ | 2 | 3 | 4 | 6 | 8 |
| A (mm) | 51 | 64 | 70 | 92 | 108 | 146 | 191 | 264 | 318 |
| B (mm) | 16 | 21 | 27 | 43 | 55 | 83 | 108 | 162 | 212 |
| C (mm) | 65 | 80 | 90 | 115 | 125 | 170 | 215 | 290 | 350 |
| t (mm) | 6.4 | 6.4 | 6.4 | 9.7 | 9.7 | 12.7 | 15.7 | 22.4 | 28.4 |
| W (mm) | 38 | 38 | 57 | 67 | 57 | 67 | 76 | 86 | 95 |
| Wt (mm) | 6 | 6 | 6 | 6 | 6 | 8 | 8 | 8 | 10 |
| Weight (Kg) | 0.19 | 0.28 | 0.52 | 0.89 | 1.19 | 3.55 | 5.96 | 17.81 | 31.15 |

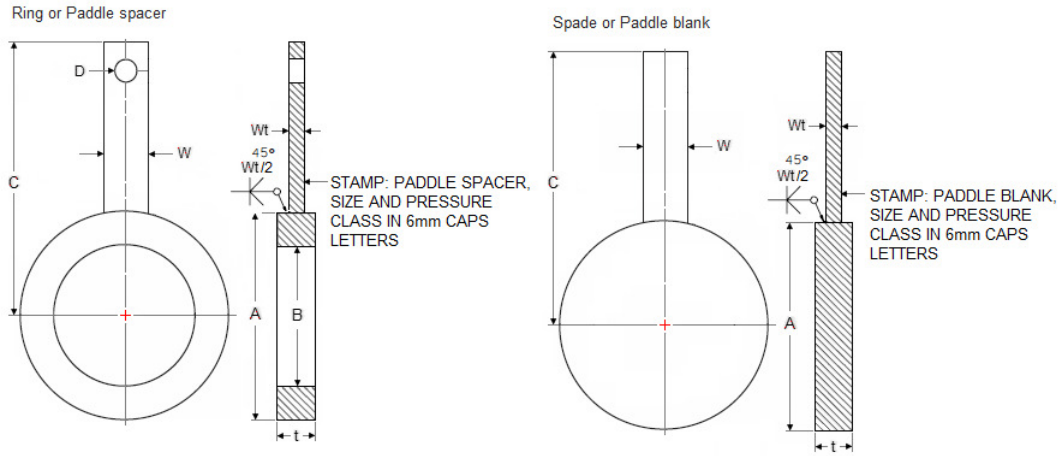


| Nominal Pipe Size Range | | | | | | | | |
|---|---|---|---|---|---|---|---|---|
| DIM | 10 | 12 | 14 | 16 | 18 | 20 | 24 | |
| A (mm) | 397 | 454 | 489 | 562 | 610 | 679 | 787 | |
| B (mm) | 265 | 315 | 346 | 397 | 448 | 497 | 597 | |
| C (mm) | 352 | 381 | 398 | 435 | 459 | 493 | 547 | |
| t (mm) | 35.1 | 41.1 | 44.5 | 50.8 | 53.8 | 63.5 | 73.2 | |
| W (mm) | 44 | 44 | 44 | 44 | 51 | 51 | 51 | |
| Wt (mm) | 10 | 15 | 15 | 20 | 20 | 25 | 25 | |
| Weight (Kg) | 55.77 | 87.44 | 114.17 | 169.53 | 212.17 | 293.47 | 447.57 | |

## CL900:

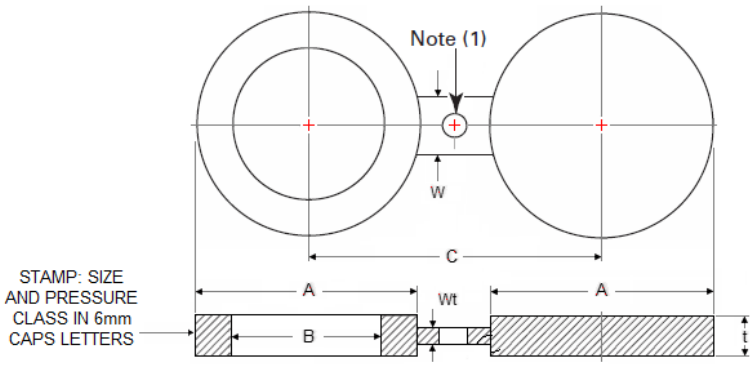

| Nominal Pipe Size Range | | | |
|---|---|---|---|
| DIM | 3 | 4 | 6 |
| A (mm) | 165 | 203 | 286 |
| B (mm) | 83 | 108 | 162 |
| C (mm) | 190 | 235 | 320 |
| t (mm) | 15.7 | 19.1 | 25.4 |
| W (mm) | 67 | 76 | 86 |
| Wt (mm) | 6 | 6 | 8 |
| Weight (Kg) | 9 | 14 | 28 |

Ring or Paddle spacer

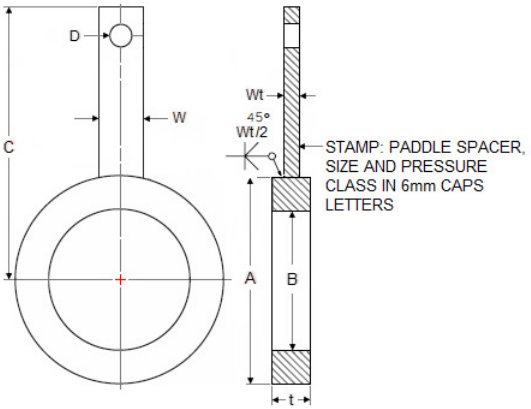


Spade or Paddle blank

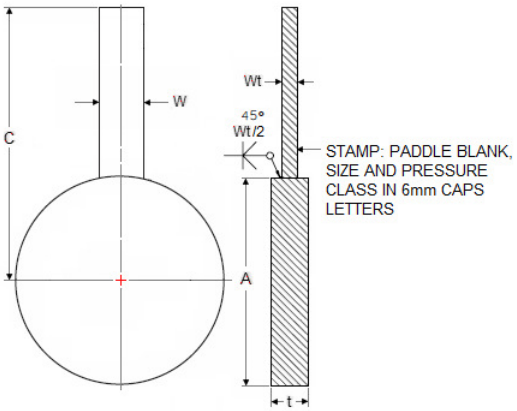


| Nominal Pipe Size Range | | | | | | | | |
|---|---|---|---|---|---|---|---|---|
| DIM | 8 | 10 | 12 | 14 | 16 | 18 | 20 | |
| A (mm) | 356 | 432 | 495 | 518 | 572 | 635 | 696 | |
| B (mm) | 212 | 265 | 315 | 346 | 397 | 448 | 497 | |
| C (mm) | 321 | 372 | 405 | 423 | 460 | 494 | 528 | |
| t (mm) | 35.1 | 41.1 | 47.8 | 53.8 | 60.5 | 66.5 | 73.2 | |
| W (mm) | 95 | 105 | 105 | 114 | 124 | 133 | 133 | |
| Wt (mm) | 12 | 12 | 15 | 20 | 20 | 25 | 25 | |
| Weight (Kg) | 52 | 88 | 135 | 186 | 248 | 354 | 447 | |

# APPENDIX A

# BRANCH CONNECTIONS

WorleyParsons
resources & energy

**BRANCH CONNECTION TABLE FOR A1X, A1U & A1Y**

| | BRANCH | | | | | | | | | | | | | | | | | | | | |
|---|---|---|---|---|---|---|---|---|---|---|---|---|---|---|---|---|---|---|---|---|---|
| | inches | 3/4 | 1 | 1 1/2 | 2 | 3 | 4 | 6 | 8 | 10 | 12 | 14 | 16 | 18 | 20 | 24 | | | | | |
| | 3/4 | SWT | | | | | | | | | | | | | | | | | | | |
| H | 1 | SWT | SWT | | | | | | | | | | | | | | | | | | |
| E | 1 1/2 | SWT | SWT | SWT | | | | | | | | | | | | | | | | | |
| A | 2 | SW | SW | SW | BWT | | | | | | | | | | | | | | | | |
| D | 3 | SW | SW | SW | BWT | BWT | | | | | | | | | | | | | | | |
| E | 4 | SW | SW | SW | BWT | BWT | BWT | | | | | | | | | | | | | | |
| R | 6 | SW | SW | SW | W | BWT | BWT | BWT | | | | | | | | | | | | | |
| | 8 | SW | SW | SW | W | W | BWT | BWT | BWT | | | | | | | | | | | | |
| | 10 | SW | SW | SW | W | W | W | BWT | BWT | BWT | | | | | | | | | | | |
| | 12 | SW | SW | SW | W | W | W | W | BWT | BWT | BWT | | | | | | | | | | |
| | 14 | SW | SW | SW | W | W | W | W | W | BWT | BWT | BWT | | | | | | | | | |
| | 16 | SW | SW | SW | W | W | W | W | W | W | BWT | BWT | BWT | | | | | | | | |
| | 18 | SW | SW | SW | W | W | W | W | W | W | W | BWT | BWT | BWT | | | | | | | |
| | 20 | SW | SW | SW | W | W | W | W | W | W | W | W | BWT | BWT | BWT | | | | | | |
| | 24 | SW | SW | SW | W | W | W | W | W | W | W | W | W | BWT | BWT | BWT | | | | | |

Notes:

BWT - Butt Weld Tee Equal and Reducing

SWT - Socket Weld Tee Equal and Reducing

W - Weldolet

SW - Sockolet

## BRANCH CONNECTION TABLE FOR D1X

| | | BRANCH | | | | | | | | | | | | | | | | | | | |
|---|---|---|---|---|---|---|---|---|---|---|---|---|---|---|---|---|---|---|---|---|---|
| | inches | 3/4 | 1 | 1 1/2 | 2 | 3 | 4 | 6 | 8 | 10 | 12 | 14 | 16 | 18 | 20 | 24 | | | | | |
| | 3/4 | SWT | | | | | | | | | | | | | | | | | | | |
| H | 1 | SWT | SWT | | | | | | | | | | | | | | | | | | |
| E | 1 1/2 | SWT | SWT | SWT | | | | | | | | | | | | | | | | | |
| A | 2 | SW | SW | SW | BWT | | | | | | | | | | | | | | | | |
| D | 3 | SW | SW | SW | BWT | BWT | | | | | | | | | | | | | | | |
| E | 4 | SW | SW | SW | BWT | BWT | BWT | | | | | | | | | | | | | | |
| R | 6 | SW | SW | SW | W | BWT | BWT | BWT | | | | | | | | | | | | | |
| | 8 | SW | SW | SW | W | W | BWT | BWT | BWT | | | | | | | | | | | | |
| | 10 | SW | SW | SW | W | W | BWT | BWT | BWT | BWT | | | | | | | | | | | |
| | 12 | SW | SW | SW | W | W | W | BWT | BWT | BWT | BWT | | | | | | | | | | |
| | 14 | SW | SW | SW | W | W | W | BWT | BWT | BWT | BWT | BWT | | | | | | | | | |
| | 16 | SW | SW | SW | W | W | W | BWT | BWT | BWT | BWT | BWT | BWT | | | | | | | | |
| | 18 | SW | SW | SW | W | W | W | W | BWT | BWT | BWT | BWT | BWT | BWT | | | | | | | |
| | 20 | SW | SW | SW | W | W | W | W | BWT | BWT | BWT | BWT | BWT | BWT | BWT | | | | | | |
| | 24 | SW | SW | SW | W | W | W | W | W | BWT | BWT | BWT | BWT | BWT | BWT | BWT | | | | | |

Notes:

BWT - Butt Weld Tee Equal and Reducing

SWT - Socket Weld Tee Equal and Reducing

W - Weldolet

SW - Sockolet

## BRANCH CONNECTION TABLE FOR E1X

| | | BRANCH | | | | | | | | | | | | | | | | | | | |
|---|---|---|---|---|---|---|---|---|---|---|---|---|---|---|---|---|---|---|---|---|---|
| | inches | 3/4 | 1 | 1 1/2 | 2 | 3 | 4 | 6 | 8 | 10 | 12 | 14 | 16 | 18 | 20 | | | | | | |
| | 3/4 | BWT | | | | | | | | | | | | | | | | | | | |
| H | 1 | BWT | BWT | | | | | | | | | | | | | | | | | | |
| E | 1 1/2 | BWT | BWT | BWT | | | | | | | | | | | | | | | | | |
| A | 2 | W | W | W | BWT | | | | | | | | | | | | | | | | |
| D | 3 | W | W | W | BWT | BWT | | | | | | | | | | | | | | | |
| E | 4 | W | W | W | BWT | BWT | BWT | | | | | | | | | | | | | | |
| R | 6 | W | W | W | W | BWT | BWT | BWT | | | | | | | | | | | | | |
| | 8 | W | W | W | W | B | BWT | BWT | BWT | | | | | | | | | | | | |
| | 10 | W | W | W | W | W | BWT | BWT | BWT | BWT | | | | | | | | | | | |
| | 12 | W | W | W | W | W | W | BWT | BWT | BWT | BWT | | | | | | | | | | |
| | 14 | W | W | W | W | W | W | BWT | BWT | BWT | BWT | BWT | | | | | | | | | |
| | 16 | W | W | W | W | W | W | BWT | BWT | BWT | BWT | BWT | BWT | | | | | | | | |
| | 18 | W | W | W | W | W | W | W | BWT | BWT | BWT | BWT | BWT | BWT | | | | | | | |
| | 20 | W | W | W | W | W | W | W | BWT | BWT | BWT | BWT | BWT | BWT | BWT | | | | | | |

Notes:

BWT - Butt Weld Tee Equal and Reducing

SWT - Socket Weld Tee Equal and Reducing

W - Weldolet

SW - Sockolet

WorleyParsons
resources & energy

# VVSPL CAPACITY AUGMENTATION PROJECT

# Specification for External Painting and Protective Coating

Project No: 403102-14495

Document No: 14495-00-PE-SPC-0005

17 Feb 2017

I-Think Lodha Techno Campus,
5th Floor, Tower B,
Pokhran Road No. 2
Thane (West) – 400607
Tel: +91 2266515700
Fax: +91 2267818000

© Copyright 2017 WorleyParsons

WorleyParsons

resources & energy

SPECIFICATION FOR EXTERNAL PAINTING AND PROTECTIVE COATING

# SYNOPSIS

This document presents the Specification for External Painting and Protective Coating for the VVSPL Capacity Augmentation Project.

**Disclaimer**

This report has been prepared on behalf of and for the exclusive use of HPCL, and is subject to and issued in accordance with the agreement between HPCL and WorleyParsons India Pvt Ltd.

WorleyParsons India Pvt Ltd accepts no liability or responsibility whatsoever for it in respect of any use of or reliance upon this document by any third party.

Copying this report without the permission of HPCL or WorleyParsons is not permitted.

**VVSPL CAPACITY AUGMENTATION PROJECT**

| REV | DESCRIPTION | ORIG | REVIEW | WORLEY-PARSONS APPROVAL | DATE | CUSTOMER APPROVAL | DATE |
|---|---|---|---|---|---|---|---|
| B | Issued for Information | MAYM | PISK | KAVK | | | |
| | | | | | | | |
| | | | | | | | |

# CONTENTS

1 INTRODUCTION ..... 5
1.1 General ..... 5
1.2 Scope ..... 5
2 CODES, REGULATIONS AND STANDARDS ..... 5
3 GENERAL ..... 7
3.1 Workmanship ..... 7
3.2 Marking Conditions ..... 7
4 MATERIALS ..... 7
4.1 Storage of Materials ..... 7
4.2 Manufacturer's Recommendations ..... 7
4.3 Material & Painting for Instrument Items ..... 7
5 EXTENT OF PAINTING ..... 8
5.1 Surfaces to be painted ..... 8
5.2 Surfaces NOT to be painted ..... 9
6 EXPOSURE CONDITIONS ..... 9
7 AMBIENT LIMITATIONS ..... 10
7.1 Surface Preparation and Material Application ..... 10
7.2 Ventilation ..... 11
8 SURFACE PREPARATION ..... 11
8.1 Abrasive Blast Cleaning ..... 11
9 PRIMING AND FINISHING ..... 13
9.1 Manufacturer's Recommendations ..... 13
9.2 Application Procedures ..... 13
9.3 Types of Primer ..... 15
9.4 Types of Intermediate/Finish Paint ..... 16
9.5 Paint System ..... 16

**10 INSPECTION** ..... 17

**11 GUARANTEE** ..... 19

**12 COATING & WRAPPING** ..... 20

**12.1 Scope** ..... 20

**12.2 Procedure** ..... 20

**12.3 Coating & Wrapping Materials** ..... 21

**12.4 Inspection** ..... 21

**12.5 Repairs** ..... 21

**12.6 Handling of Coated Pipes** ..... 21

**12.7 Safety Precautions** ..... 21

**12.8 Guarantee** ..... 22

**12.9 Reference** ..... 22

APPENDICES

Appendix – 1.0

Appendix – 2.0

# 1 INTRODUCTION

## 1.1 General

Hindustan Petroleum Corporation Limited (hereinafter referred to as "HPCL") has appointed WorleyParsons India Pvt. Ltd. as EPMC for the project.

HPCL is currently pursuing to expand Vizag refinery from the current name plate capacity of 8.3 MMTPA to 15 MMTPA with a yield of 11.85 MMTPA for MS, HSD & SKO. In-line with refinery expansion plan, HPCL is also planning to take up capacity augmentation of existing VVSPL (Vizag Vijayawada Secunderabad Pipeline) from 5.38 MMTPA to 7.9 MMTPA simultaneously.

Capacity augmentation is proposed by implementation of new pump stations at existing IPS-1 (Ch. 92.9 km), IPS-2 (Ch. 264.5 km), SV-17 Station and also by upgrading the existing booster pump facilities in Vizag, Rajahmundry, Vijayawada, Suryapet and in Secunderabad. It also covers formulating and integration of new facilities with existing Electrical, Instrumentation, PLC, SCADA, APPS including LDS, OWS system, piping arrangements.

## 1.2 Scope

This specification defines the requirements for surface preparation, selection and application of primers and paints on external surfaces of equipment, vessels, machinery, piping, ducts, steel structures, external & internal protection of storage tanks for all services, etc. The items listed in the heading of tables of paint systems is indicative only, however, the contractor is fully responsible for carrying out all the necessary painting, coating and lining on external and internal surfaces as per the tender requirement.

# 2 CODES, REGULATIONS AND STANDARDS

2.1 External painting and protective coating shall meet or exceed the requirements of the latest edition of the following codes, regulations and standards, except as superseded herein. In cases where more than one code, regulation or standard apply to the same condition, the most stringent shall be followed. In the event of a conflict between this specification and other specifications or correspondence, the WP/HPCL shall be consulted and a ruling, in writing, shall be obtained before any work is started.

- Codes, Regulations and Statutes of Authorities having jurisdiction in location of installation.
- Steel Structures Painting Council Manual SSPC 1 to SSPC10
- IS 5 - Colour coding
- IS 101 - Methods of Tests for ready mixed paints and Enamels
- IS 2379 – Colour codes for the identification of pipelines
- ASA A 13.1 – 1981 - Scheme for Identification of piping system
- ASTM-Vol 6.01 & 6.03 - American standard test methods for Paints and Coatings
- Steel Structures Painting Council, U.S.A. (Surface Preparation Specifications (SSPC-SP).
- Swedish Standard – SIS-05 5900-1967 / ISO 8501-1 : ISO standard for Preparation of steel substrates before application of paints and related products.

| | |
|---|---|
| White Metal | SA 3 |
| Near White Metal | SA 2 ½ |
| Commercial Blast | SA 2 |
| Brush of blast | SA 1 |

- ISO 12944 – A global Corrosion Standard
- Industry Quality Control Manual

2.2 Some requirements in this specification may be modified by specific requirements in the Purchase Specification. In case of conflict, the specific requirements supersede this specification.

The order of precedence of documents is as follows:

1) Purchase order
2) Equipment Data sheets
3) This specification
4) Owner's Specifications
5) Referenced International Codes and Standards.

2.3 Any deviation from this specification must be approved, in writing, by WP/HPCL. Such written approval must be obtained prior to the commencement of any work which would constitute such a deviation.

# 3 GENERAL

## 3.1 Workmanship

Work shall be done by qualified and competent craftsmens in a neat and workman like manner conforming to code requirements and industry standards. This technical specification shall be applicable for the work covered by the contract, and without prejudice to the provisions of various codes of practice, standard specifications etc. It is understood that contractor shall carry out the work in all respects with the best quality of materials and workmanship and in accordance with the best engineering practice.

## 3.2 Marking Conditions

Where elevated structures require marking for safety consideration, they shall be marked in accordance with the requirements or the Authority having jurisdiction.

# 4 MATERIALS

## 4.1 Storage of Materials

Materials shall be stored in Manufacturer's containers, clearly marked with Manufacturer's labels, under Manufacturer's specified storage condition.

## 4.2 Manufacturer's Recommendations

Materials shall be used and applied in accordance with this specification.

Manufacturer shall proceed with his proven recommended materials after seeking an approval from WP/HPCL.

## 4.3 Material & Painting for Instrument Items

1. Material of construction of junction box shall be LM-6 cast aluminum.

2. Color of instrumentation panel shall be gray - RAL-7035.

3. All cable trays shall be made of E-Glass reinforced Flame retardant Isophthallic polyster (minimum Glass content 45%) and should be corrosion resistant and Fire retardant (Class 1, Fire rating) in accordance with the latest ASTM E-84/IS-6746.
4. Vendor may follow this specification or their standard coating system for Actuators.

# 5 EXTENT OF PAINTING

## 5.1 Surfaces to be painted

The following surfaces and materials shall require shop, pre-erection and field painting:

- All uninsulated C.S. & A.S. equipment like columns, vessels, drums, storage tanks, heat exchangers, pumps, compressors, electrical panels and motors etc.
- All uninsulated carbon and low alloy piping, fittings and valves (including painting of identification marks), furnace, and stack.
- All items contained in a package unit as necessary.
- All structural steel work, pipe, structural steel supports, walkways, handrails, ladders, platforms etc.
- Identification colour bands on all piping as required including insulated aluminium clad, galvanized, SS and nonferrous piping.
- Identification lettering/ numbering on all painted surfaces of equipment/piping insulated aluminium clad, galvanized, SS and nonferrous piping.
- Marking / identification signs on painted surfaces of equipment/piping for Hazardous service.
- Supply of all primers, paints and all other materials required for painting other than Owner's supply.
- Over insulation surface of equipments and pipes wherever required.
- Painting under insulation for carbon steel.
- Painting of pre-erection/fabrication.
- Repair work of damaged/ pre-erection/ fabrication shop primer and weld joints at field.

### 5.2 Surfaces NOT to be painted

The following are **not** to be painted and must be **protected** from painting. However, if there is any specific requirement by the owner, the same shall be painted as per the relevant specifications:

- Porcelain
- Gauge Glasses
- Meter Faces
- Valve Stem and Threads
- Working Surfaces of Equipment
- Name Plates
- Aluminium, Plastic and Stainless Steel
- Insulation or Fireproofing
- Galvanized Steel
- Concrete, Transite, Masonry, Stucco, etc.
- Uninsulated austenitic stainless steel.
- Plastic and/or plastic coated materials
- Non-ferrous materials like aluminum.

5.2.1 All non-painted surfaces adjacent to panting surface must be masked & protected. Masking or compounds used to protect non-painted surface must be removed prior to completion of the job.

## 6 EXPOSURE CONDITIONS

6.1 Coating requirements are primarily determined by exposure conditions. The types and severity of exposures are outlined in the Appendixes 2.0. These Appendices are to be used in selecting a coating system for facilities where conditions are expected to be similar to those shown as per the charts.

6.2 Exposure conditions may overlap in a single location or a change in operation may bring a change of exposure conditions, either more or less severe.

6.3 Exposure Areas selected for this specific project – Definitions

6.3.1 Area Classification C3 as per ISO 12944 (See Appendix 2.0).

This exposure area shall be defined as any area where Urban and industrial atmospheres, moderate sulphur dioxide levels production areas with chemical fumes, mist or dust can combine with high humidity and condensed moisture to corrode carbon steel at rates greater than 150 micrometers per year and corrode zinc at rates greater than 25 micrometers per year. Local rates of pitting corrosion may be higher.

Other areas that are having equipment and surfaces operating above 66 deg. C and are subject to spills of corrosive materials.

Examples of areas where severe exposure conditions exist are sulphur plant areas, sulphur loading areas, chlorination units, areas within 15m radius of cooling towers and areas with high concentrations of solvent and alkaline fumes.

6.3.2 Areas Classification C1/C2 as per ISO 12944.

This exposure area shall be defined as rural area, Low pollution, heated buildings/Natural atmosphere, normal outdoor weathering and/or light concentrations of chemical fumes that combine with humidity and condensed moisture to corrode carbon steel at rates of 80 micrometers or less per year and zinc is almost free of corrosion.

Examples of areas are most tank farms, areas where moderate exposure conditions may be found and equipment operating at a temperature such that condensation forms on equipment externals.

6.4 Decide on the design life (durability) of the coating system

ISO 12944 Durability ranges (Time to first major maintenance)

| | |
|---|---|
| High Durability | > 15 years design life |
| Medium Durability | 5 to 15 years design life |
| Low Durability | < 5 years design life |

For this Project specific Durability of 7 years selected.

# 7 AMBIENT LIMITATIONS

## 7.1 Surface Preparation and Material Application

Surface preparation and material application is advisable when ambient temperature of the atmosphere is at maximum level. Surface preparation and primer application shall be done only in

painting booth. Selected surface preparation standard for this project specific is SA 2 ½ unless specified exclusively otherwise.

No surface preparation or application of material may take place under the following conditions:

* Wet or damp atmosphere
* Noticeable wind
* Atmosphere contaminated by dirt, dust, oil, product or any other pollutant
* No primer shall be applied without witnessing of surface preparation & paint mixing by Project Consultant/Designated Site Engineer.

All tools, brushes, rollers, spray guns, blast material, hand power tools for cleaning and all equipments, scaffolding materials, shot & grit blasting equipments & air compressors etc. required to be used shall be suitable for the work and all in good order and shall be arranged by the contractor at site and in sufficient quantity. The manufacturer's test certificates / data sheets for all the above items shall be reviewed by site engineer at site before start of work.

Mechanical mixer shall be used for paint mixing operations in case of two pack systems except that the site engineer may allow the hand mixing of small quantities at his discretion in case of specific requirement for touch up work only.

### 7.2 Ventilation

During all stages of surface preparation and application of material, adequate ventilation must be assured.

## 8 SURFACE PREPARATION

In order to achieve the maximum durability following method of surface preparation shall be followed, depending on condition of surface to be painted. Adhesion of the paint film to surface depends largely on the degree of cleanliness of the metal surface. Proper surface preparation contributes more to the success of the paint protective system.

### 8.1 Abrasive Blast Cleaning

8.1.1 The steel surface shall be cleaned by either abrasive blast cleaning or shot-blasting.

Remove all other contaminants, oil, grease etc. by use of an aromatic solvent prior to surface cleaning.

8.1.2 All rough welds, burrs and sharp surface projections shall be ground smooth and all weld splatter shall be removed prior to blasting operations.

8.1.3 Blast cleaning operations shall not be conducted on surfaces that will be wet after blasting and before coating. Blast cleaning shall not be performed where dust can contaminate surfaces undergoing such cleaning or during humid weather conditions having humidity exceed 85%.

8.1.4 The blast cleaned surface shall be coated with one application of specified primer during the same day as blasted, prior to sundown of that day and before any visible rusting occurs. Blast cleaned surfaces allowed to set overnight shall be reblasted prior to priming.

8.1.5 Sandblast sand shall be fresh water washed, controlled particle size, high silica content sand, with sharp angular surfaces and no soft particles to ensure fast, positive cleaning action with a minimum of dusting when used to blast clean metal surfaces. Under no circumstances shall it contain clay particles or any other extraneous matter.

8.1.6 Profile depth of the abrasive blast cleaned surface shall not be less than 25 nor greater than 40 micrometers

8.1.7 The compressed air for blasting shall be free of water and oil.

8.1.8 No coating shall be permitted to be applied over scale, rust, oil, grit or other foreign material. All sand, shot and grit will be removed by brush, air blast or vacuum type cleaner prior to applying primer. Care shall be exercised to assure that the cleaned surface is not contaminated with any foreign material or fingerprints prior to applying primer.

8.1.9 Surface preparation of fabricated items to be painted in the shop shall be done in an area free of dust and contaminants from other shop work.

8.1.10 Irrespective of the method of surface preparation, the first coat of primer must be applied by airless spray/ air assisted conventional spray if recommended by the paint manufacturer on dry surface. This should be done immediately and in any case within 4 hours of cleaning of surface. However, at times of unfavorable weather conditions, the site engineer shall have the liberty to control the time period, at his sole discretion and/or to insist on recleaning, as may be required, before primer application is taken up. In general, during unfavorable weather conditions, blasting and painting shall be avoided as far as practicable.

# 9 PRIMING AND FINISHING

## 9.1 Manufacturer's Recommendations

The finish and primer paint Manufacturer's recommendations on application and surface preparation are to take precedence over these general specifications.

## 9.2 Application Procedures

9.2.1 Mixing of Paint shall be done only in the presence of Consultant. The normal method of application shall be airless spraying method.

9.2.2 The gun shall be at right angles to the surface and 20 cm to 25 cm from the surface.

9.2.3 Each pass of the gun shall overlap by 50%.

9.2.4 When a pause in spraying occurs, the material shall be blown back into the pot.

9.2.5 The material in the pot shall be kept thoroughly mixed at all times.

9.2.6 Any material not used in its pot life shall be destroyed and the containers used **thoroughly** cleaned.

9.2.7 No spraying shall be done within 15 cm of unprepared surfaces.

9.2.8 Prime coating shall be applied soon after preparation - before flash rusting occurs.

9.2.9 Finish coating shall be applied as soon as possible after the underlying coat is in condition to receive it, according to Manufacturer's specifications.

9.2.10 Care must be taken to ensure that "hard to get at" places are properly primed and painted, that there is no bridging, etc.

9.2.11 Thickness gauge shall be used to determine that a complete even coat has been applied for each primer and finish coat.

9.2.12 No coat shall be applied until the preceding coat has dried. The material shall be considered dry for re-coating when another coat can be applied without the development of any film irregularities such as lifting or loss of adhesion of undercoats. Drying time of the applied coat should not exceed maximum specified for it as a first coat; if it exceeds the paint material has possibly deteriorated or mixing is faulty.

9.2.13 No paint shall be force dried under conditions which will cause checking, wrinkling, blistering formation of pores, or detrimentally affect the conditions of the paint.

9.2.14 No drier shall be added to paint on the job unless specifically called for in the manufacturer's specification for the paint.

9.2.15 Paint shall be protected from rain, condensation, contamination, snow and freezing until dry to the fullest extent practicable.

9.2.16 Ingredients shall be kept properly mixed in the spray pots or containers during application by continuous mechanical agitation.

9.2.17 Blast cleaned surface shall be coated with one complete application of primer as soon as practicable but in no case later than 4 hrs the same day.

9.2.18 Spray equipment shall be kept sufficiently clean so that dirt, dried paint, and other foreign materials are not deposited in the paint film.

9.2.19 Any solvents left in the equipment shall be completely removed before applying paint to the surface being painted.

9.2.20 Paint shall be applied in a uniform layer, with overlapping at the edge of the spray pattern. The spray patterns shall be adjusted so that the paint is deposited uniformly. During application, the gun shall be held perpendicular to the surface and at a distance which will ensure that a wet layer of paint is deposited on the surface. The trigger of the gun should be released at the end of each stroke.

9.2.21 All runs and sags shall be brushed out immediately or the paint shall be removed and the surface repainted.

9.2.22 All nameplates, manufacturer's identification tags, machined surfaces, instrument glass, finished flange faces, control valve items and similar items shall be masked to prohibit coating deposition. If these surfaces are coated, the component shall be cleaned and resorted to its original condition.

9.2.23 If spray gun shows choking, immediately de-choking procedure shall be followed.

## 9.3 Types of Primer

See below table.

| Sr. No. | Description | P01 | P02 | P03 | P04 | P05 |
|---|---|---|---|---|---|---|
| A | Technical Name | Epoxy Zinc Phosphate Primer | Metallic Zinc Rich Epoxy Primer | Inorganic Zinc Silicate | Tank Mastic or High Build Coal tar Epoxy | Epliux FRX Durabuild Coating |
| B | Type of Composition | Two Components Low VOC, High Solids, fast Curing, pigmented with zinc phosphate | Two components, Composition and performance requirements of SSPC Paint 20 | Two Pack air drying self solvent based inorganic Zinc Silicate coating | Two pack polyamide curred epoxy resin blended with coal tar medium, suitably pigmented | Catalysed Epoxy resin with special catalyst, pigmented with Zinc phosphate |
| C | Volume of Solids (approx.) | 70% | 59 % | 60% | 65% | 60% |
| D | Theoretical covering Capacity in M2/coat/litre (approx.) | 4 - 6 | 8 - 10 | 8-9 | 5-7 | 4-8 |
| E | Loss Factor | 40% | 45% | 35% | 45% | 30-35% |
| F | Thinning | 5% | 5% | 5% | 5% | 5% |

## 9.4 Types of Intermediate/Finish Paint

See below table for types of finish paint. Where required coats of finish as per Appendix 2.0 are to be applied, the first coat is to be discoloured (1 paint of contrasting shade to every gallon of main colour), so as to aid visual inspection for holidays, coverage and wear, etc.).

| Sr. No. | Description | F01 | F02 | F03 | F04 |
|---|---|---|---|---|---|
| A | Technical Name | Acrylic Polyurethane finish paint | Epoxy High build finish paint (Polyamide) | Self priming type surface tolerant high build epoxy coating. (complete rust control Coating) | Epliux Super High Build Coating |
| B | Type of Composition | Two Pack aliphatic isocynate cured acrylic finish paint | Two pack polyamide/polyamine cured epoxy resin medium suitably pigmented | Two pack epoxy resin based suitable pigmented and capable of adhering to manually prepared surface | Catalysed Epoxy resin, suitably pigmented |
| C | Volume of Solids (approx.) | 57% | 62 % | 80% | - |
| D | Theoretical covering Capacity in M2/coat/litre (approx.) | 10-13 | 5-6 | 5-7 | 4-5 |
| E | Weight per litre in kgs/litre (approx.) | 1.3 | 1.4 | 1.4 | - |
| F | Loss Factor | 30% | 30% | 30% | 30-35% |
| G | Thinning | 5% | 5% | 5% | 5-8% |

## 9.5 Paint System

For this project specific system selected C3 as per Cl. 6.3.1, the selected paint system is also suitable upto 90 deg C temperature for specific requirements.

Following options, Option 1 for Tank outside and Piping, Option 2 for Tank bottom plate soil side, Option 3 for Inside Tank bottom plate and inside shell up to 1mtr. from bottom, Option 4 for Floating Roof Tanks roof.

**Option 1- Tank outside and Piping, Structural**

| Paint | Type | DFT(µ) |
|---|---|---|
| Primer | P03 | 70x1 |
| Intermediate Coat | F02 | 100 |
| Final Coat | F01 | 2 X40 |
| TOTAL DFT | | 250 |

**Option 2 - Tank Bottom Plate soil side**

| Paint | Type | DFT(µ) |
|---|---|---|
| Primer | P04 | 2 X100 |
| TOTAL DFT | | 200 |

**Option 3- Tank Bottom Plate and Inside shell up to 1mtr from bottom**

| Paint | Type | DFT(µ) |
|---|---|---|
| Primer | P03 | 70 |
| Final Coat | F04 | 125 |
| TOTAL DFT | | 195 |

**Option 4- Fixed & Floating Roof Tanks**

| Paint | Type | DFT(µ) |
|---|---|---|
| Primer | P05 | 2X100 |
| Final Coat | F04 | 2X50 |
| TOTAL DFT | | 300 |

## 10 INSPECTION

10.1 The WP/HPCL's representative shall have access to all work while being performed and shall be given sufficient notification to complete all required inspections.

10.2 All prepared surfaces shall be subject to inspection by WP/HPCL's representative and approval before primer is applied.

10.3 Paint dry film thickness shall be as per this specification. Failure to meet specified thickness requirement shall cause work to be rejected.

10.4 Paint shall not be thinned beyond Manufacturer's recommendation and if WP/HPCL requires it, a viscosity check shall be made.

10.5 Work will be rejected because of poor workmanship. Poor workmanship is defined as inadequate drying or curing, dirt and dust inclusions, overspray, pin-holes, runs and sags, or inadequate film build.

10.6 Acceptable finish work must be free of abrasions and must be uniform in colour and appearance.

10.7 All painting materials including primers and thinners brought to site by contractor for application shall be procured directly from manufactures as per specifications and shall be accompanied by manufacturer's test certificates. Paint formulations without certificates are not acceptable.

10.8 The contractor shall produce test reports from manufacturer regarding the quality of the particular batch of paint supplied. The site engineer shall have the right to test wet samples of paint at random for quality of same. Batch test reports of the manufacturer's for each batch of paints supplied shall be made available by the contractor.

10.9 The painting work shall be subject to inspection by site engineer at all times. In particular, following stage wise inspection will be performed and contractor shall offer the work for inspection and approval of every stage before proceeding with the next stage. The record of inspection shall be maintained in the registers. Stages of inspection are as follows:

(a) Surface preparation
(b) Primer application
(c) Each coat of paint

10.10 Any defect noticed during the various stages of inspection shall be rectified by the contractor to the entire satisfaction of site engineer before proceeding further. Irrespective of the inspection, repair and approval at intermediate stages of work, contractor shall be responsible for making good any defects found during final inspection/guarantee period/defect liability period as defined in general condition of contract. Dry film thickness (DFT)) shall be checked and recorded after application of each coat and

extra coat of paint should be applied to make-up the DFT specified without any extra cost to owner, the extra coat should have prior approval of site engineer.

10.11 After surface preparation, the primer should be applied to cover the crevices, corners, sharp edges etc.

10.12 The shades of successive coats should be slightly different in colour in order to ensure application of individual coats, the thickness of each coat and complete coverage should be checked as per provision of this specification.

10.13 The contractor shall provide standard thickness measurement instrument with appropriate range(s) for measuring.

10.14 Dry film thickness of each coat & surface profile gauge for checking of surface profile in case of sand blasting shall be measured. Holiday detectors and pinhole detector & protector shall be used whenever required for checking in case of immersion conditions.

10.15 Final inspection shall include measurement of paint dry film thickness, Adhesion, Holiday detection check of finish and workmanship. The thickness should be measured at as many points/ locations as decided by site engineer and shall be within + 10% of the dry film thickness, specified in the specifications.

## 11 GUARANTEE

Contractor shall guarantee painting against any defect including poor workmanship and improper application. This guarantee shall remain in effect for seven (7) years from the date painting is completed or after final inspection release note from consultant. Contractor shall repair at his own expense any defects noted during the guarantee period.

The contractor shall guarantee that the chemical and physical properties of paint materials used are in accordance with the specifications contained herein/to be provided during execution of work.

# 12 COATING & WRAPPING

## 12.1 Scope

This specification covers the requirement of material, surface preparation, application, inspection, repairs and handling of wrapping and coating at site for underground steel pipeline with service temperature up to 60°c, using coating & wrapping materials confirming to AWWA C-203 (Latest edition).

## 12.2 Procedure

**1. Surface Preparation**

All oil, grease on the pipe metal surface shall be thoroughly removed by flushing with a suitable solvent. (Such as xylen or 1:1:1 trichloroethylene) and wiping with clean tags. The degreased pipe metal surface shall be grit blasted to get surface to confirm Swedish Standard SA-2 ½ of SSPC-SP10, Surface profile shall be uniform to provide good key to paint (50-75 micron depth).

**2. Priming**

Immediately after grit blasting the surface shall be applied with fast drying unmodified pure chlorinated rubber based coal tar synthetic primer.
Second coat of primer to be applied before application of coal tar enamel. The entire surface of pipe should be primed. No specific time gap between two coats of primer needs to be maintained but after the second coat of primer, the enamel coating should start before the primer is completely hardened.

**3. Preparation of Coating Material**

The coal tar enamel shall be supplied in metal drums that shall be cropped or cut out on a suitable platform to prevent the enamel coming in contact with wooden cinders, grass and other forms of contamination. The enamel shall be as per AWWA C-203.The cropped out pieces of enamel may not weigh more than 10 Kgs. The broken pieces shall be placed in a clean melting kettle which is made of heavy duty, MS sheet in form of closed vessel. The vessel should have manual operating stirring arrangement. It is also having special type of heating arrangement with fuel as kerosene oil/diesel. To maintain uniform coverage of material required quantity of enamel is heated in the kettle with temperature range of 230°c to 240°c (application temperature). Temperature of enamel can be checked by dipping thermometer in the enamel.
Thermometer shall be used in heating kettle in such a way so as to read the temperature clearly. The thermometer shall have temperature range up to 300°c.

**4. Mechanical Application of Coating & Wrapping**

**i.** The pipe shall be kept rotating on a machine having circumferential and linear motions, while the pipes are in rotating condition, pour the hot coal tar enamel manually and spread uniformly with the help of rubber brushes.

**ii.** Simultaneously, one wrap of glass fiber tissue shall be applied over the molten coal tar enamel. Initially, the wrap is held with hand and pressed over the molten enamel. There after the revolving pipe puffs the fiber wrap from the reel, which ensures continuous wrapping over the molten enamel with the required overlap (i.e.: 13 mm)

**iii.** Second coat of coal tar enamel as well as glass fiber tissue paper shall be applied as per above procedure (i.e. sr. no. i & ii).

**iv.** Third coat of molten coal tar enamel shall be applied next.

Final, outer wrap of impregnated fiber shall be applied immediately over the third coat of coal tar enamel, similar to inner wrap application procedure as given in sr. no. i & ii above.
The overlap at edges of all wrappings should be minimum 13 mm. The coating shall be continuous for the full length of the pipe except 200mm at both ends of the pipes.
Finally, carry out white wash with Acrylic water emulsion Latex Paint Material.
This application will be carried out manually by paint brushes. There after the pipes is lifted by suitable methods and allowed to dry on wooden sleepers.

## 12.3 Coating & Wrapping Materials

All coating and wrapping materials for underground piping shall be procured from the manufacturers approved by WP/HPCL and all material shall be used with in shelf life period.
The primer and coal tar enamel shall be compatible and shall be of the same manufacturer.

## 12.4 Inspection

**1.** Thickness - Thickness of the coal tar enamel coating shall be measured with the digital thickness gauge. Minimal acceptable thickness shall be 4.5mm.

**2.** Electrical Inspection - All coated and wrapped pipes shall be tested with the positive signalling device to indicate any fault, holes, breaks or conductive particles in the coating. The test voltage shall be 13 KV.

**3.** Peel Off Test - Peel test shall be conducted at temperature from 10°c to 25°c as per AWWA-203 methods. Acceptable criteria shall be as per AWWA-203.

## 12.5 Repairs

Wherever any holiday is observed or any defective work is found, remove the wrapping and coating to the required extend from those areas by using a sharp knife. Then heated enamel shall be applied manually over the area following the procedure described above and inner and outer wrap applied. Holidays test shall be repeated for the portion.

## 12.6 Handling of Coated Pipes

The coated pipes shall be handled at all times with equipments such as wide belt slings and wide padded skids designed to prevent damage to the coating. Bare cables, chains, hooks etc. shall not be permitted to come in contact with coatings. A suitable crane may be used.
Coated pipes shall be supported at two bare ends clear from ground either on skids or sand bags.

## 12.7 Safety Precautions

Adequate and proper PPE shall be provided to persons involved in short of grit blasting work.
Adequate and proper PPE shall be provided to all persons involved in hot application of coal tar enamel along with the wraps.

Proper fire fighting system shall be provided during application of primer and enamel coats and all safety requirements shall be ensured for the underground trenching, lowering and back filling.
All precaution shall be observed as per the instruction of OWNER.

## 12.8 Guarantee

The guarantee of the coal tar enamel coating and wrappings performance shall be at least 5 yrs. After the system is put under the operation.

## 12.9 Reference

AWWA C-203 – Coal tar protective coating linings to carbon steel pipeline.
SSPC-SP10 – Steel Structure Painting Council, Surface Preparation Specification.
ASTM G8 – Test method for cathodic Disbonding of pipeline coating.

## APPENDIX - 1.0

## PAINT COLOUR CODE FOR PIPING AND EQUIPMENT:

### SCOPE

This specification covers the requirement of colour scheme for the identification of the contents of the pipelines carrying fluids, storage tanks and equipments in refineries, terminals and petrochemical installations. The following colour coding system has been made based on international standards like ASME, BS and Indian Standard.

### IDENTIFICATION

The system of colour coding consists of a ground colour and secondary colour bands superimposed over the ground colour. The ground colour identifies the basic nature of the service and secondary colour band over the ground colour distinguishes the particular service. The ground colour shall be applied over the entire length of the uninsulated pipes. For insulated lines ground colour shall be provided as per specified length to identify the particular service.

The following ground colour designation for identification of basic classification of various important services shall be followed:

| | |
|---|---|
| Post Office Red | Fire protection materials |
| Orange | Volatile petroleum products (motor spirit and Lighter) |
| Oxide Red | Non- Volatile Petroleum Products (SKO and heavier, Including HSD) |
| Black | Slop Oils |
| Sky Blue | Water (All purities and temperature) |
| Sea Green | Air and its components |

Secondary colours: the narrow bands presenting the secondary colour which identifies the specific service may be applied by painting or preferably by use of adhesive plastic tapes of the specific colour.

## COLOUR BANDS AND IDENTIFICATION LETTERING

Colour band and lettering shall be done in with the same paint as for finished coat. The details given in Industry Quality Control Manual shall only be followed, unless specified otherwise exclusively.

The following specifications of colour bands shall be followed.

For identifying the piping contents, size of letters in legends will depend to some extent upon the pipe diameter. Either white or black letters are selected to provide max. contrast to the band colour. Bands usually are 50mm wide and regardless of band width, are spaced 25 mm apart when two bands are employed.

Colour Bands and sizing of lettering for piping as per IS 2379:

| Size of Pipe or Covering in inch | Width of Colour Bands in mm | Size of Legend Letters in mm |
|---|---|---|
| ¾” to 1” | 200 | 10 |
| 11/2” to 2” | 200 | 20 |
| 3” to 6” | 300 | 30 |
| 8” to 10” | 600 | 63 |
| Over 10” | 800 | 90 |

Size of the letters stencilled / written for equipments shall be as given below:

Vessel - 150mm (Height)

Pump, and other machinery - 50 mm (Height)

Colour Bands: The location and size of the Bands, as recommended, when used, shall be applied to the pipe.

- On both side of the valves, tees and other fittings of importance.
- Where the pipe enters and emerges from wall and where it emerges from road and walkway overpasses, unit battery limits.
- At uniform intervals along long section of pipe.
- Adjacent to Tanks, Vessels and Pumps.

For piping, writing of name of service and direction of flow for all the lines shall be done at following location.

- The letters will be black on pipes painted with light shade colours and white on pipes painted with dark shade colour to give good contrast.
- On stainless steel line precaution should be taken while painting by using low chloride content.

Colour Band Specification:

a) Unit area; bands at intervals of 6.0 Mtrs.
b) Offsite area: Bands at intervals of 10.0 Mtrs.
c) Each pipe segment will have min. one band indication, irrespective of length.
d) The band shall be displayed near walkway, both side of culverts, tank dykes, tanks, Vessels, suction and discharge of Pumps, unit battery limit, near valves of line, etc.
e) In case of camouflaging requirements of civil defence or any other location requirement, the same shall be followed accordingly.

The specification for application of the complete piping identification colour code, including base and bands colours, are presented in the enclosed table.

| Sr. No. | Service | Recommended color Code |
|---|---|---|
| | Hydrocarbon Lines (Uninsulated) | |
| 1 | M.S., HSD, SKO, ATF, Naphtha (Common pipeline for these services) | WHITE WITH 1 DARK ADMIRALTY GREY BAND |
| 2 | M.S. | ORANGE WITH 1 DARK AD, GREY BAND |
| 3 | HSD | OXIDE RED WITH 1 WHITE BAND |
| 4 | SKO | OXIDE RED WITH 1 GREEN BAND |
| 5 | ATF | LIEF BROWN WITH 1 YELLOW BAND |
| 6 | NAPTHA | ORANGE WITH 1 GREEN BAND |
| 7 | SLOP & WASTE OIL | BLACK WITH ONE ORANGE BAND |
| 8 | CORROSION INHIBIBITOR | CANARY YELLOW WITH 1 ALUMINIUM BAND |

| | | |
|---|---|---|
| | WATER LINES (UNINSULATED) | |
| 9 | RAW WATER | SKY BLUE WITH 1 BLACK BAND |
| 10 | POTABLE WATER | SKY BLUE WITH GREEN RED BAND |
| 11 | SERVICE WATER | SKY BLUE WITH 1 SIGNAL RED BAND |
| | FIRE PROTACTION ABOVE GROUND(UNINSULATED) | |
| 12 | FIRE WATER FOAM AND EXTINGUISHERS | POST OFFICE RED |
| | UNINSULATED EQUIPMENT,TANKS & STRUCTURES | |
| 13 | VESSELS | ALUMINIUM / OFF WHITE |
| 14 | ALL OTHER TANKS | ALUMINIUM / OFF WHITE |
| 15 | PUMPS | NAVY BLUE |
| 16 | HAND RAILINGS | SIGNAL RED |
| 17 | STAIRCASE, LADDER & WALKWAYS | BLACK |
| 18 | LOAD LIFTING EQUIPMENTS & MONO RAILS | LEAF BROWN |
| 19 | GENERAL STRUCTURES | BLACK |

Note:

Contractor shall follow Camouflaging requirements at locations falling under Defence requirement.

## APPENDIX - 2.0

| DESCRIPTION | AREA COVER | TEMP DEG. C | SURFACE PREPARATION | PRIMER | FINISH PAINT | Total DFT(µ) | REMARKS |
|---|---|---|---|---|---|---|---|
| Field Paint system for C3 Environment for CS | For Uninsulated Structures, Piping, Equipments, Rotary Eqpts etc. | -14 to 80 | SA-2 ½ | 1 coat of P03 of 70µ DFT | 1 coat of F02 of 100 DFT + 2 coats of F01 of 40µ DFT/ Coat | 250 | |
| Field Paint System for CS Storage tanks (External) for C3 Environment | External shell, wind Girders as well as and associated structural works, for all environment for HSD, ATF, SKO, MS, fire water, raw water, potable water etc. | -14 to 80 | SA-2 ½ | 1 coat of P03 of 70µ DFT | 1 coat of F02 of 100 DFT + 2 coats of F01 of 40µ DFT/ Coat | 305 | Contractor shall follow Camouflaging requirements at locations falling under Defence requirement |
| Field Paint System for CS Storage tanks roof (External) for C3 Environment | Roof top of all above ground tank including top side of floating roof of open tank as well as and associated structural works, rolling and stationary ladders, spiral stairway, hand rail for all environment for HSD, ATF, SKO, MS, | -14 to 80 | SA-2 ½ | 2 Coats of P05 of 100 DFT/ Coat | 2 Coats of F04 of 50 DFT/ Coat | 300 | Contractor shall follow Camouflaging requirements at locations falling under Defence requirement |
| Field Paint System for CS Storage tanks (External) for C3 environments | External Surface of bottom plate (Soil Side) for all Storage tank | -14 to 80 | SA-2 ½ | 2 Coats of P04 of 100 DFT/Coat | - | 200 | |

| | | | | | | | |
|---|---|---|---|---|---|---|---|
| Field Paint System for CS Storage tanks (Internal) for C3 environments | Internal surface of Tanks Bottom plate and Tank shell up to 1 mtr. height from bottom plate | -14 to 80 | SA-2 ½ | 1 coat of P03 of 70µ DFT | 1 coat of F04 of 125µ DFT | 195 | |
| Coating system for External Side of Underground CS Plant Piping & Tanks | Yard and Over the ditch coating | 25 to 60 | SA-2 ½ | 2 Coats of P02 of 75 DFT | 4.5 mm Thk. coal tar coating Wrapping as per AWWA-C-203 & Cl. 12 of this spec. | 4 mm | |

WorleyParsons
resources & energy

# VVSPL CAPACITY AUGMENTATION PROJECT

# Specification for Induction Motor

Project No: 403102-14495

Document No: 14495-00-EL-SPC-0009

08 Feb 2017

I-Think Lodha Techno Campus,
5th Floor, Tower B,
Pokhran Road No. 2
Thane (West) – 400607
Tel: +91 2266515700
Fax: +91 2267818000

© Copyright 2017 WorleyParsons

# SYNOPSIS

This document presents Specification for Induction Motor for the VVSPL Capacity Augmentation Project.

**Disclaimer**

This document has been prepared on behalf of and for the exclusive use of HPCL, and is subject to and issued in accordance with the agreement between HPCL and WorleyParsons India Pvt Ltd.

WorleyParsons India Pvt Ltd accepts no liability or responsibility whatsoever for it in respect of any use of or reliance upon this document by any third party.

Copying this document without the permission of HPCL or WorleyParsons is not permitted.

**VVSPL CAPACITY AUGMENTATION PROJECT**

| REV | DESCRIPTION | ORIG | REVIEW | WORLEY-PARSONS APPROVAL | DATE | CUSTOMER APPROVAL | DATE |
|---|---|---|---|---|---|---|---|
| A | Issued for Information | PARS | DOLV | KAMK | 08-Feb-17 | | |
| | | | | | | | |
| | | | | | | | |

# CONTENTS

1 SCOPE ..... 4
2 CODES AND STANDARDS ..... 4
3 GENERAL REQUIREMENTS ..... 6
4 SITE CONDITIONS ..... 6
5 DESIGN AND FABRICATION REQUIREMENTS ..... 7
6 INSPECTION AND TESTING ..... 19
7 PACKING AND DESPATCH ..... 21

## 1 SCOPE

This specification covers the minimum requirements for the design, material, manufacturing, inspection, testing, supply, shipment and delivery to site of squirrel cage induction motor for VVSPL Capacity Augmentation Project.

The Vendor shall be fully responsible for the design, material, manufacturing, inspection, testing and delivery of squirrel cage induction motor at site.

**Definitions**

| | | |
|---|---|---|
| Purchaser | : | Hindustan Petroleum Corporation Limited |
| Engineer / Consultant | : | WorleyParsons India Pvt. Ltd. |
| Vendor / Manufacturer | : | Supplier of squirrel cage induction motor |

## 2 CODES AND STANDARDS

2.1 The equipment shall comply with the requirements of latest revision of following standards issued by BIS (Bureau of Indian Standards), unless otherwise specified:

| | |
|---|---|
| IS 5 | Colours for ready mixed paints and enamels |
| IS 325 | Three phase induction motors |
| IS 1076 | Preferred numbers |
| IS 1231 | Dimensions of three-phase foot-mounted induction motors |
| IS 1271 | Electrical insulation - Thermal evaluation and designation |
| IS 2071 | High voltage test techniques |
| IS 2223 | Dimensions of flange mounted ac induction motors |
| IS 2253 | Designation for types of construction and mounting arrangement of rotating electrical machines |
| IS 2253 | Designation for types of construction and mounting arrangement of rotating electrical machines |
| IS 2968 | Dimensions of slide rails electric motors |
| IS 4029 | Guide for testing three-phase induction motors |
| IS 4889 | Methods of determination of efficiency of rotating electrical machines |
| IS 6362 | Designation of methods of cooling of rotating electrical machines |
| IS 7816 | Guide for testing insulation resistance of rotating machines |

| | |
|---|---|
| IS 8223 | Dimensions and output series for rotating electrical machines |
| IS 8789 | Values of performance characteristics for three-phase induction motors |
| IS 9283 | Motors for submersible pumpsets |
| IS 9628 | Three-phase induction motors with type of protection 'n' |
| IS 12065 | Permissible limits of noise level for rotating electrical machines |
| IS 12075 | Mechanical Vibration of rotating electrical machines with shaft heights 56 mm and higher - Measurement, evaluation and limits of vibration severity |
| IS 12615 | Energy Efficient Induction Motors - Three Phase Squirrel Cage |
| IS 13529 | Guide on effects of unbalanced voltages on the performance of three-phase cage induction motors |
| IS 13555 | Guide for selection and application of 3-Phase A. C. induction motors for different types of driven equipment |
| IS 14222 | Impulse Voltage Withstand Levels of Rotating a.c. Machines with Form-wound Stator Coils |
| IS 14568 : Part 2 | Dimensions and output series for rotating electrical machines : Part 2 - Frame numbers 355 to 1000 and flange numbers 1180 to 2360 |
| IS/IEC 60034-1 | Rotating electrical machines : Part 1 - Rating and performance |
| IS/IEC 60034-5 | Rotating electrical machines : Part 5 - Degrees of protection provided by the integral design of rotating electrical machines (IP CODE) - Classification |
| IS/IEC 60034-8 | Rotating electrical machines : Part 8 - Terminal markings and direction of rotation |
| IS/IEC 60079-0 | Electrical apparatus for explosive gas atmospheres : Part 0 – General Requirements |
| IS/IEC 60079-1 | Electrical apparatus for explosive gas atmospheres : Part 1 - Flameproof enclosures "d" |
| IS/IEC 60079-2 | Electrical apparatus for explosive gas atmospheres : Part 2 - Pressurized enclosure "p" |
| IS/IEC 60079-7 | Electrical apparatus for explosive gas atmospheres : Part 7 - Increased safety "e" |
| IS/IEC 60079-15 | Electrical apparatus for explosive gas atmospheres : Part 15 - Type of |

| | |
|---|---|
| | protection `n' |
| IS/IEC 60529 | Degree of protection provided by enclosures (IP code) |

2.2 In case of imported equipment, standards of the country of origin shall be applicable, if these standards are equivalent or stringent than the applicable Indian standards.

2.3 The equipment shall also conform to the provisions of Indian Electricity rules and other statutory regulations currently in force in the country.

2.4 In case Indian standards are not available for any equipment, standards issued by IEC/BS/VDE/IEEE/NEMA or equivalent agency shall be applicable.

2.5 In case of any contradiction between various referred standards/specifications/data sheet and statutory regulations the following order of priority shall govern:

- Statutory regulations
- Data sheets
- This specification
- Codes and standards

However the vendor shall bring any such contradiction to the notice of Purchaser for prior approval.

## 3 GENERAL REQUIREMENTS

3.1 The offered equipment shall be brand new with state of art technology and proven field track record. No prototype equipment shall be offered.

3.2 Vendor shall ensure availability of spare parts and maintenance support services for the offered equipment for at least for 15 years from the date of supply.

3.3 Vendor shall give a notice for at least one year to the Purchaser of equipment before phasing out the product/spares to enable the end user for placement of order for spares and services.

## 4 SITE CONDITIONS

4.1 The squirrel cage induction motor shall be suitable for installation and satisfactory operation in indoor or outdoor installation as specified in the data sheet with humid and corrosive atmosphere.

4.2 The squirrel cage induction motor shall be designed to operate under site conditions as specified in the data sheets. If not specifically mentioned therein, a design ambient temperature of 40$^{o}$C for indoor, 50$^{o}$C for outdoor and an altitude not exceeding 1000 metres above mean sea level shall be considered.

4.3 The squirrel cage induction motor described in this specification is intended for continuous duty at the specified ratings under the specified site conditions.

## 5 DESIGN AND FABRICATION REQUIREMENTS

### 5.1 General design

5.1.1 The motor shall be designed for continuous operation at rated output under following conditions.

a) The terminal voltage variation from its rated voltage as specified in the data sheet or.

b) The frequency variation from its rated frequency as specified in the data sheet or.

c) Any combination of (a) and (b).

5.1.2 Unless specified otherwise, motor shall be designed for direct on line starting.

5.1.3 The motor shall be designed for re-acceleration under full load after a momentary loss of voltage with the possibility of application of 100% of the rated voltage when the residual voltage has dropped down to 50% and is in phase opposition to the applied voltage.

5.1.4 Unless otherwise specified, all high voltage (above 650V & upto 33kV) induction motors shall be suitable for starting under specified load conditions with 80% of the rated voltage against the torque speed characteristics of the driven equipment.

a) Starting torque & minimum torque of the motor shall be compatible with speed torque characteristics of the driven equipment under specified starting & operating conditions.

b) For heavy duty type drives such as blowers, crushers, compressors etc high starting torque motor shall be provided. This shall be checked against the speed torque characteristics of the load and the thermal withstand characteristics of the motors.

Unless otherwise specified, all medium voltage (upto 650V) induction motors shall be suitable for starting under specified load conditions with 75% of the rated voltage at the motor terminals.

5.1.5 Motor shall be designed to allow the minimum number of consecutive starts indicated in Table-1 below.

TABLE-1

| **Minimum No. of Starts** | **Minimum number of consecutive starts** | | |
|---|---|---|---|
| | Medium Voltage induction motors | High voltage induction motors Upto 1000kW | High voltage induction motors Above 1000kW |
| Number of consecutive start ups with initial temperature of the motor | 3 | 3 | 2 |

| | | | |
|---|---|---|---|
| at design ambient level (Cold) | | | |
| Number of consecutive start ups with initial temperature of the motor at full load operating level (Hot) | 2 | 2 | 1 |

5.1.6 Unless specified otherwise, for high voltage induction motors, the locked rotor withstand time under hot condition at 100% voltage shall be minimum 5 seconds more than starting time at 100% voltage under specified load condition. For medium voltage induction motors, minimum locked rotor thermal withstand time at rated voltage shall be 10 seconds under cold conditions and 8 seconds under hot conditions. The starting time of the motor shall be less than the hot thermal withstand time (time $t_E$ in case of increased safety i.e. Ex'e' motors) to permit application of conventional bimetal relays or thermal release against locked rotor and overload conditions.

5.1.7 Motor shall be suitable for either direction of rotation. In case unidirectional fan is provided for the motor, direction of rotation for which the motor is designed shall be permanently indicated by means of an arrow. Any alteration required for obtaining a change in the direction of rotation such as reversal of fan must be clearly specified. High voltage induction motors which are suitable only for one direction of rotation shall have this direction of rotation clearly indicated on the motor together with a phase sequence of the terminals associated with this rotation in indelible marking. Directional arrow shall be manufactured from corrosion resistant material. When the motor is provided with bi-directional fans, a double headed arrow shall be provided.

Normally, clockwise rotation is desired as observed from driving (coupling) end. When terminal RYB are connected to as power supply giving a phase sequence in the order RYB, counter clockwise rotation of the motor shall be obtained by connecting the power supply to the terminals so that the phase sequence corresponds to reversed alphabetical sequence of the terminal letters. Ample space shall be provided at the terminal box for interchanging any two external leads for obtaining the reverse phase sequence.

**5.2 Performance**

5.2.1 Motor shall be rated for continuous duty ($S_1$), unless otherwise specified.

5.2.2 Motors shall have adequate torque to accelerate the load from zero to full speed under the specified starting and operating conditions.

5.2.3 The starting current (as % of rated current) shall not exceed 500% subject to tolerance for high voltage induction motors upto 1000kW. For high voltage induction motors above 1000kW, it shall be agreed with Purchaser for each case.

In case of medium voltage induction motor, the starting current (as % of rated current) shall not exceed 600% subject to tolerance unless otherwise specified.

5.2.4 In particular cases when starting current is to be limited, care shall be taken such that the design value of torque meets the load requirement while at the same time complying to clause 5.1 above of this specification.

5.2.5 In particular cases when the starting with reduced voltage is specified, care shall be taken such that the design value of torque meets the load requirement while at the same time complying to clause 5.1 above of this specification.

5.2.6 Starting torque and minimum torque of the motor shall be compatible with the speed torque curve of the driven equipment under specified starting and operating conditions. For heavy duty drives such as blowers, crushers etc high starting toque motors shall be provided. In case where characteristics of driven equipment are not available while selecting the motor, minimum starting torque shall be 110% of rated value for motors upto 75kW and shall be 90% of rated value for motors above 75kW.

5.2.7 The pull out torque at rated voltage shall be not less than 175 percent of the rated load torque with no negative tolerance. Unless otherwise agreed, the pull out torque shall not exceed 300% of the rated load torque.

In case of motors driving equipments with pulsating loads (e.g. reciprocating compressors), the minimum value of the pull out torque at 80% of rated voltage shall be more than the peak value of the pulsating torque and the current pulsation shall be limited to 40%.

5.2.7 The minimum value of product for efficiency and power factors for motors rated and upto and including 37kW shall be as per IS.

5.2.8 The minimum value of product for efficiency and power factors of 2-pole, 4-pole and 6-pole motors rated above 37kW shall be as given in Table-2 below

TABLE-2

| **Rated output** | **Product of efficiency and power factor at rated load (minimum)** | | |
|---|---|---|---|
| | **2-Pole** | **4-Pole** | **6-Pole** |
| 45kW | 0.82 | 0.80 | 0.79 |
| 55kW | 0.82 | 0.80 | 0.79 |
| 75kW | 0.82 | 0.80 | 0.80 |
| 90kW | 0.82 | 0.80 | 0.80 |
| 110kW | 0.86 | 0.80 | 0.80 |
| 125kW | 0.86 | 0.80 | 0.80 |
| 160kW | 0.86 | 0.81 | 0.80 |

| | | | |
|---|---|---|---|
| 180kW | 0.86 | 0.83 | 0.80 |
| 200kW | 0.86 | 0.83 | 0.80 |

Efficiency and power factor figures of motors having synchronous speed of 750 r.p.m. and below shall be as agreed between the Purchaser and the Vendor.

**5.3 Construction**

5.3.1 Windings and insulation

a) Unless otherwise specified, in the data sheet, motors shall be provided with class "F" insulation. The permissible temperature rise above the specified design ambient temperature shall be limited to those specified in applicable IS for class "B" insulation

b) The windings (along with the stator in case of high voltage induction motor) shall be tropicalized and shall be vacuum impregnated. Alternatively for medium voltage indiuction motor, the windings shall be suitable varnished, baked and treated with epoxy gel for operating satisfactorily in humid and corrosive atmospheres. Winding shall be adequately braced to prevent any relative movement during operation. In this respect, special care shall be taken for the stator windings of direct-on-line starting squirrel cage motors. Insulation shall be provided between coils of different phases which lie together.

c) Core laminations must be capable of withstanding burn out for rewind at 400$^{o}$C without damage or loosening. In case of motors driving equipment with pulsating loads, special care shall be taken for the joints of rotor bars and end rings to avoid premature failure due to induced fatigue stresses. For Ex'n' and Ex'e' motors, the conductor insulation must be carried right up to the terminal clamp.

d) Windings shall be designed to withstand a coil surge voltage of 2.4 p.u. rated peak to line voltage.

e) Motors shall be designed to withstand impulse voltages specified in applicable Indian Standards. The wave shape shall be as per IS.

f) For high voltage induction motors, the windings shall be connected in star. For medium voltage induction motors, the windings shall be connected in delta. However for motors rated 2.2kW and below, star connection may be accepted. In case of motors with star-delta starting, the windings shall be fully insulated for delta connection.

5.3.2 Casing and type of enclosure

a) Motors for use in safe areas shall be industrial type meeting the specified site conditions, starting and operating requirements.

b) Motors for use in hazardous areas (Zone 1 or Zone 2) shall have type of protection Ex'd' or Ex'e' or Ex'p' or Ex'n' as specified in the data sheet.

c) Motors for outdoor use shall be suitable for installation and satisfactory operation without any protective shelter or canopy The minimum degree of protection of motors and accessories shall be IP-55.

d) All internal and external metallic parts, which may come into contact with cooling air, shall be of corrosion resistant material or appropriately treated to resist the corrosive agents which may be present in the atmosphere. Screws and bolts shall be of rust proof material or protected against corrosion.

e) Effective equipotential bonding straps to guard against the occurring of sparks due to presence of circulating currents shall be provided in Ex'n', Ex'e' and Ex'p' type motors.

f) Vertical motors with downward shaft shall be provided with suitable canopies covering the motor. Vertical motors with upward shaft e.g. on fin fan coolers shall be adequately protected (such as cowls/canopies) against ingress of water into the enclosure or the bearing housing even when standing still for long periods of time. Motors designed to handle external thrust from the driven equipment shall be supplied with a thrust bearing at the non driving end.

g) Unless otherwise specified, motors shall have standard frame sizes for various output ratings as stipulated in IS.

5.3.3 Bearing and lubrication

a) Motors shall have grease lubricated ball or roller bearings. Sleeve bearing when provided shall be of proven design.

b) In all cases, bearings shall be chosen to provide a minimum L-10 rating life for 5 years (40,000 hours) at rated operating conditions (The L-10 rating life is the number of hours at constant speed that 90% of a group of identical bearings will complete or exceed before first evidence of failure).

c) Where bearing supports are attached to the motor casing, adequate bracing shall be provided on these supports to reduce vibrations and ensure long life of the bearings. The bearings shall be adequate to absorb axial thrust provided by the motor itself or due to shaft expansion.

d) Motor bearings exposed to high temperatures (e.g. hot oil / boiler feed pump motors) shall have adequate provisions for cooling of bearings. In cases such as pumps for hot liquids where driven equipment operates at higher temperatures, bearings shall be cooled by shaft mounted fan. This shall ensure efficient ventilation of the bearing and disperse the heat transmitted from the driven equipment by conduction or convection.

e) Vertical motors shall be provided with thrust bearings suitable for the load imposed by the driven equipment.

f) Motors shall be designed to permit removing / replacement of bearings.

g) Grease lubricated bearings - Bearings shall be capable of grease injection from outside without removal of covers with motors in the running conditions. The bearing boxes shall be provided with necessary features to prevent loss of grease or entry of dust / moisture e.g. labyrinth seal. Where grease nipples are provided, these shall be associated where necessary, with appropriately located relief devices which ensure passage of grease through the bearings. The motors shall have facility for on line greasing. In case of medium voltage motors, pre-lubricated sealed bearings may be considered provided a full guarantee is given for 4 to 5 years of trouble free service without the necessity of re-lubrication

h) Sleeve bearings – Sleeve bearings shall be fitted with oiler rings for continuous lubrication. The oil reservoirs shall have a form suitable for allowing settling of any solids or residual particles contained in the oil. The covers shall be provided with suitable openings for adding and draining oil together with an overflow plug and level indication. The shaft shall have perfect seals so as to prevent entry of dust or moisture.

i) Forced lubrication bearings – The oil lubrication system shall be independent of the driven machine. Common lubrication system for the driven equipment and the motor can be accepted if it is separate from the seal oil system. The common lubrication system shall be provided with suitable degassing equipment to extract gas reducing the probability of gas entering in to the motor.

   In the independent lubrication system, oil supply shall be guaranteed by one of the following method

   - With mechanical pump co-axial with the motor and supplemented by separate electric motor driven pump for initial lubrication during start up and shut down operation.
   - With a separate electric motor driven pump. In this case the lubrication system shall consists of two identical electric motor driven pumps one running and one acting as standby.

   In addition to pumps, the lubrication system shall be supplied complete with following as minimum

   - An oil cooler of shell and tube type with tubes of inhibited admiralty brass. Internal coolers shall not be accepted. To prevent the oil from being contaminated, if the cooler fails, the oil side operating pressure shall be higher than the water side operating pressure.
   - An austenitic stainless steel oil reservoir with the following characteristics:
     - The capacity to avoid frequent filling, to provide adequate allowance for the system rundown and to provide retention time of at least 3 minutes to settle.
     - Provision to eliminate air and minimize floatation of foreign matter to the pump suction.
     - Fill connections, level indicators and breathers

- Slopped bottoms and connections for complete drainage
- Clean out openings
- A bypass line that returns below the oil level to eliminate aeration and static electricity
- Thermostat with two electrical 'NO' contacts for alarm and trip in case of high temperature.

- A supply and return system.
- A duplex full flow filter with replaceable elements and filtration of 25µm nominal or finer as recommended by bearing manufacturer. Filter cartridge material shall be corrosion resistant. Metal mesh or sintered metal filter elements shall not be acceptable. The filter shall not be equipped with relief valve or automatic bypass.
- Motor driven auxiliary pumps with suction strainer and an automatic/ manual control system arranged to start automatically on low oil pressure and manual shut down only.
- Sight flow indicators in each bearing drain line.
- Temperature gauges with thermowells in the reservoir, after the oil cooler and each bearing drain line.
- Low oil pressure alarm and shutdown switches.
- A pressure gauge (valved for removal) for each pressure level and a pressure differential indicator to measure filter pressure drop.
- Thermostatically controlled electric immersion heater with a sheath of austenitic stainless steel for heating the charge capacity of oil before start up in cold weather. The heating device shall have sufficient capacity to heat the oil in the reservoir from specified minimum ambient temperature to start up temperature as required by manufacturer within 12 hours. The watt density of heater shall not exceed 2.33 watts per sqmm.
- The oil pumps shall have steel casings unless they are enclosed in a reservoir. All other oil containing pressure components shall be steel.

A control panel shall be provided for operation & control of lubrication system. The control panel shall include fuses, electrical contactors and thermal relays for the protection and operation of motor driven pumps, push buttons, auxiliary relays and timer relays for automatic and manual operation of oil pumps.

Armoured cables suitable for high temperature duty shall be used for connections between control panel and lubrication system.

j) Induced voltage at the shaft end of the motor at no load shall not exceed 250 mV r.m.s. for roller and ball bearings and 400 mV r.m.s. for sleeve bearings. The non driving end bearing

shall be insulated from the motor frame to avoid circulating current. Manufacturer shall provide detailed drawings showing insulation arrangement.

5.3.4 Cooling system

All motors shall preferably be self-ventilated, fan cooled. Motors with higher output having manufacturer standard designs using forced ventilation cooling or closed circuit cooling employing external coolants may also be considered.

a) Self-ventilated motors – All motors shall be fan cooled. The fans shall be of corrosion resistant material and appropriately protected. For fertilizer plants, brass or bronze are not permitted materials. The material of fan for motors to be used in hazardous areas shall be antistatic and non-sparking type. Motors for installation in dusty atmospheres or in the presence of sand, fuels or other suspended solid particles in the air shall be fitted with filters for the cooling air. The filters shall be easily accessible for inspection and removable for cleaning and re-use. The material of the filters and supports trays shall be rust proof or protected against oxidation or corrosion.

b) Forced ventilated motors – Forced ventilated motors shall be equipped with two motor driven fans, each capable of supplying the full capacity of cooling air required by the motor at full load. Where air cooler design permits provision of one fan only, the second fan shall be supplied loose. Cooler design shall allow easy replacement of fan in such cases. The ventilation system shall include the flanges for the air intake and the mating flanges for the discharge ducts. An air flow indicator shall also be provided.

c) Motors with closed circuit cooling with water to air heat exchangers – The material of the heat exchangers shall be corrosion resistant (e.g. cupro nickel alloy, muntz metal, admiralty brass) and suitable for type of water used. The heat exchangers shall be designed for minimum water pressure of 5 kg / $cm^2$ and with heat losses not greater than 0.5 kg / $cm^2$. The heat exchangers shall be arranged by the sides of the motor. If possible, screens shall be provided to protect the motor windings for water leaks or leakage in the tubes. Suitable drains shall be fitted for draining water in case of leakage. The cooling system shall include trip and alarm devices. Heat exchangers for identical motors shall be interchangeable.

d) Motors with closed circuit cooling with air to air heat exchangers – The heat exchanger tubes shall be of steel or extruded aluminium. All exposed surfaces of heat exchangers and of the motors shall be safeguarded against corrosion. Joints between the heat exchanger and the main body of the motor shall be sealed by water proof gaskets. Filters shall be provided to prevent the ingress of dust and foreign particles. These shall be easily accessible for cleaning and replacement.

5.3.5 Rotor

The rotor shall be of squirrel cage type, dynamically balanced to provide a low vibration level and a long service life to the bearings. The accepted values of vibrations for a motor at rated voltage

and speed shall not exceed those given in the IS. The shaft ends shall be provided with suitably threaded hole or holes to facilitate the assembly or removal of couplings and bearing races. In case of medium voltage motors, die cast aluminium rotors for motors in hazardous areas may be accepted provided the same are type tested and approved by competent authorities.

5.3.6 Shaft extension

Motors shall be provided with a single shaft extension with key-way and full key. Motor shaft shall be sized to withstand 10 times the rated designed torque.

5.3.7 Lifting hooks

All motors shall be provided with lifting facility (i.e. hooks etc.) of adequate capacity. Lifting facility shall also be provided for heat exchangers for motors provided with heat exchangers.

**5.4 Control alarm and trip devices**

5.4.1 All electrical contacts for devices shall have current carrying capacity of minimum 5A and minimum interrupting capacity of 5A at 220V DC and 240V AC. The contacts shall be located in explosion proof or totally sealed housing according to type of motor enclosure. The cable end shall be brought together to the terminal box. Any external connections between the housing containing the relay contacts and the terminal box shall be carried out by insulated copper wires in steel conduit or by Copper conductor, PVC insulated, armoured cables with cable entries through double compression type cable glands.

5.4.2 Measurement of winding temperature – Motors with rating greater than 750kW or those provided with filters for cooling air irrespective of rating shall be provided with platinum resistance temperature measuring devices of 100 ohms resistance at $0^{o}C$ and temperature co-efficient of $3.85 \times 10^{-3}$ located in suitable positions to measure the winding temperature. A minimum of three (one per phase) detectors shall be provided between the coil sides to measure the winding temperature and three (one per phase), preferably at the base of the slots to measure core temperature each placed $120^{o}$ apart. Tube ventilated motors may not be provided with core temperature detectors. A separate terminal box shall be provided for the temperature detectors for hook up with a remote located control / monitoring unit.

5.4.3 Measurement of bearing temperature – Motors with rating greater than 750kW shall be provided with platinum resistance temperature measuring devices of 100 ohms resistance at $0^{o}C$ and temperature co-efficient of $3.85 \times 10^{-3}$ in each bearing. The connections shall be brought to separate terminal box. The terminal box for winding temperature detectors and bearing temperature detectors may be common. Additionally mercury bulb type indicating dial thermometer shall be provided for motors with sleeve type bearings for each bearing.

5.4.4 Measurement of cooling medium for heat exchangers – Motors with forced ventilation and those with air, water heat exchangers shall be provided with

- An airflow circulation indicator with electrical trip contacts that operates if the flow of cooling air is interrupted or is inadequate.
- A cooling water flow circulation indicator with electrical trip contacts that operates if the flow of cooling water is interrupted or is inadequate. The indicator shall be located on the discharge piping of the heat exchanger.

5.4.5 Pressurization control panel – All pressurized motors (Ex'p') shall be provided with a control panel for controlling the initial purging and pressurization of the motor. The pressurization control panel shall be mounted on the motor itself. The control panel shall be complete with but not limited to following items

- Timers
- Push buttons for purging and pressurization
- Solenoid valves and dampers
- Indication lamps for purging ON and purging OVER
- pressure switches and flow switches with alarm and trip contacts.

**5.5 Terminals, Terminal Boxes and Terminations**

5.5.1 The ends of the winding shall be brought out into a main terminal box. The terminations shall be by means of bushings with adequately sized bolted terminals. Line terminals shall be properly insulated from the frame with material resistant to tracking. Medium voltage induction motors shall be with six terminals and suitable links to connect them in star or in delta except for motors rated upto and including 2.2kW which may be accepted with three terminals.

5.5.2 The main terminal box shall be located on the right hand side viewed from the driving (coupling) end. Unless otherwise specified, the main terminal box shall be suitable for bottom cable entry. The size of the cable end boxes shall be large enough to provide a minimum distance of 600 mm between cable gland plate and terminal lug. For medium voltage induction motors upto 3.7kW, main terminal box located on top may be accepted. The main terminal box for medium voltage induction motors shall be rotatable in steps of $90^{o}$ to allow cable entry from either direction.

5.5.3 The neutral point of the star windings shall also be brought out to a separate terminal box and shall be located on the opposite side of main terminal box.

5.5.4 Anti-loosening, anti-vibration type of terminals shall be provided in case of increased safety (Ex'e') and non-sparking (Ex'n') motors

5.5.5 The main terminal box shall be phase segregated type, unless otherwise agreed. Motors can have elastimold phase insulated terminals in a common box. Ex'd' type and Ex'p' type motors can have phase insulated main terminal box of matching Ex'd'/Ex'p' rating.

5.5.6 The main and neutral terminal box shall be of robust construction, fabricated sheet steel and large enough to facilitate easy connection of the cables. The main and neutral terminal box shall be with necessary clearances, creepage distances between live parts and between live parts to earth considering air insulation and without any compound filling. Main and neutral terminal box cover shall be provided with handles to facilitate easy removal. However for main terminal box cover weighing less than 5kg, terminal box covers without handles can be accepted.

5.5.7 The main terminal box shall be capable of withstanding internal short circuit conditions without danger to personnel and plant from emission of hot gases or flame or due to excessive distortion or damage to the terminal enclosure. The main terminal box for high voltage induction motors shall be capable of withstanding the specified fault current for a period of 0.25 seconds.

5.5.8 Appropriate phase marking as per IS shall be provided inside the main terminal box. The marking shall be non removable and indelible.

5.5.9 An adequately sized earth terminal shall be provided in the main terminal box for termination of the fourth core of specified cable and / or cable armour termination. It is essential that all metal parts (mounting rail and cable glands) are bonded and connected to the earth system. Bonding straps are also required across joints on non-active parts

5.5.10 Separate terminal boxes shall be provided for space heaters, resistance temperature detectors, current transformers and vibration probes in case of high voltage induction motors.

5.5.11 The terminals, terminal boxes and cable entries shall be suitable for termination of specified cable sizes.

5.5.12 The main and neutral terminal boxes shall be provided with pressure relief flaps / devices for Ex'e', Ex'n' and safe area motors as per manufacturer standards.

**5.6 Miscellaneous Accessories**

5.6.1 Current transformers – If specified in the data sheet, motors shall be provided with current transformers for differential protection suitably installed in neutral terminal box. CT terminals shall be brought out to separate terminal box. CT ratio and parameters shall be provided during detail engineering stage.

5.6.2 Anti condensation heaters

a) All motors rated above 22kW shall be provided with 240 V anti-condensation heaters, sized and located so as to prevent condensation of moisture during shut down periods. The heaters shall remain 'ON' when the motor is not in service and shall not cause damage to the windings.

b) For motors installed in hazardous areas (Zone 1 or Zone 2), such heaters shall conform to the provisions of applicable IS/IEC and the temperature classification specified in the data sheet.

c) The heater leads shall be brought out to a separate terminal box of the same specification and grade of protection as the main terminal box.

d) A warning label with indelible red inscription shall be provided on the motor to indicate that the heater supply shall be isolated before carrying out any work on the motor.

**5.7 Noise level**

The permissible noise level shall not exceed the stipulations laid down in IS, unless otherwise specified in the data sheet.

**5.8 Vibrations**

Motor vibrations at the bearing housing shall be within the limits of IS unless otherwise specified for the driven equipment. Limits of shaft vibration for high voltage induction motors with sleeve bearings shall be as per IEC60034-14. Two and four pole high voltage induction motors having sleeve bearings with forced oil lubrication shall be provided with proximity probes to measure the shaft vibration adjacent and relative to bearings.

**5.9 Critical speeds**

The first actual critical speed of stiff rotors shall not be lower than 125% of the synchronous speed. For flexible rotors, this shall be between 60% and 80% of the synchronous speed. The second actual critical speed shall be above 125% of the synchronous speed.

**5.10 Earthing**

Two earth terminals preferably located on diametrically opposite side shall be provided for each motor. The size of each earth terminal shall be suitable for termination of specified earthing cable size. Necessary nuts and spring washers shall be provided for earth connection. An additional earth terminal shall be provided inside the main terminal box for earthing of armour and screen.

**5.11 Name plates**

A stainless steel name plate manufactured from series 300 stainless steel and having information as per IS shall be provided on each motor. Additional information as stipulated in applicable IS/IEC shall be included in the name plate for motors meant for used in hazardous areas.

In addition to the motor name plate, a separate motor tag number plate shall be fixed in readily visible position. The motor tag number shall be as per the data sheet.

**5.12 Painting**

Internal and external parts of the casing and all metal parts including the canopy likely to come in contact with the surrounding air shall be protected with anti acid paint that will resist the specified site conditions. All external surfaces of the motor and its canopy shall be given a coat of epoxy based paint. External paint shade shall be as specified in the data sheet.

**5.13 Hazardous area motors.**

Motor, all associated items and accessories provided shall conform to the hazardous area classification as specified in the data sheet.

### 5.14 Variable Frequency Drive (VFD) driven motors

5.14.1 The motor shall be suitable for operation with a solid state power supply consisting of an adjustable frequency inverter for speed control.

5.14.2 The motor shall be suitable for the current waveforms produced by the power supply including the harmonics generated by the VFD.

5.14.3 The motor shall be designed to operate continuously at any speed over the range (0-100%) of rated speed or as specified in the data sheet.

5.14.4 The permitted voltage variation should take into account the steady state voltage drop across the AC drive.

5.14.5 Motors required to be transferred to DOL by-pass mode if specified in the data sheet shall be rated for specified variations in line voltage and frequency.

5.14.6 The motor shall be constructed to withstand torque pulsations resulting from harmonics generated by the solid state power supply.

5.14.7 The motor insulation shall be designed to accept the applied voltage wave form, within the Vpeak and dv/dt limits as per IEC-61800-2.

5.14.8 The motor shall be fully compatible with the VFD considering given load application and the output characteristics of the VFD.

5.14.9 In case of medium voltage induction motor, induced voltage at the shaft end of the motor at no load shall not exceed 250 mV rms for roller and ball bearings and 400 mV for sleeve bearings. The non driving end bearing shall be insulated from the motor frame to avoid circulating current. The insulated bearing end shield or pedestal shall bear a prominent warning.

## 6 INSPECTION AND TESTING

6.1 During fabrication, motors shall be subject to inspection by Purchaser or by an agency authorized by the Purchaser. Vendor shall furnish all necessary information concerning the supply to Purchaser. The Purchaser shall have free access to the Vendor’s works for the purpose of inspecting the process of manufacture in all its stages and he will have the power to reject any material, which appears to him to be of unsuitable description or of unsatisfactory quality.

6.2 Motors shall be tested in accordance with applicable standards. All acceptance and routine tests as follows shall be carried out on each motor at Vendor's work under his care and expense. Vendor’s internal test reports shall be provided for Purchaser’s review prior to inspection and testing

6.2.1 Visual and dimensional check of complete motor, associated items and accessories

6.2.2 Measurement of clearances in the terminal box.

6.2.3 Verification of type of terminals (For Ex’e’ and Ex’n’ motors).

6.2.4 Verification of direction of rotation.

6.2.5 Verification of cooling system and lubrication system

6.2.6 Measurement of winding resistance

6.2.7 Insulation resistance test (before and after High Voltage test)

6.2.8 High voltage test

6.2.9 No load test and measurement of voltage, speed, current and power input.

6.2.10 Locked rotor test at reduced voltage and measurement of voltage, current and power input

6.2.11 Reduced voltage starting and running

6.2.12 Measurement of shaft voltages (for high voltage induction motors)

6.2.13 Operation of control panel (for Ex'p' motors)

6.2.14 Shaft current / bearing insulation (For VFD driven motors)

6.3 Type tests as follows shall be performed on one motor of each rating at Vendor's work or independent approved testing laboratory under his care and expense. Type test certificates approved by CPRI or equivalent approved testing agency may be acceptable in lieu of actual type tests on identical motor subject to Purchaser approval.

6.3.1 Full load test and measurement of voltage, speed, current and power input

6.3.2 Measurement of starting torque, starting current, full load torque and pull out torque

6.3.3 Measurement of efficiency and power factor at 100%, 75% and 50% rated load.

6.3.4 Temperature rise test

6.3.5 Momentary overload test

6.3.6 Tan delta test (for high voltage induction motors)

6.3.7 Measurement of vibration

6.3.8 Measurement of noise level

6.3.9 Overspeed test

6.3.10 Measurement of radial and axial clearance between fan and stationary parts (for high voltage induction motors)

6.3.11 Measurement of radial air gap (for high voltage induction motors)

6.3.12 Measurement of resistance of space heater and temperature detectors (for high voltage induction motors)

6.3.13 Polarization index test (for high voltage induction motors)

6.3.14 Measurement of surface temperature of frame and space heater (for high voltage induction motors)

6.3.15 Degree of protection

6.3.16 Short circuit test for terminal box (for high voltage induction motors)

6.3.17 Impulse test (for high voltage induction motors)

6.3.18 Hydraulic test for coolers (for high voltage induction motors)

6.3.19 Torque pulsation (For VFD driven motors)

6.2.20 Test on Ex'd' enclosures.

6.4 All motors for use in hazardous areas, shall be tested by CMRI and duly approved by PESO Nagpur or DGMS Dhanbad or any other applicable statutory authority. All Ex'd' type motors shall have valid BIS license and marking as required by statutory authorities. For VFD driven motors, motor nameplate shall clearly indicate that the motor is suitable for operation with variable frequency drive along with VFD make and model number.

6.5 Acceptance, routine and type tests shall be witnessed by Purchaser or an agency authorized by the Purchaser. Prior notice of minimum 4 weeks shall be given to the Purchaser for witnessing the tests.

## 7 PACKING AND DESPATCH

All the equipment shall be divided into several sections for protection and ease of handling during transportation. The equipment shall be properly packed for selected mode of transportation i.e. by ship/ rail or trailer. The equipment shall be wrapped in polythene sheets before being placed in crates / cases to prevent damage to finish. Crates/ cases shall have skid bottom for handling. Suitable lifting lugs etc. shall also be provided and lifting points shall be clearly marked on the package. Special notations such as 'Fragile', 'This side up', 'Center of gravity', 'weight, owner's particulars (PO nos.) etc., shall be clearly marked on the package together with other details as per purchase order.

The equipment may be stored outdoor for long periods before installation. The packing shall be completely suitable for outdoor storage in areas with heavy rains/ high ambient temperature unless otherwise agreed.

WorleyParsons
resources & energy

# VVSPL CAPACITY AUGMENTATION PROJECT

# Specification for Variable Frequency Drive

Project No: 403102-14495

Document No: 14495-00-EL-SPC-0010

08 Feb 2017

I-Think Lodha Techno Campus,
5th Floor, Tower B,
Pokhran Road No. 2
Thane (West) – 400607
Tel: +91 2266515700
Fax: +91 2267818000

© Copyright 2017 WorleyParsons

# SYNOPSIS

This document presents Specification for Variable Frequency Drive for the VVSPL Capacity Augmentation Project.

**Disclaimer**

This document has been prepared on behalf of and for the exclusive use of HPCL, and is subject to and issued in accordance with the agreement between HPCL and WorleyParsons India Pvt Ltd.

WorleyParsons India Pvt Ltd accepts no liability or responsibility whatsoever for it in respect of any use of or reliance upon this document by any third party.

Copying this document without the permission of HPCL or WorleyParsons is not permitted.

**VVSPL CAPACITY AUGMENTATION PROJECT**

| REV | DESCRIPTION | ORIG | REVIEW | WORLEY-PARSONS APPROVAL | DATE | CUSTOMER APPROVAL | DATE |
|---|---|---|---|---|---|---|---|
| A | Issued for Information | PARS | DOLV | KAMK | 08-Feb-17 | | |
| | | | | | | | |
| | | | | | | | |

# CONTENTS

1 SCOPE ..... 4
2 CODES AND STANDARDS ..... 4
3 GENERAL REQUIREMENTS ..... 5
4 SITE CONDITIONS ..... 6
5 DESIGN AND FABRICATION REQUIREMENTS ..... 6
6 COMPONENTS REQUIREMENTS ..... 13
7 PROTECTION, CONTROL, METERING AND INDICATION REQUIREMENTS ..... 16
8 INSPECTION AND TESTING ..... 21
9 PACKING AND DESPATCH ..... 23

## 1 SCOPE

This specification covers the minimum requirements for the design, material, manufacturing, inspection, testing, supply, shipment and delivery to site of Variable frequency drive for VVSPL Capacity Augmentation Project.

The Vendor shall be fully responsible for the design, material, manufacturing, inspection, testing and delivery of variable frequency drive at site.

**Definitions**

| | | |
|---|---|---|
| Purchaser | : | Hindustan Petroleum Corporation Limited |
| Engineer / Consultant | : | WorleyParsons India Pvt. Ltd. |
| Vendor / Manufacturer | : | Supplier of Variable frequency drive |

## 2 CODES AND STANDARDS

2.1 The equipment shall comply with the requirements of latest revision of following standards issued by BIS (Bureau of Indian Standards), unless otherwise specified:

| | |
|---|---|
| IS 5 | Colours for ready mixed paints and enamels |
| IS 1248 | Direct acting indicating analogue electrical measuring instruments and their accessories |
| IS 2705 | Current transformers |
| IS 2026 | Power transformers |
| IS 3700 : Part 7 | Essential ratings and characteristics of semiconductor devices - Part VII : Reverse blocking triode thyristors |
| IS 3715 : Part 4 | Letter symbols for semiconductor devices: Part 4 Thyristors |
| IS 4411 | Code for designation of semi-conductor devices |
| IS 5001 | Guide for preparation of drawings of semiconductor devices |
| IS 5469 | Code of practice for the use of semi-conductor junction devices |
| IS 6297 | Specification for transformers and inductors (Power, Audio, Pulse and Switching) for electronic equipment |
| IS 8623 | Low voltage switchgear and control gear assemblies |
| IS 9385 | High voltage fuses |
| IS 12729 | Common high voltage switchgear and controlgear standards |

| | |
|---|---|
| IS 13703 | Low voltage fuses for voltages not exceeding 1000V ac or 1500V dc |
| IS 14901 | Semiconductor devices - Discrete devices and integrated circuits |
| IS/IEC 60470 | High voltage switchgear alternating current contactor and contactor based motor starters |
| IS/IEC 60529 | Degree of protection provided by enclosures (IP code) |
| IS/IEC 60947 | Low voltage switchgear and controlgear |
| IS/IEC 62271-200 | High-voltage switchgear and controlgear – Part 200: AC metal-enclosed switchgear and controlgear for rated voltages above 1 kV and up to and including 52 kV |
| IEC 61800-4 | Adjustable Speed Electrical Power Drive Systems - Part 4: General Requirements - Rating Specifications for a.c. Power Drive Systems above 1 000 V a.c. and not Exceeding 35 kV |
| IEEE 519 | Recommended Practices and Requirements for Harmonic Control in Electrical Power System |

2.2 In case of imported equipment, standards of the country of origin shall be applicable, if these standards are equivalent or stringent than the applicable Indian standards.

2.3 The equipment shall also conform to the provisions of Indian Electricity rules and other statutory regulations currently in force in the country.

2.4 In case Indian standards are not available for any equipment, standards issued by IEC/BS/VDE/IEEE/NEMA or equivalent agency shall be applicable.

2.5 In case of any contradiction between various referred standards/specifications/data sheet and statutory regulations the following order of priority shall govern:

- Statutory regulations
- Data sheets
- This specification
- Codes and standards

However the vendor shall bring any such contradiction to the notice of Purchaser for prior approval.

## 3 GENERAL REQUIREMENTS

3.1 The offered equipment shall be brand new with state of art technology and proven field track record. No prototype equipment shall be offered.

3.2 Vendor shall ensure availability of spare parts and maintenance support services for the offered equipment for at least for 15 years from the date of supply.

3.3 Vendor shall give a notice for at least one year to the Purchaser of equipment before phasing out the product/spares to enable the end user for placement of order for spares and services.

3.4 The variable frequency drive shall be an integrated system comprising of converter, converter input transformer, drive output transformer (if required), dc link reactor with associated auxiliaries, harmonic filters (if required), input power factor correction unit (if required), isolating and earthing switches (as applicable), protection, monitoring and control devices and all other equipment/ accessories required for completeness of the system whether specifically mentioned herein or not, but necessary for completeness and satisfactory performance of the system.

3.5 The vendor shall be responsible for engineering and functioning of the complete system to fully meet the intent and requirements of this specification and enclosed data sheets. Selection, sizing and suitability of all equipment and components used for variable frequency drive shall be vendor's responsibility.

3.6 Vendor shall ensure proper co-ordination with the driven equipment Supplier in selection / sizing of variable frequency drive.

3.7 HV switchgear components wherever applicable shall comply to “Specification of High Voltage Switchboard” (Doc. No. 14495-00-EL-SPC-0001).

3.8 Oil immersed transformer wherever applicable shall comply to “Specification of Transformer” (Doc. No. 14495-00-EL-SPC-0004).

## 4 SITE CONDITIONS

4.1 The variable frequency drive shall be suitable for installation and satisfactory operation in indoor or outdoor installation as specified in the data sheet with humid and corrosive atmosphere.

4.2 The variable frequency drive shall be designed to operate under site conditions as specified in the data sheets. If not specifically mentioned therein, a design ambient temperature of 40$^{o}$C for indoor, 50$^{o}$C for outdoor and an altitude not exceeding 1000 metres above mean sea level shall be considered.

4.3 The variable frequency drive described in this specification is intended for continuous duty at the specified ratings under the specified site conditions.

## 5 DESIGN AND FABRICATION REQUIREMENTS

### 5.1 Performance requirement

5.1.1 The variable frequency drive shall be energy efficient, designed as standard product and shall provide very high reliability, high power factor, low harmonic distortion and low vibration / wear /

noise. It shall be easy to install in minimum time and expense and no special tools shall be required for routine maintenance.

5.1.2 The variable frequency drive shall be designed to deliver the motor input current and torque for the complete speed torque characteristics of the driven equipment, with input supply and frequency variation as specified in the data sheet. The system shall be suitable for the load characteristics and the operational duty of the driven equipment. It shall be capable of withstanding the thermal and dynamic stresses and the transient mechanical torque, resulting from short- circuit.

5.1.3 The variable frequency drive shall be designed to operate in one or more of the following operating modes as to suit characteristics of the driven equipment or specified in the data sheet:

a. Variable torque changing as a function of speed i.e. Speed squared

b. Constant torque over a specific speed range

c. Constant power over a specific speed range where the torque decreases when speed increases

d. Any other as specified in the data sheet

5.1.4 The variable frequency drive controller shall be equipped with microprocessor based digital regulator with programmable functions. The power control regulator logic shall provide for an acceleration/deceleration current limit curve and shall be capable of field adjustments without shutting the system down. Linear acceleration and deceleration shall be separately programmable from 0.1 to 20 seconds.

5.1.5 The variable frequency drive shall be suitable for single quadrant operation and the speed variation shall be with range 10-100 % unless otherwise specified in the data sheet with speed set accuracy of ±1% of rated maximum speed and steady state regulation of ±0.5% of rated speed without encoder or tachometer feedback.

5.1.6 For HV variable frequency drive, the total harmonic distortion (THD) of the voltage and current at VFD output shall be as per IEC 61800-4.

5.1.7 Harmonics at the supply side of the variable frequency drive at primary of the main input transformer shall be restricted within the maximum allowable levels of current and voltage distortion as per recommendations in the latest edition of IEEE-519. The vendor shall perform design calculation for harmonic filter system considering variable frequency drive connected to the power system and including the supply of harmonic filters along with all accessories which shall be installed at owner's power system unless otherwise specified. These harmonic studies shall be conducted with maximum and minimum system fault level, cable capacitance, system equipment reactance etc. The studies shall highlight but not be limited to maximum load current, expected resonant frequencies, need of harmonic filters, sequence of switching of filters, voltage wave form etc.

5.1.8 Unless otherwise specified, the overload capacity of the variable frequency drive shall be 150% of rated current of motor for one minute for constant torque applications, and 115% of rated current for one minute for variable torque applications at rated voltage. If the motor load exceeds the limit, the variable frequency drive shall automatically reduce the frequency and voltage to the motor to guard against overload. If load demands exceeds the current limit for more than 1 minute, the variable frequency drive shall shut down to prevent over heating of the motor and damage to the drive.

5.1.9 During operation, the variable frequency drive shall be capable of developing sufficient torque under all load conditions to respond to a 20% alteration in speed set point within a time limit up to 60 seconds.

5.1.10 The integrator action of the speed set point alteration shall be independently adjustable for both an upward and a downward alteration. The minimum time interval between set point adjustments by the distributed control system shall be considered as 10 seconds.

5.1.11 The variable frequency drive shall trip in case the speed exceeds 105%of the maximum operational speed or reduces to 95% of the minimum operational speed for more than 10 seconds.

5.1.12 Variable frequency drive shall be arranged so that it can be operated in an open circuit mode, disconnected from the motor for start up adjustments and troubleshooting/ maintenance.

5.1.13 For HV variable frequency drive, the voltage at motor neutral shall be maintained at ground potential for the total operating condition.

5.1.14 The variable frequency drive must be able to catch and take control of a spinning load if started while rotating equipment is already running. Appropriate safeguards must be included in this operation to prevent damaging torques, voltages or currents from impacting any of the equipments. The user shall have option of enabling this feature or disabling it.

**5.2 Control requirement**

5.2.1 The variable frequency drive shall operate on constant V/f supply with required voltage boost capability in low frequency mode of operation.

5.2.2 Short time voltage dips up to 20% of nominal voltage (e.g. in case of a large motor start up connected to the same bus as variable frequency drive) shall not cause the control system to stop functioning and shall not trip the variable frequency drive.

5.2.3 The variable frequency drive shall also be equipped with a facility which will restart the system in case of voltage dip over 20% or power interruptions for less than 2 seconds, with recovery of the voltage to its nominal value. The variable frequency drive shall have the facility to block this feature, if required by the operator. Upon restart the converter shall be capable of synchronizing onto a rotating motor and develop full acceleration torque within 10 seconds.

5.2.4 The variable frequency drive shall be suitable for number of starts as per “Specification for Induction Motors” (Doc. No. 14495-00-EL-SPC-0009).

5.2.5 The power controller shall be controlled to always start the motor in the forward direction. Logic shall be provided to prevent the motor from being started in the reverse direction.

5.2.6 The variable frequency drive motor shall be speed controlled corresponding to 4-20 mA or 0-10 V reference input signal. Unless otherwise specified, upon complete loss of the user's speed reference signal, the drive shall automatically run at constant speed as at 80-100% of the last speed reference available prior to the loss of signal.

5.2.7 It shall be possible to vary the speed of the variable frequency drive motor in either manual or auto mode. Auto/manual selection shall be from variable frequency drive panel unless otherwise specified.

a. With the selector switch in "manual" mode, the operator shall be able to start, stop and set the speed through keypad, mounted on front of the variable frequency drive or start and stop from the field (Local control station). Motor operated potentiometer shall be provided as a speed set point device.

b. With the selector switch in "auto" mode, start, stop and speed setting shall be from Unit control panel (UCP) of Package. The speed setting shall be through a 4-20 mA signal. Necessary equipment required for interfacing with UCP shall also be provided in the drive panel.

5.2.8 The required provision for the interface with remote UCP shall be either through hardwired connection (with potential free contacts and transducers as described elsewhere in this specification) or through serial communication link as defined in the data sheet. The variable frequency drive shall also communicated with PLC/DCS over Modbus RTU protocol on RS 485.

5.2.9 Variable frequency drive shall have provision for interface with upper level automation such as Substation monitoring system or electrical control system in case specified in the data sheet.

5.2.10 The closed loop control feedback for the variable frequency drive having output transformer shall be tapped from the secondary side of the output transformer.

**5.3 Construction**

5.3.1 The construction of variable frequency drive shall provide effective protection against electromagnetic emissions and shall meet the design requirement of integrated standards.

5.3.2 For HV variable frequency drives, safety Interlock shall be provided so that power cabinet can't be opened unless the upstream breaker is disconnected, safety-grounding switch is closed and DC link capacitor is discharged. Power source breaker can only be closed once the earthing switch is open and panel door is closed with lock defeat facility.

5.3.3 All components of variable frequency drive shall be suitably housed in sheet steel panels fabricated with 2 mm thick cold rolled sheet steel. The variable frequency drive panel shall be free

standing with degree of enclosure protection as specified in the data sheet. The maximum and minimum operating height shall be 1800 mm and 300 mm respectively.

5.3.4 Bolted un-drilled gland plate shall be provided at bottom. Clamp type terminals shall be used for connection of all wires up to 10 $mm^2$ and terminal for higher sizes shall be bolted type suitable for cable lugs. Minimum space for power cable termination shall be 600mm clear from bottom of the cable gland plate.

5.3.5 Bus bars shall be of electrolytic copper, color coded separately for AC and DC system. All the live parts shall be sleeved / shrouded to ensure complete safety to personnel intending to carry out routine inspection by opening the panel doors.

5.3.6 All the switches, component and accessories which are essential for normal and emergency operation shall be mounted on the door and shall be operable externally. All the analogue instruments, where provided, shall be switchboard type, back connected, 72x72mm. Scale shall have red mark indicating maximum permissible operating rating.

5.3.7 All panels shall be of same height so as to form a uniform line-up, to give good aesthetic appearance.

5.3.8 All electronic modules and components shall be accessible from front of panel only. Modular assemblies for both the system control electronic equipment and power electronic equipments shall be used.

5.3.9 For HV variable frequency drives, all low voltage compartment and cabling shall be electrically and physically separated from the high voltage compartment.

5.3.10 DC link capacitor and pre charging and discharging circuit shall be preferably mounted in the rear of the panel.

5.3.11 Suitable removable type hooks shall be provided for lifting the panel.

5.3.12 For HV variable frequency drives, perspex type transparent insulating material shall be used for covering live components.

5.3.13 Variable frequency drive keypad, operator control panel required for control, monitoring and measurements shall be supplied and installed outside the panel on the front door. It shall be accessible for operation without opening the front door and shall be non-removable type.

**5.4 Cooling**

5.4.1 The variable frequency drive panel shall be naturally cooled type. Cooling system shall include well-dimensioned panel, adequate cooling airflow path, module cooling fan and if necessary, panel cooling fan shall be considered. Vendor shall ensure that the panel dimensions and flow paths have been designed for continuous running at the specified ambient without overheating. For fan cooled drives, redundant ventilating fans (N +1) shall be provided.

5.4.2 Necessary starters shall be provided with in the variable frequency drive for the ventilation fans CW circulation pumps, any other auxiliary motor etc. The system provided shall be interfaced with variable frequency drive starting and shut down such that safety interlocks such as start permit from cooling system to variable frequency drive and trip signal from cooling system to variable frequency drive in case of cooling system failure etc., shall be incorporated in the overall sequence logic.

5.4.3 MCB for motor space heater, auxiliary power supply if required for local panel, drive panel space heater etc. shall be included and mounted in easy accessible location.

**5.5 Auxiliary wiring and terminals**

5.5.1 The wiring for control, signalling, protection and instrument circuits shall be done with BIS approved, PVC insulated, flame retardant type, copper conductor wire. The insulation grade shall be 660 V. The wiring shall preferably be enclosed in plastic channels or neatly bunched together. Wiring between HV breakers, contactors or cable compartments to relay and metering compartments shall be routed through flexible conduits.

5.5.2 A minimum of 10% spare terminals shall be provided on each terminal block. Conductors shall be terminated with adequately sized compression-type lugs for connection to equipment terminals and strips. Stranded conductors shall be soldered at the ends before connections are made to the terminals. Sufficient terminals shall be provided on each terminal block to ensure that not more than one outgoing wire is connected per terminal. Terminal strips shall preferably be separated from power circuits by metal barriers or enclosures. All spare contacts of auxiliary relays, timers, etc shall be wired up to the terminals.

5.5.3 Each wire shall be identified at both ends by correctly sized PVC ferrules. Shorting links shall be provided for all CT terminals.

5.5.4 PVC insulated copper conductor of cross section 1.5 $mm^2$ may normally be used provided the control fuse rating is 10 amps or less. For 16 amps control fuse circuit 2.5 $mm^2$ copper conductors shall be used. Each wire shall be terminated at a separate terminal. CT Circuit wiring shall be done with 2.5 $mm^2$ copper conductors. Shorting links / suitable shorting arrangement for shorting CT secondary shall be provided.

5.5.5 Unless otherwise specified, all control cables shall enter from the bottom.

5.5.6 Supporting facilities shall be provided for clamping the control cables.

5.5.7 All inter-panel control wiring within variable frequency drive shall be by vendor. The inter-panel wiring shall be taken through PVC sleeves or suitable grommets.

**5.6 Noise level**

Maximum noise level from the variable frequency drive at 1-meter distance, under rated load with all normal cooling fans operating shall not exceed 85 dBA.

**5.7 Earthing**

5.7.1 Copper earth bus of min. 50 x 6 mm size shall be provided in the panel with provision for connection to purchaser's plant earth grid. All the non-metallic components/parts shall be connected to the main earth bus bar. Separate earth bus bar and stud for electronic control system is required shall be provided.

5.7.2 All non-current carrying metallic parts of the mounted equipment shall be earthed. All doors and movable parts shall be earthed using flexible copper connections to the fixed frame of the variable frequency drive.

**5.8 Name plate**

5.8.1 A nameplate with the variable frequency drive designation shall be fixed at the top of the central panel.

5.8.2 Nameplate or polyester adhesive stickers shall be provided for each equipment mounted inside the variable frequency drive. Special warning plates shall be provided on removable covers or doors giving access to cable terminals and bus bars.

5.8.3 Engraved nameplates shall preferably be of 3-ply (Black-White Black) lamicoid sheets or anodised aluminium. However back engraved perspex sheet nameplates may also be acceptable. Nameplates shall be fastened by screws and not by adhesives.

5.8.4 Special warning labels shall be provided inside the variable frequency drive also, wherever considered necessary. Identification tags shall be provided inside the panels matching with those shown on the circuit diagram.

**5.9 Painting**

5.9.1 All metal surfaces shall be thoroughly cleaned and degreased to remove mill scale, rust, grease and dirt. Fabricated structures shall be pickled and then rinsed to remove any trace of acid. The under surface shall be prepared by applying a coat of phosphate paint and coat of yellow zinc chromate primer. The under surface shall be made free from all imperfections before undertaking the finishing coat.

5.9.2 After preparation of the under surface, the panel shall be spray painted with two coats of epoxy based final paint or shall be powder coated.

5.9.3 Colour shade of final paint shall be as specified in the data sheet.

5.9.4 The finished panels shall be dried in stoving ovens in dust free atmosphere. Panel finish shall be free from imperfections like pinholes, orange peels, runoff paint etc.

5.9.5 All unpainted steel parts shall be cadmium plated or suitably treated to prevent rust formation. If these parts are moving elements then they shall be greased.

# 6 COMPONENTS REQUIREMENTS

## 6.1 Input isolator

For HV variable frequency drives, input contactor unit is not envisaged since variable frequency drive is located in same substation building where upstream HV switchboard is located. Vendor to advice along with offer if same is required from variable frequency drive maintenance, isolation and trouble-shooting point of view.

For MV variable frequency drives, input isolator (Circuit breaker / MCCB / Switch-fuse) shall be provided as specified in the data sheet. Input isolator shall be lockable in off position and shall have minimum interrupting capacity as specified in the data sheet. Interlock shall be provided between the door, so that door cannot be opened unless the input isolator is open.

## 6.2 Input harmonic filter

If harmonic filters are required to meet the input harmonics requirement of this specification, then Vendor shall provide the filter, upstream filter isolation, protection and protection coordination as a part of variable frequency drive. The harmonic filters shall be isolated from other components such that they can be disconnected from power source and accessed for maintenance / repair while variable frequency drive is in operation. Harmonic filters must be located on primary side of the converter transformer and must be switchable with the variable frequency drive to avoid leading power factor condition when variable frequency drive is tripped. The complete filter must have independent protection for over current and ground fault. Any inductors used shall be iron or air core with maximum temperature rise of 115$^{o}$C with minimum 220$^{o}$C insulation and over temperature protection. Capacitors shall have balance / discharge resistors to equalize charge voltage and permit safe discharge on power outage

## 6.3 Converter Transformer / Output Transformer

6.3.1 The converter transformer shall be dry type or oil filled type as specified in the data sheet. In case of the dry type transformer, it shall be mounted in the variable frequency drive unless other specified in the data sheet, and the offered transformer shall be as per enclosed Specifications. The impedances of converter transformer with more than one secondary winding for 12/18/24/36 pulse systems shall be selected to ensure equal load/current sharing between the secondary windings, the converters and the motor windings under all operational conditions including starting and restarting.

6.3.2 Variable frequency drive output transformer considered only for the purpose of meeting standard rated motor voltage i.e. 3300V, 6600V shall be avoided as far as possible unless otherwise agreed between purchaser and the manufacturer.

## 6.4 Power Converter

6.4.1 The static power converter shall consist of a line side power converter for operation as a rectifier and a load side power converter for operation as a fully controlled inverter. Power converter shall be fast switching, most efficient and low loss type.

6.4.2 The rectifier shall employ full wave, bridge type, diodes to convert AC to DC. Where series connection of diodes is applicable, the manufacturer shall provide n+1 redundancy. The rectifier section shall be unaffected by phase rotation / phase sequence.

6.4.3 The inverter shall employ latest generation of IGBT power switching transistors to convert DC to 3-phase, variable frequency sinusoidal waveform using PWM technique. Where series connection of IGBTs is applicable, the manufacturer shall provide n+1 redundancy.

6.4.4 Adequate short circuit and over voltage / surge protection shall be provided for the converter and inverter system.

6.4.5 All power converter devices shall include protective devices, snubber networks and dv/dt networks as required.

6.4.6 The current rating of the converter's semi-conductor components shall not be less than 120% of the nominal current flowing through the elements at full load of the variable frequency drive through the whole speed range.

6.4.7 All power diodes shall be of silicon type with minimum VB0 rating as 2.5 times the rated operating voltage.

6.4.8 The power converter circuits shall be designed so that motor can be powered at its full nameplate rating continuously without exceeding its rated temperature rise due to harmonic currents generated by the inverter operation.

6.4.8 The conversion devices and associated heat sinks shall be assembled such that individual devices can be replaced without requiring the use of any special precautions/tools.

6.4.9 The cooling system of the electronic components, if provided, shall be monitored and necessary alarms shall be provided to prevent any consequential damage to the power control devices.

6.4.10 Offered system shall also take in account the distance between variable frequency drive panel and motor and system shall include all material and accessories to make system suitable for a distance of 350m unless otherwise specified in the data sheet

**6.5 DC Link Reactor**

6.5.1 Smoothing reactors for the DC link shall be designed to sufficiently decouple the rectifier and inverter portion of the converter and to limit fault currents in this circuit.

6.5.2 Unless otherwise specified, the reactor shall be air-cooled or fan cooled type located within the panel. In case of fan cooled type, operation of fans shall be monitored.

6.5.3 Reactor shall be suitable for operation with the non-sinusoidal current wave shapes and DC components under all operational conditions of the system without exceeding its temperature limits.

**6.6 Output Filter**

6.6.1 Variable frequency drive output current waveform should be inherently sinusoidal at all speeds, with harmonic limits as specified in this specification. Output filter shall be provided if required. Output filter capacitors shall be provided with discharge circuits to ensure that all residual stored charge is reduced to less than 50 V DC within 300 seconds after a loss of AC voltage. All capacitor shall be maintenance free and self-healing type.

6.6.2 The variable frequency drive shall inherently protect motor from high voltage dv/dt stress, independent of cable length to motor. Output filter shall be an integral part of the variable frequency drive and included within the variable frequency drive panel.

**6.7 Printed Circuit Boards**

All printed circuit boards shall be new. They shall be conformably coated for moisture and chemical resistance in addition to any dielectric coating properties.

**6.8 Output Isolator and earth switch**

For HV variable frequency drives, vendor to advice along with offer for the requirement of output contactor and earth switch in view of commissioning and trouble shooting of variable frequency drive without motor connected to variable frequency drive output.

For MV variable frequency drives, Output isolator (contactor / load break switch) shall be provided for isolation between output of the the controller and motor if specified in the data sheet. The output isolator (contactor) shall be energized before speed signal is applied to the variable frequency drive and shall be de-energized after motor stopped.

**6.8 Bypass Feature**

6.8.1 Bypass circuit breaker / contactor - fuse complete with protection, annunciation and metering shall be provided, if specified in the data sheet.

6.8.2 All variable frequency drives having bypass feature shall have motor protection relay along with necessary control and metering etc. Switching scheme shall be such that in case of drive mal-operation, the motor could be taken on bypass control manually, while the drive could be attended by opening its isolation devices.

6.8.3 Safety interlock between inverter and bypass circuit breaker / contactor – fuse shall be provided such that closing of healthy device is inhibited in case of external fault.

**6.9 Fault Diagnostic**

Fault diagnostic shall be built into the system to supervise the operation and failure of the system. The information regarding failure of any of the system including shut down of the system shall be available for a period of minimum 4 days (96 hours) after a shut down even though no supply would be available to the system. The system may be totally de- energized for maintenance or otherwise. It shall be possible to retrieve the record of events prior to tripping of the system or de-energisation. Auxiliary supply to the system components or to the electronics (firmware) for the diagnostics / display shall be taken care by the manufacturer for this purpose

### 6.10 Miscellaneous items

Each variable frequency drive panel shall be provided with illuminating lamp (11 W CFL) with switch – fuse and 5/15A, 240V power socket with switch - fuse. Each variable frequency drive panel shall have space heater with switch fuse and variable setting thermostat.

### 6.11 External Power Supply for Auxiliary and Control Circuit

6.11.1 Devices external to variable frequency drive module, space heater for motor and variable frequency drive panel, auxiliaries for transformers, cubicle CFL lamps, sockets etc. shall be suitable for auxiliary power supply as specified in the data sheet provided by purchaser.

6.11.2 Vendor shall include supply of all control transformers, protective devices, required accessories etc. and any other control supply voltage as required for the system shall be derived from the power supply made available by purchaser.

### 6.12 Reliability Features

The expected lifetime of the variable frequency drive shall be 20years. The variable frequency drive including all individual components forming part of the system shall have an availability of minimum 0.997 and a minimum MTBF of 4 years.

### 6.13 Maintenance Features

The controller design shall incorporate the following maintenance features:

- Modular construction
- All components shall be easily accessible.
- Standard diagnostics to aid maintenance personnel. These shall include LED or alphanumeric displays, test or measurement points.

## 7 PROTECTION, CONTROL, METERING AND INDICATION REQUIREMENTS

7.1 The vendor shall provide all the necessary system control, protection; alarm equipment and metering for the entire drive system and its auxiliary equipment.

7.2 Automatic sequence control shall include start-up of cooling system, auxiliary system of the motor, interlock checking, automatic start and run-up of drive, planned and emergency shutdown. The same shall be processed through microprocessor-based system.

7.3 Operator Control Panel

a. Each variable frequency drive shall be equipped with a front mounted operator control panel consisting of a backlit alphanumeric display and a keypad with keys for parameterization and adjusting parameter which shall not be limited to start/Stop, Local/Remote, auto/manual, Increase/Decrease, menu navigation and protection and measurement parameter selection, etc.

b. All parameter names, fault messages, warnings and other information shall be displayed in complete English words or standard English abbreviations to allow the user to understand what is being displayed without the use of a manual or cross-reference table. This shall also be used for the modification of all electrical values, configuration parameters, drive menu parameters, application and activity function access, faults, local control, adjustment storage, self test and diagnostics. Keypad shall be operable with password for changing the protection setting, safety interlock etc. However the parameters such as measurements, setting, mode of variable frequency drive etc. shall be allowed to be viewed without any password.

c. Operator console shall have facility / port to connect external hardware such as Lap-Top etc. Console shall have facility for upload and download of all parameter settings from one variable frequency drive to another identical variable frequency drive for start up and operation.

d. HV Variable frequency drive control shall also have facility to receive tripping signal from up stream breaker for tripping and also provision for closing up stream breaker after all required process parameters are achieved.

e. User-friendly software for operation and fault diagnostic shall be loaded in the variable frequency drive panel before commissioning.

7.4 Protective features

The variable frequency drive offered shall incorporate adequate protective features, properly coordinated for the drive control and for motor but not limited to the following:

i. Incoming line surge protection

ii. Under / Over voltage protection

iii. Phase loss, phase reversal protection.

iv. Programmable Over current protection and under load protection.

v. Motor differential protection for motor rated 1500kW and above (For HV VFDs)

vi. Inverter Fault.

vii. DC line over voltage

viii. Over frequency operation.

ix. Ventilation loss.

x. Over temperature of equipment.

xi Over speed of motor.

xii. Specific motor protection, including motor winding, bearing temperatures, over-current, overload, negative phase sequence, locked rotor and earth fault protections etc.

xiii. System Earth fault protection.

xiv. Excitation system protection for synchronous motor (For HV VFDs)

xv. Over and under frequency, rotor earth fault, field failure protection for synchronous motor (For HV VFDs)

xvi. Additional protection for drive system (For HV VFDs)

7.5 Control

The following controls shall be provided as a part of the Operator Control Panel or through separate switches.

i. Start/Stop

ii. Speed control (Raise/lower)

iii. Forward/Reverse(if specified)

iv. Auto/Manual /test mode

v. Local/remote

vi. Emergency stop

vii. Start/stop for by pass starter (where specified)

viii. Trip-Remote Breaker

ix. Excitation control system for synchronous motors (For HV VFDs)

x. Sequential switching of filters (For HV VFDs)

xi. Upstream circuit breaker On / Off (For HV VFDs)

xi. Input / output contactor On / Off (if applicable)

7.6 Indications

Vendor shall provide indications as required for normal operation and for easy maintenance, which shall not be limited to the following indications.

i. Motor running

ii. Motor stopped

iii. Variable frequency drive Fault

iv. Ready to start

v. AC mains ON

vi. Motor over speed

vii. Rectifier output 'ON'

viii. Motor zero speed

ix. Remote breaker trip

x. Excitation system healthy for synchronous motors (For HV VFDs)

xi. Upstream circuit breaker ON (For HV VFDs)

xii. Upstream circuit breaker OFF (For HV VFDs)

xiii. Upstream circuit breaker TRIP (For HV VFDs)

xiv. Input / output contactor ON (if applicable)

xv. Input / output contactor OFF (if applicable)

Above indications may be provided as a part of the operator control panel, i.e., door mounted keypad or through hardwired indicating lamps/LEDS. Potential free contacts of items i- iv shall be wired separately for remote indications in DCS system.

7.7 Metering

Digital display of the following parameters shall be as a part of the Operator Control Panel, selectable by the operator.

i. Input AC voltage

ii. Input AC frequency

iii. Input AC Current

iv. Output voltage

v. Output current VFD / Bypass

vi. Output frequency

vii. Motor thermal state

viii. Variable frequency drive thermal state

ix. Motor speed

x. Motor energy meter

xi DC Link voltage

xii. Hour Run

xiii. Voltage and current meter for excitation system for synchronous motor (For HV VFDs)

xiv. KVAR, power factor meter for synchronous motors (For HV VFDs)

Necessary transducer shall be provided with 4-20mA output for indicating motor speed and motor current in DCS unless otherwise specified for other parameters.

7.8 Audio-visual Annunciation

a. The variable frequency drive shall incorporate audio-visual annunciations for protection, for various fault conditions, for the motor, supply cables, converter transformer, DC reactor, converter, output transformer etc.

b. Alarms shall also be included for the failure of various auxiliaries together with identification of the failing unit, loss of cooling system, various protection devices provided for converter transformer etc.

c. Audio-visual window annunciations shall be provided on the front of the panel. All annunciations as required for normal and satisfactorily operation of the variable frequency drive shall be included as per vendor standards. These annunciations can be part of operator console panel or separately mounted type.

d. Vendor shall include audio-visual alarm as required for normal operation and maintenance of the variable frequency drive but not be limited to the following.

i. Rectifier fuse failure

ii. Main AC failure

iii. Inverter fuse failure

iv. Inverter overload

v. Inverter high temperature

vi. Cooling system failure

vii. Motor failed to start

viii. Transformer failure

ix. Excitation system failure for synchronous motor (For HV VFDs)

x. Communication and measurement system unhealthy (For HV VFDs)

xii. Motor temperature high (For HV VFDs)

xiii. Harmonic filters monitoring (For HV VFDs)

Common potential free contacts shall be provided for above annunciations and these shall be wired up to terminal block for owner's use for remote alarm and monitoring

## 8 INSPECTION AND TESTING

8.1 During fabrication, variable frequency drive shall be subject to inspection by Purchaser or by an agency authorized by the Purchaser. Vendor shall furnish all necessary information concerning the supply to Purchaser. The Purchaser shall have free access to the Vendor's works for the purpose of inspecting the process of manufacture in all its stages and he will have the power to reject any material, which appears to him to be of unsuitable description or of unsatisfactory quality.

8.2 Variable frequency drive shall be tested in accordance with applicable standards. All acceptance and routine tests as follows shall be carried out on each drive at Vendor's work under his care and expense. Vendor's internal test reports shall be provided for Purchaser's review prior to inspection and testing.

8.2.1 Visual and dimensional check of complete drive assembly and all components

8.2.2 Operational check of all drive components under normal and worst voltage conditions.

8.2.3 Verification of Bill of material

8.2.4 Insulation test.

8.2.5 Light load and functional test.

8.2.6 Load characteristics test (For HV VFDs)

8.2.7 Load duty test (For HV VFDs)

8.2.8 Verification of auxiliary and control devices

8.2.9 Verification of properties of control equipment

8.2.10 Verification of protective devices

8.2.11 Verification of control and functional requirements

8.2.12 High voltage test (For HV VFDs)

8.2.13 Leakage and pressure test for cooling water system where provided

8.2.14 Automatic re-start / re-acceleration

8.3 Type tests as follows shall be performed on one drive of each rating at Vendor's work or independent approved testing laboratory under his care and expense. Type test certificates approved by CPRI or equivalent approved testing agency may be acceptable in lieu of actual type tests on identical HV variable frequency drive subject to Purchaser approval.

8.3.1 Allowable full load current versus speed

8.3.2 Efficiency

8.3.3 Temperature Rise Test

8.3.4 EM immunity

8.3.5 EM emmission

8.3.6 Current sharing (For HV VFDs)

8.3.7 Voltage division (For HV VFDs)

8.3.8 Line side current distortion content (For HV VFDs)

8.3.9 Overcurrent capability (For MV VFDs)

8.3.10 Measurement of ripple voltage and current (For MV VFDs)

8.3.11 Inherent voltage regulation (For MV VFDs)

8.3.12 Power factor

8.3.13 Audible noise

8.3.14 Dynamic performance (For HV VFDs)

8.3.12 Current limit and current loop test (For HV VFDs)

8.3.13 Speed loop test capability to ride through voltage less than 80% of rated voltage

8.3.14 Test capability to restart the system and resynchronize converter onto running motor after a voltage interruption

8.3.15 Degree of protection

8.4 Additional tests on switchgears and transformers shall be carried out based on the requirement defined in specification of respective equipment.

8.5 String Test with driven equipment

If a string test with driven equipment is specified in the data sheet of the driven equipment, it shall be carried out with the job equipment.

8.6 The HV variable frequency drive and associated motor equipment shall have test certificates issued by recognized independent test house (CMRI/ BASEEFA/ LCIE/UL/FM or equivalent).

Motors and variable frequency drive system for hazardous area application as well as safe area shall be type tested as unit.

8.7 Acceptance, routine and type tests shall be witnessed by Purchaser or an agency authorized by the Purchaser. Prior notice of minimum 4 weeks shall be given to the Purchaser for witnessing the tests.

8.8 For equipment bought from other sub-suppliers, certified test reports of tests carried out at the sub-supplier's works shall be submitted. Normally all routine tests as specified in the relevant standards shall be conducted by the sub-supplier at his works.

## 9 PACKING AND DESPATCH

All the equipment shall be divided into several sections for protection and ease of handling during transportation. The equipment shall be properly packed for selected mode of transportation i.e. by ship/ rail or trailer. The equipment shall be wrapped in polythene sheets before being placed in crates / cases to prevent damage to finish. Crates/ cases shall have skid bottom for handling. Suitable lifting lugs etc. shall also be provided and lifting points shall be clearly marked on the package. Special notations such as 'Fragile', 'This side up', 'Center of gravity', 'weight, owner's particulars (PO nos.) etc., shall be clearly marked on the package together with other details as per purchase order.

The equipment may be stored outdoor for long periods before installation. The packing shall be completely suitable for outdoor storage in areas with heavy rains/ high ambient temperature unless otherwise agreed.

# Appendix 3 EXPERIENCE RECORD PROFORMA MOTORS VFD'S

The drawing, design and details given on this format are the property of WorleyParsons Engineering Pvt. Ltd. They are merely loaned on the borrower's express agreement that they will not be reproduced, copied, exhibited or used, except in the limited way permitted by a written consent given by the tender to the borrower for the intended use.

EXPERIENCE RECORD – MOTOR / VFDs

ITEM : HORIZONTAL CENTRIFUGAL PUMPS (MAINLINE PUMPS)

ITEM NUMBER :

VENDOR :

INSTRUCTIONS TO VENDORS :

1. This proforma duly filled in shall be submitted for each item separately, alongwith the bid.

2. Since the information requested in this proforma will be utilized to assess provenness of offered model, it is in the interest of the equipment manufacturer to pick up those cases out of total list of references which most closely match with the offered mode. The equipment manufacturer shall also ensure that each & every information asked for is furnished and the same is correct and complete in all respects.

   **Incorrect information furnished in this proforma shall render the bid liable for rejection.**

3. While furnishing the materials, where asked for, the equipment manufacturer shall furnish ASTM equivalents also.

4. For the referred installations, the equipment manufacturer shall indicate the name of the person (alongwith his address, telephone no., fax no. / email-id etc.) who may be contacted by the Purchaser/ his representative, if felt necessary.

5. The equipment manufacturer shall also furnish along with the bid his standard reference list for the offered equipment model manufactured and supplied by him.

6. For pumps with VFD drives, Vendors are cautioned to cite only those pump references where VFDs have been used.

7. The equipment manufacturer shall clarify the meaning of each letter/ digit used in the model designation below :

The drawing, design and details given on this format are the property of WorleyParsons Engineering Pvt. Ltd. They are merely loaned on the borrower's express agreement that they will not be reproduced, copied, exhibited or used, except in the limited way permitted by a written consent given by the tender to the borrower for the intended use.

**Description of Model designation system :**

| SL. NO. | PARAMETER | INFORMATION ON PROPOSED MODEL | INFORMATION ON REFERRED EXISTING INSTALLATIONS | | | REMARKS |
|---|---|---|---|---|---|---|
| | | | Ref – 1 | Ref – 2 | Ref – 3 | |
| 1 | 2 | 3 | 4 | 5 | 6 | 7 |
| | **For Electric Motors** | | | | | |
| 1 | **GENERAL (For design, manufacture, testing and supply of motor)** | | | | | |
| 1.1 | Cross reference to manufacturer's Standard Reference list | | | | | |
| 1.2 | Make | | | | | |
| 1.3 | Model Number | | | | | |
| 1.4 | Enclosure Type (Whether Type-n/ Type Ex(e)/ Type Ex(d)) | | | | | |
| 1.5 | Rated Kw of motors / No. of poles | | | | | |
| 1.6 | Rated voltage of motor | | | | | |

The drawing, design and details given on this format are the property of WorleyParsons Engineering Pvt. Ltd. They are merely loaned on the borrower's express agreement that they will not be reproduced, copied, exhibited or used, except in the limited way permitted by a written consent given by the tender to the borrower for the intended use.

| SL. NO. | PARAMETER | INFORMATION ON PROPOSED MODEL | INFORMATION ON REFERRED EXISTING INSTALLATIONS | | | REMARKS |
|---|---|---|---|---|---|---|
| | | | Ref – 1 | Ref – 2 | Ref – 3 | |
| 1 | 2 | 3 | 4 | 5 | 6 | 7 |
| 1.7 | Whether Fixed speed/ Variable Frequency drive | | | | | |
| 1.8 | Speed variation range (through VFDs) | | | | | |
| 1.9 | Model/ Type of driving/ non drive end bearings | | | | | |
| 1.10 | Shop where motor is designed, manufactured, packaged, tested & supplied with address | | | | | |
| 2 | **OTHER INFORMATION ON INSTALLATIONS** | | | | | |
| 2.1 | Date of supply | | | | | |
| 2.2 | Date of commissioning | | | | | |
| 2.3 | No. of operating hours completed as on the date of issue of material requisition | | | | | |
| 2.4 | Major problems encountered | | | | | |
| 2.5 | Purchaser's Name and Address | | | | | |

The drawing, design and details given on this format are the property of WorleyParsons Engineering Pvt. Ltd. They are merely loaned on the borrower's express agreement that they will not be reproduced, copied, exhibited or used, except in the limited way permitted by a written consent given by the tender to the borrower for the intended use.

| SL. NO. | PARAMETER | INFORMATION ON PROPOSED MODEL | INFORMATION ON REFERRED EXISTING INSTALLATIONS | | | REMARKS |
|---|---|---|---|---|---|---|
| | | | Ref – 1 | Ref – 2 | Ref – 3 | |
| 1 | 2 | 3 | 4 | 5 | 6 | 7 |
| | Name (Company / Organization ) | | | | | |
| | Name of Contract Person | | | | | |
| | Address | | | | | |
| | Telephone No. | | | | | |
| | Fax No. | | | | | |
| | Email-id | | | | | |

The drawing, design and details given on this format are the property of WorleyParsons Engineering Pvt. Ltd. They are merely loaned on the borrower's express agreement that they will not be reproduced, copied, exhibited or used, except in the limited way permitted by a written consent given by the tender to the borrower for the intended use.

| SL. NO. | PARAMETER | INFORMATION ON PROPOSED MODEL | INFORMATION ON REFERRED EXISTING INSTALLATIONS | | | REMARKS |
|---|---|---|---|---|---|---|
| | | | Ref – 1 | Ref – 2 | Ref – 3 | |
| 1 | 2 | 3 | 4 | 5 | 6 | 7 |
| | **For Variable Frequency Drive Panel** | | | | | |
| 1 | **GENERAL (For design, manufacture, testing and supply of Variable Frequency Drive (VFD) panels)** | | | | | |
| 1.1 | Cross reference to manufacturer's Standard Reference list | | | | | |
| 1.2 | Make | | | | | |
| 1.3 | Model Number | | | | | |
| 1.4 | Power rating | | | | | |
| 1.5 | Voltage rating | | | | | |
| 1.6 | Speed variation range | | | | | |
| 1.7 | Shop where variable frequency drive panel is designed, manufactured, packaged, tested & supplied with address | | | | | |

The drawing, design and details given on this format are the property of WorleyParsons Engineering Pvt. Ltd. They are merely loaned on the borrower's express agreement that they will not be reproduced, copied, exhibited or used, except in the limited way permitted by a written consent given by the tender to the borrower for the intended use.

| SL. NO. | PARAMETER | INFORMATION ON PROPOSED MODEL | INFORMATION ON REFERRED EXISTING INSTALLATIONS | | | REMARKS |
|---|---|---|---|---|---|---|
| | | | Ref – 1 | Ref – 2 | Ref – 3 | |
| 1 | 2 | 3 | 4 | 5 | 6 | 7 |
| 1.8 | Experience record for carrying out harmonic analysis (for both harmonic currents & voltages) and calculations of harmonics injected into the AC system | | | | | |
| 1.9 | Experience record for design, engineering and supply of requisite harmonic filters to reduce harmonics within limits recommended in IEC | | | | | |
| 2 | **OTHER INFORMATION ON INSTALLATIONS** | | | | | |
| 2.1 | Date of supply | | | | | |
| 2.2 | Date of commissioning | | | | | |
| 2.3 | No. of operating hours completed as on the date of issue of material requisition | | | | | |
| 2.4 | Major problems encountered | | | | | |
| 2.5 | Purchaser's Name and Address | | | | | |
| | Name (Company / Organization ) | | | | | |

The drawing, design and details given on this format are the property of WorleyParsons Engineering Pvt. Ltd. They are merely loaned on the borrower's express agreement that they will not be reproduced, copied, exhibited or used, except in the limited way permitted by a written consent given by the tender to the borrower for the intended use.

| SL. NO. | PARAMETER | INFORMATION ON PROPOSED MODEL | INFORMATION ON REFERRED EXISTING INSTALLATIONS | | | REMARKS |
|---|---|---|---|---|---|---|
| | | | Ref – 1 | Ref – 2 | Ref – 3 | |
| 1 | 2 | 3 | 4 | 5 | 6 | 7 |
| | Name of Contract Person | | | | | |
| | Address | | | | | |
| | Telephone No. | | | | | |
| | Fax No. | | | | | |
| | Email-id | | | | | |

# Appendix 4 CHECK LIST FOR COMPLETION OF BID

## APPENDIX 4

## CHECK LIST : COMPLETENESS OF BID

Vendor shall confirm that the following documents/ confirmations/ information is enclosed with the bid. In case bids are found incomplete the same can be summarily disqualified for further evaluation. It is in the Vendor's own interest to see that the bids are prepared and submitted in accordance with specified requirements. In case reply is "NO" the Vendor shall furnish reasons for the same.

| Sr. No. | Description | Enclosed : YES/ NO | Remarks |
|---|---|---|---|
| 1 | All Check Lists (i.e. this check list, check list for scope of supply, check list for mandatory spares) fully completed | | |
| 2 | Deviation lists for the following : | | |
| 2.1 | Job Specifications | | |
| 2.2 | Data Sheets | | |
| 2.3 | Inspection and tests as specified | | |
| 2.4 | Vendor Data Requirements | | |
| 2.5 | API Standards | | |
| 2.6 | Confirm that completed filled data sheets for all pump items for which the bid has been made is submitted including elect. Motors, VFDs etc. | | |
| 3 | Confirm that The pump performance curves for all pump items are furnished at 200 rpm increments between the minimum and maximum speeds selected by the Vendor | | |
| | Confirm that pump performance curves for parallel pump operation with existing pump provided (applicable for existing pump stations) | | |
| 4 | Confirm that minimum stable continuous flow of the pump has been indicated corresponding to all the operating speed and also for minimum operatable speed for each pump item. | | |

**APPENDIX 4 - CHECKLIST FOR COMPLETENESS OF THE BID**

| Sr. No. | Description | Enclosed : YES/ NO | Remarks |
|---|---|---|---|
| 5 | Confirm that for VFD operated pumps, all the operating points have been duly marked on the performance curve envelope covering all the proposed operating speeds. | | |
| 6 | Confirm the suitability of the main line pumps and the complete drive system to be started or stopped without necessitating any by pass. Vendor shall critically evaluate this aspect and confirm suitability for the same | | |
| 7 | Confirmation that total scope of supply/ work is in accordance with the bid document or else list items excluded from the specified scope of supply/ work | | |
| 8 | Confirm that filled in experience record proforma for each item of the pump and Motor/ VFD has been submitted. | | |
| 9 | Confirm that available space in the existing pump house at Existing Pump House at Vizag, Rajahmundry, Vijaywada and Suryapet is adequate for the installation of complete pump package ( i.e. Pump+ motor+ lube oil skid (if required)) along with the tolerances and space required for the suction and discharge piping. | | |
| 10 | Confirm that available space in the existing substations at Existing pumping stations at Vizag, Rajahmundry, Vijaywada and Suryapet is adequate for the installation of new VFD alongwith recommended (By VFD Vendor) clearances. | | |

**APPENDIX 4 - CHECKLIST FOR COMPLETENESS OF THE BID**

| Sr. No. | Description | Enclosed : YES/ NO | Remarks |
|---|---|---|---|
| 11 | Confirm that available space in the existing Control Rooms at Existing pumping stations at Vizag, Rajahmundry, Vijaywada and Suryapet is adequate for the installation of new UCP alongwith recommended (By UCP Vendor) clearances. | | |
| 12 | Vendor's general reference list included | | |
| 13 | Manufacturers catalogues (Original) for the offered items | | |
| 14 | P&IDs/ Schematic Drawings for offered systems (for information only) | | |
| 15 | General Arrangement and cross sectional drawings of the main equipment | | |
| 16 | Equipment Layout Drawing | | |
| 17 | Utility Requirements | | |
| 18 | Skid size and weights | | |
| 19 | Skid size (L X W X H, mm) | | |
| 20 | Maximum Weights<br>- Erection<br>- Maintenance | | |
| 21 | Recommended Crane Capacity and the hook height from the floor level | | |
| 22 | Spare Parts / Special Tools | | |
| 22.1 | Mandatory Spares | | |
| 22.2 | Quotation for Spare parts for 2 years of normal operation as recommended by the Vendor over and above the mandatory spares | | |
| 22.3 | List of Erection & Commissioning Spares | | |
| 22.4 | List of Special Tools & Tackles | | |

**APPENDIX 4 - CHECKLIST FOR COMPLETENESS OF THE BID**

| Sr. No. | Description | Enclosed : YES/ NO | Remarks |
|---|---|---|---|
| 23 | Quotation for Supervision of Precommissioning and commissioning of the packages as listed in the relevant specifications attached with the MR | | |
| 24 | Quotation for Annual maintenance charges for three consecutive terms (each term of 2 years) starting from just after the expiry of warranty for each item. Also confirm the price validity of these charges after 3 months of expiry of warranty. | | |

# Appendix 5 CHECK LIST FOR SCOPE OF SUPPLY OF PUMP

## APPENDIX 5

## CHECK LIST: SCOPE OF SUPPLY CENTRIFUGAL PUMP

(i) Vendor shall furnish all equipment, drivers, VFD Systems as applicable, auxiliary systems, instruments and controls and safety devices as per the enquiry document. Extra hardware required over and above what is specified, for safe and satisfactory operation of the equipment package shall be included by the vendor in his scope.

(ii) Vendor to write YES/ NO against each item. Vendor is required to include complete scope, as such 'NO' is not warranted. However, in case for any of the items if vendor's reply is 'NO', vendor should give reasons for the same.

**(iii) Vendor shall submit the Tag wise filled Check list for Mainline Pump for each location**

(iv) Vendor's scope of supply shall include but not be limited to the following:

Pump Tag No. _____

| Sr. No. | Description | Specified by Purchaser (Yes / No) | Included by Vendor (Yes / No) | Remarks |
|---|---|---|---|---|
| 1 | **Pump**<br>(Refer equipment data sheets and other specs. for full details) | | | |
| 1.1 | Centrifugal Pumps complete with coupling, lube oil (If required), Sealing system & ARV. | Yes | | |
| 1.1.1 | Lube Oil System – If Required ( Specify Yes or No) | | | |
| 1.2 | Couplings (non-lubricated type), spacers and no-spark guards | Yes | | |
| 2 | **Electrical Equipment**<br>(Refer also electrical data sheet and related specs. for full details) | | | |
| 2.1 | Electric Motor driver with VFDs for all pump items. | Yes | | |
| 2.2 | VFD for existing motor at Vijayawada (**Applicable for Vijaywada Location only**) | Yes | | |

**APPENDIX 5** - CHECKLIST FOR SCOPE OF SUPPLY – CENTRIFUGAL PUMP

| Sr. No. | Description | Specified by Purchaser (Yes / No) | Included by Vendor (Yes / No) | Remarks |
|---|---|---|---|---|
| 2.3 | All electrical equipment including electric motors (MV/LV Motors) for auxiliary equipment and electric heaters etc. | Yes | | |
| 2.4 | Local Start / Stop station near the main motor & Lube oil skid motors | Yes | | |
| 2.5 | Motor attachments/ fixing bolts, base plates, anchor bolts, shims etc | Yes | | |
| 2.6 | Earthing system for package equipment | Yes | | |
| 2.7 | Special Cables, if any | Yes | | |
| 2.8 | All other items as per electrical data sheet & specs. | Yes | | |
| 3 | **Instrumentation and Controls**<br>**(Applicable for Main line pumps only)**<br>(Refer also Eqpt, and Instrumentation data sheets, related specifications & P&ID's for full details) | | | |
| 3.1 | Unit control Panel (As per the Specification) | Yes | | |
| 3.2 | Machine Monitoring System, Vibration Monitoring System | Yes | | |
| 3.3 | Field instruments as specified | Yes | | |
| 3.4 | Safety Interlocks | Yes | | |
| 3.5 | Complete interconnecting cabling between Instruments & skid JB including local start / stop panel. | Yes | | |
| 4 | Common Lube oil system ( If Required) as per API 614 for pump and driver as applicable complete with:<br>(Specify Yes or No , based on requirement) | Yes | | |
| | (a) L.O. reservoir | Yes | | |
| | (b) Individual motor driven Main/ Auxiliary L.O. pumps | Yes | | |
| | (c) Duplex type L.O. filter | Yes | | |
| | (d) Finned tube type (Air Cooled) L.O. Cooler | Yes | | |

**APPENDIX 5** - CHECKLIST FOR SCOPE OF SUPPLY – CENTRIFUGAL PUMP

| Sr. No. | Description | Specified by Purchaser (Yes / No) | Included by Vendor (Yes / No) | Remarks |
|---|---|---|---|---|
| | (e) Pressure control valve (for maintaining constant pressure in L.O. Header) | Yes | | |
| | (f) Other Instrumentation & Controls as specified / required | Yes | | |
| | (g) Lube oil piping | Yes | | |
| 5 | **Spares & Tools / Tackles** | | | |
| 5.1 | Spares for the complete pump package including Mechanical, Electrical, Instrumentation etc. | | | |
| | - Mandatory spares as specified in the MR | Yes | | |
| | - Commissioning spares as recommended by the equipment manufacturer | Yes | | |
| | - Quote for vendor recommended spares for 2 year normal operation over and above mandatory spares | Yes | | |
| 5.2 | Special tools and tackles required for erection, site assembly and maintenance of each pump package as recommended by the equipment manufacturer. Refer to Specification for Mainline pumps attached with MR, also. | Yes | | |
| 6 | **Inspection and Testing** | | | |
| 6.1 | Witness Hyrdrostatic Test | Yes | | |
| 6.2 | Witness Performance Test | Yes | | |
| 6.3 | Witness NPSH test (if required per specification) | Yes | | |
| 6.4 | Witness complete unit test (With job driver & job auxiliaries like lube system etc.) | Yes | | |
| 6.5 | Witness dismantle & reassembly test | Yes | | |
| 6.6 | Mechanical run test<br>a) 4 Hr. Mech Run test<br>b) 2 Hr at Min. Continuous Flow | Yes | | |
| 6.7 | Testing of motor & VFD as per the requirements of Electrical specifications attached with MR | Yes | | |

**APPENDIX 5** - CHECKLIST FOR SCOPE OF SUPPLY – CENTRIFUGAL PUMP

| Sr. No. | Description | Specified by Purchaser (Yes / No) | Included by Vendor (Yes / No) | Remarks |
|---|---|---|---|---|
| 6.8 | Testing of Instruments Items (i.e. UCP etc.) as per the requirement of Instrumentation specification attached with MR. | Yes | | |
| 7 | **Vendor Data & Drawings** | | | |
| 7.1 | All data & drawings as required as per Vendor data requirements, data sheets, specifications and referenced codes and standards | Yes | | |
| 8 | **Erection & Commissioning** | | | |
| 8.1 | Supervision of Precommissioning & Commissioning for pump package (as per specifications attached with the MR) | Yes | | |
| 9 | **Miscellaneous** | | | |
| 9.1 | Foundation bolts, Hold down bolts, shims, Levelling bolts etc. | Yes | | |
| 9.2 | Companion Flanges : All purchaser's interface nozzles including Suction, Discharge, Drain and Vent flanges. | Yes | | |
| 9.3 | All inter connecting piping within the package skids | Yes | | |
| 9.4 | Torsional Analysis report | Yes | | |
| 9.5 | Lateral Analysis Report | Yes | | |
| 9.6 | Training for operating personnel | Yes | | |
| 10 | Additional items (including mechanical, electrical and instrumentation and controls) not specified by Purchaser but recommended by Vendor for safe, smooth and efficient operation of Complete Pump Unit (Vendor to include separate list of such items in his proposal along with their unit prices) | Yes | | |
| 11 | Any statutory approval (like PESO/ CPRI etc.) for combined testing of VFD and motor for all tags | Yes | | |

# Appendix 6 EXPERIENCE RECORD PROFORMA PACKAGING

The drawing, design and details given on this format are the property of WorleyParsons Engineering Pvt. Ltd. They are merely loaned on the borrower's express agreement that they will not be reproduced, copied, exhibited or used, except in the limited way permitted by a written consent given by the tender to the borrower for the intended use.

**Vendor/ Manufacturer's Experience Record for Fabrication/ Packaging/ Testing of Pump/ Motor/ VFD (as applicable) Package**

ITEM : HORIZONTAL CENTRIFUGAL PUMP (MAINLINE PUMPS)

ITEM NUMBER :

VENDOR :

(Vendor to clarify the meaning of each letter / digit in the model designation)

| SL. NO. | PARAMETER | INFORMATION ON PROPOSED MODEL | INFORMATION ON REFERRED EXISTING INSTALLATIONS | | | REMARKS |
|---|---|---|---|---|---|---|
| | | | Ref – 1 | Ref – 2 | Ref – 3 | |
| 1 | 2 | 3 | 4 | 5 | 6 | 7 |
| 1 | Size (LxWxH) : Main skid (Pump/ Gear/ Motor) | | | | | |
| 2 | Weight of main skid | | | | | |
| 3 | No. of support points | | | | | |
| 4 | Pump Data | | | | | |

The drawing, design and details given on this format are the property of WorleyParsons Engineering Pvt. Ltd. They are merely loaned on the borrower's express agreement that they will not be reproduced, copied, exhibited or used, except in the limited way permitted by a written consent given by the tender to the borrower for the intended use.

| SL. NO. | PARAMETER | INFORMATION ON PROPOSED MODEL | INFORMATION ON REFERRED EXISTING INSTALLATIONS | | | REMARKS |
|---|---|---|---|---|---|---|
| | | | Ref – 1 | Ref – 2 | Ref – 3 | |
| 4.1 | Make/ Model | | | | | |
| 4.2 | Rated Capacity (m3/hr.) | | | | | |
| 4.3 | Suction/ Discharge Pressure (kg/cm2G) | | | | | |
| 4.4 | Differential Head (m) | | | | | |
| 4.5 | Speed (RPM) / Ratted BKW | | | | | |
| 5 | Driver Data | | | | | |
| 5.1 | Type of driver | | | | | |
| 5.2 | Make/ Model | | | | | |
| 5.3 | Driver Rating (kW)/ Speed (RPM) | | | | | |
| 6 | VFD Data | | | | | |

The drawing, design and details given on this format are the property of WorleyParsons Engineering Pvt. Ltd. They are merely loaned on the borrower's express agreement that they will not be reproduced, copied, exhibited or used, except in the limited way permitted by a written consent given by the tender to the borrower for the intended use.

| SL. NO. | PARAMETER | INFORMATION ON PROPOSED MODEL | INFORMATION ON REFERRED EXISTING INSTALLATIONS | | | REMARKS |
|---|---|---|---|---|---|---|
| | | | Ref – 1 | Ref – 2 | Ref – 3 | |
| 6.1 | Type of VFD | | | | | |
| 6.2 | Make/ Model | | | | | |
| 6.3 | Driver Rating (kW)/ Speed Range (RPM) | | | | | |
| 7 | Control Panel | | | | | |
| 8 | Lube Oil System included (Yes/ No) | | | | | |
| 9 | Engineering for the package done by | | | | | |
| 10 | Project Management by | | | | | |
| 11 | Shop where entire unit is packaged & Tested as per purchaser's requirements with complete address/ fax & telephone no. and name of the contact person | | | | | |
| 12 | Data of supply & commissioning of unit | | | | | |
| 13 | No. of operating hours completed at specified operating conditions as on bid due date. | | | | | |

The drawing, design and details given on this format are the property of WorleyParsons Engineering Pvt. Ltd. They are merely loaned on the borrower's express agreement that they will not be reproduced, copied, exhibited or used, except in the limited way permitted by a written consent given by the tender to the borrower for the intended use.

| SL. NO. | PARAMETER | INFORMATION ON PROPOSED MODEL | INFORMATION ON REFERRED EXISTING INSTALLATIONS | | | REMARKS |
|---|---|---|---|---|---|---|
| | | | Ref – 1 | Ref – 2 | Ref – 3 | |
| 14 | Name of purchaser with complete address/ fax no./ telephone no. and name of the contact person of the purchaser | | | | | |
| 15 | Location of operating site (complete address/ fax no./ telephone no. and name of contact person) | | | | | |
| 16 | Major problems encountered if any. | | | | | |

# Appendix 7 GENERAL PAST REFERENCES OF PUMPS SUPPLIED WITH VFD'S

| 1 | 2 | 3 | 4 | 5 | 6 | 7 | 8 | 9 | 10 | 11 | 12 | 12 | 14 |
|---|---|---|---|---|---|---|---|---|---|---|---|---|---|
| **Sl. No.** | **Model** | **No. of stages** | **User's Complete Name and Address** | **Liquid Handled** | **Rated Capacity M3/Hr** | **Rated Head of Pump, Metres** | **Rated Speed RPM** | **Range of Speed, RPM** | **Method of Speed Control** | **Driver Type, Rating (kw) & Synchr, Speed** | **Year of supply** | **Total hours togged** | **Remarks** |
| | | | | | | | | | | | | | |
| | | | | | | | | | | | | | |
| | | | | | | | | | | | | | |
| | | | | | | | | | | | | | |
| | | | | | | | | | | | | | |
| | | | | | | | | | | | | | |
| | | | | | | | | | | | | | |
| | | | | | | | | | | | | | |
| | | | | | | | | | | | | | |
| | | | | | | | | | | | | | |

# Appendix 8 EXPERIENCE RECORD PROFORMA PUMPS

The drawing, design and details given on this format are the property of WorleyParsons Engineering Pvt. Ltd. They are merely loaned on the borrower's express agreement that they will not be reproduced, copied, exhibited or used, except in the limited way permitted by a written consent given by the tender to the borrower for the intended use.

**EXPERIENCE RECORD – CENTRIFUGAL PUMP (HORIZONTAL MULTISTAGE)**

ITEM : HORIZONTAL CENTRFIFUGAL PUMPS (MAIN LINE PUMPS)

ITEM NUMBER :

VENDOR :

INSTRUCTIONS TO BIDDERS :

1. This proforma duly filled in shall be submitted for each item separately, alongwith the bid.

2. Since the information requested in this proforma will be utilized to assess provenness of offered model, it is in the interest of the equipment manufacturer to pick up those cases out of total list of references which most closely match with the offered mode. The equipment manufacturer shall also ensure that each & every information asked for is furnished and the same is correct and complete in all respects.

   **Incorrect information furnished in this proforma shall render the bid liable for rejection.**

3. While furnishing the materials, where asked for, the equipment manufacturer shall furnish ASTM equivalents also.

4. For the referred installations, the equipment manufacturer shall indicate the name of the person (alongwith his address, telephone no., fax no. / email-id etc.) who may be contacted by the Purchaser/ his representative, if felt necessary.

5. The equipment manufacturer shall also furnish along with the bid his standard reference list for the offered equipment model manufactured and supplied by him.

6. For pumps with VFD drives, Bidders are cautioned to cite only those pump references where VFDs have been used.

7. The equipment manufacturer shall clarify the meaning of each letter/ digit used in the model designation below :

The drawing, design and details given on this format are the property of WorleyParsons Engineering Pvt. Ltd. They are merely loaned on the borrower's express agreement that they will not be reproduced, copied, exhibited or used, except in the limited way permitted by a written consent given by the tender to the borrower for the intended use.

**Description of Model designation system:**

| SL. NO. | PARAMETER | INFORMATION ON PROPOSED MODEL | INFORMATION ON REFERRED EXISTING INSTALLATIONS | | | REMARKS |
|---|---|---|---|---|---|---|
| | | | Ref – 1 | Ref – 2 | Ref – 3 | |
| 1 | 2 | 3 | 4 | 5 | 6 | 7 |
| 1 | **GENERAL** | | | | | |
| 1.1 | Cross reference to manufacturer's Standard Reference list | | | | | |
| 1.2 | Make | | | | | |
| 1.3 | Model Number | | | | | |
| 1.4 | Number of units supplied | | | | | |
| 1.5 | Type of driver<br>(Electric Motor / Steam Turbine / Gas Turbine / IC Engine) | | | | | |
| 1.6 | Driver rated kW / Speed (rpm) | | | | | |

The drawing, design and details given on this format are the property of WorleyParsons Engineering Pvt. Ltd. They are merely loaned on the borrower's express agreement that they will not be reproduced, copied, exhibited or used, except in the limited way permitted by a written consent given by the tender to the borrower for the intended use.

| SL. NO. | PARAMETER | INFORMATION ON PROPOSED MODEL | INFORMATION ON REFERRED EXISTING INSTALLATIONS | | | REMARKS |
|---|---|---|---|---|---|---|
| | | | Ref – 1 | Ref – 2 | Ref – 3 | |
| 1.7 | Edition of API Std – 610 to which the pump conforms (10th edition& 11th edition ) | | | | | |
| 1.8 | Drive<br>(Fixed Speed / Variable Frequency) | | | | | |
| 1.9 | Shop where pump is designed, manufactured, packaged, tested & supplied with address | | | | | |
| 2 | OPERATING CONDITIONS | | | | | |
| 2.1 | Fluid handled | | | | | |
| 2.2 | Fluid temperature (Min / Max) °C | | | | | |
| 2.3 | Capacity (m3/hr) | | | | | |
| 2.4 | Suction pressure (kg/cm2,a) | | | | | |
| 2.5 | Discharge Pressure (kg/cm2,a) | | | | | |
| 2.6 | Max. suction Pressure (kg/cm2,a) | | | | | |
| 2.7 | Differential Pressure, Rated (kg/cm2) | | | | | |
| 2.8 | Differential head (m) | | | | | |

The drawing, design and details given on this format are the property of WorleyParsons Engineering Pvt. Ltd. They are merely loaned on the borrower's express agreement that they will not be reproduced, copied, exhibited or used, except in the limited way permitted by a written consent given by the tender to the borrower for the intended use.

| SL. NO. | PARAMETER | INFORMATION ON PROPOSED MODEL | INFORMATION ON REFERRED EXISTING INSTALLATIONS | | | REMARKS |
|---|---|---|---|---|---|---|
| | | | Ref – 1 | Ref – 2 | Ref – 3 | |
| 2.9 | NPSHR (m) | | | | | |
| 2.10 | Efficiency | | | | | |
| 2.11 | BKW | | | | | |
| 2.12 | Minimum Continuous Stable Flow, (m3/hr) | | | | | |
| 2.13 | Rated Speed | | | | | |
| 2.14 | Speed range for variable speed drive | | | | | |
| 2.15 | MAWP casing (kg/c m2G)<br>@15°C<br>@ pumping temperature | | | | | |
| 3 | CONSTRUCTION | | | | | |
| 3.1 | No. of stages | | | | | |
| 3.2 | Casing split – Outer casing (Axial / Radial) | | | | | |
| 3.3 | Casing split – Inner casing (Axial / Radial) | | | | | |
| 3.4 | First Impeller Type (Single flow / Double flow) | | | | | |

The drawing, design and details given on this format are the property of WorleyParsons Engineering Pvt. Ltd. They are merely loaned on the borrower's express agreement that they will not be reproduced, copied, exhibited or used, except in the limited way permitted by a written consent given by the tender to the borrower for the intended use.

| SL. NO. | PARAMETER | INFORMATION ON PROPOSED MODEL | INFORMATION ON REFERRED EXISTING INSTALLATIONS | | | REMARKS |
|---|---|---|---|---|---|---|
| | | | Ref – 1 | Ref – 2 | Ref – 3 | |
| 3.5 | Impeller diameter – Rated/ Maximum/ Minimum (mm) | | | | | |
| 3.6 | Impeller mounting (Inline/ Back to back) | | | | | |
| 3.7 | Balancing Device used (Balance drum/ Balance disc/ Others) | | | | | |
| 3.8 | Type of Radial Bearing (Antifriction/ Sleeve/ Tilting Pad/ Others) | | | | | |
| 3.9 | Type of Thrust Bearings (Taper land/ Tilting Pad/ Others) | | | | | |
| 3.10 | Span between bearings (mm) | | | | | |
| 3.11 | Shaft diameter under : Seals/ Bearings (mm) | | | | | |
| 3.12 | Whether rotor is rigid or flexible? | | | | | |
| 3.13 | Whether the proposed model and reference models have identical hydraulic design (for impeller/ diffuser/ volute) | | | | | |
| 3.14 | Type of lubrication (Pressurised/ Splash/ Ring/ Oil mist/ Grease) | | | | | |
| 3.15 | Lubrication system (API-610/ API-614/ Manufacturer Standard) | | | | | |

The drawing, design and details given on this format are the property of WorleyParsons Engineering Pvt. Ltd. They are merely loaned on the borrower's express agreement that they will not be reproduced, copied, exhibited or used, except in the limited way permitted by a written consent given by the tender to the borrower for the intended use.

| SL. NO. | PARAMETER | INFORMATION ON PROPOSED MODEL | INFORMATION ON REFERRED EXISTING INSTALLATIONS | | | REMARKS |
|---|---|---|---|---|---|---|
| | | | Ref – 1 | Ref – 2 | Ref – 3 | |
| 3.16 | Type of mechanical seal (Single / Double) | | | | | |
| 3.17 | API Seal plan No. | | | | | |
| 3.18 | API cooling plan | | | | | |
| 4 | MATERIAL OF CONSTRUCTION | | | | | |
| 4.1 | API – 610 Material Code | | | | | |
| 4.2 | Outer Casing | | | | | |
| 4.3 | Inner Casing | | | | | |
| 4.4 | Impellers | | | | | |
| 4.5 | Shaft | | | | | |
| 4.6 | Shaft sleeves- interstage | | | | | |
| 4.7 | Shaft sleeves under sleeves | | | | | |
| 5 | OTHER INFORMATION ON INSTALLATIONS | | | | | |
| 5.1 | Date of supply of entire unit | | | | | |
| 5.2 | Date of commissioning of entire unit | | | | | |

The drawing, design and details given on this format are the property of WorleyParsons Engineering Pvt. Ltd. They are merely loaned on the borrower's express agreement that they will not be reproduced, copied, exhibited or used, except in the limited way permitted by a written consent given by the tender to the borrower for the intended use.

| SL. NO. | PARAMETER | INFORMATION ON PROPOSED MODEL | INFORMATION ON REFERRED EXISTING INSTALLATIONS | | | REMARKS |
|---|---|---|---|---|---|---|
| | | | Ref – 1 | Ref – 2 | Ref – 3 | |
| 5.3 | No. of operating hours completed as on the date of issue of material requisition | | | | | |
| 5.4 | Major problems encountered | | | | | |
| 5.5 | Purchaser's Name and Address | | | | | |
| | Name (Company / Organization ) | | | | | |
| | Name of Contract Person | | | | | |
| | Address | | | | | |
| | Telephone No. | | | | | |
| | Fax No. | | | | | |
| | Email-id | | | | | |

# Appendix 9 LOADING AND PENALTY CRITERIA

# APPENDIX 9

# LOADING/PENALTY CRITERIA

## 1.0 Scope

This specification describes the loading & penalty criteria applicable to Centrifugal Pumps

## 2.0 Performance Guarantees

Loading and penalty criteria shall be based on guaranteed performance of the Pump. The parameter for loading shall be the BKW of the pump at the guaranteed (rated) operating point specified in the data sheets.

## 3.0 Loading Criteria

3.1 Total Cost

The total cost of all packages of an Item number (including all working & standby packages) for evaluation purposes shall be computed as under:

Total cost of an item number for evaluation purposes = A+B+C

Where

A = Capital cost of an item number (including all working & standby units), Cost of VFDs including cost of commissioning spares and special tools

B = Cost of Mandatory spares

C = Differential operating cost as defined hereunder

3.2 Differential operating cost

3.3 Differential operating cost (C) is defined as under :

C (in Rupees) = Nop x (BKWE – BKWR) x CF x 8650x DF

Where

Nop = Number of operating units

| | | |
|---|---|---|
| BKWE | = | Guaranteed shaft power (kW) for the pump quoted by the Vendor under evaluation. |
| BKWR | = | Lowest quoted (guaranteed) pump BKW (amongst the technically acceptable vendors) |
| CF | = | Cost of energy, 5.5 Rupees per kWh. |
| 8650 | = | Number of operating hours per year |
| DF | = | Discounting factor to arrive at Net Present Value (NPV) based on number of operating years as defined under clause 3.3.1 |

3.3.1 Discounting factor (DF) is defined as under :

$$DF = \sum_{n=2}^{n=k+1} [1 / \{1+(X/100)\}^{n}]$$

where

k = Number of operating years for which loading is to be done as specified i.e. 5 years

X = Percentage rate of interest 12 %

DF = 3.2185

[The above formula considers one year time for start–up of operation]

The maximum loading to be applied however shall not exceed 10 % of the total capital cost i.e. (A+B) as defined in 3.1

Pump item _____ along with VFDs shall be evaluated & ordered as one package on one Vendor.

## 4 Penalty Criteria

During the performance test at the Vendors works, in case the pump(s) fail to meet the guaranteed values, the following procedure shall be followed.

## APPENDIX 9 - LOADING / PENALTY CRITERIA

4.1 In case during shop performance test, the BKW consumed by the pump (as defined under clause 2.0) exceeds the stipulated guaranteed value by more than 4% the subject pump gets rejected.

However for excess power (kW) consumed over and above the guaranteed BKW upto a maximum of four percent the Vendor shall be penalised for extra energy consumption for each pump having tested BKW greater than the guaranteed value as defined hereunder :

The penalty shall be worked out on the basis of differential operating cost (Pc) as under:

$P_c$ (in Rupees) = $(BKW_T - BKW_G) \times CF \times 8650 \times DF$

Where

$BKW_T$ = Pump BKW as obtained from shop test results (corrected to pumping fluid)

$BKW_G$ = Guaranteed Pump BKW as defined in 2.0

4.2 – The maximum penalty to be charged for non-conformance to guaranteed values during the shop performance test of all pump(s) of an Item Number put together (including all working & standby units), shall not exceed 10 % of the total capital cost i.e. (A+B) as defined in 3.1.

– This penalty shall be independent of any other penalties specified elsewhere in the bid / inquiry documents.

# Appendix 10 MANDATORY SPARES FOR MULTI STAGE CENTRIFUGAL PUMPS

# APPENDIX 10

## MANDATORY SPARES FOR MULTISTAGE MAINLINE CENTRIFUGAL PUMPS

Checklist for Mandatory Spare Parts – Centrifugal Horizontal Pumps (Multistage)

Equipment Item Number: _____ Total No. of Units Installed: _____

| Sr. No. | Part Description | Quantity Required (Based on No. of Installed Units) | | | | | | | Quoted (Yes / No / Not Appl.) | Unit Price (Per Set) | Total Price |
|---|---|---|---|---|---|---|---|---|---|---|---|
| | | 1 | 2 | 3 | | | | | | | |
| A | **Mechanical** | | | | | | | | | | |
| a | **Mainline Pump** | | | | | | | | | | |
| 1 | Set of case wearing rings | 2 | 2 | 2 | | | | | | | |
| 2 | Set of Impeller wearing rings | 2 | 2 | 2 | | | | | | | |
| 3 | Set of Intermediate bushings | 2 | 2 | 2 | | | | | | | |
| 4 | Set of Balance Drum Sleeve (Blushing ) | 2 | 2 | 2 | | | | | | | |
| 5 | Set of Labyrinths for bearing housing | 2 | 2 | 2 | | | | | | | |
| 6 | Set of Gaskets, O-rings | 2 | 4 | 6 | | | | | | | |
| 7 | Set of Bearings, NDE | *2* | *2* | 2 | | | | | | | |
| 8 | Set of Bearings, DE | *2* | *2* | 2 | | | | | | | |
| 9 | Set of Flexible elements of Coupling | 1 | 1 | *2* | | | | | | | |
| b | **Mechanical seals For Mainline Pump** | | | | | | | | | | |
| 1 | Set of Mechanical Seals along with Shaft Sleeves under seals with gland plates - (1 Set consisting of both DE and NDE side) | 2 | 2 | *3* | | | | | | | |

**APPENDIX 10 - MANDATORY SPARES FOR MULTISTAGE MAINLINE CENTRIFUGAL PUMPS**

| Sr. No. | Part Description | Quantity Required (Based on No. of Installed Units) | | | | | | | Quoted (Yes / No / Not Appl.) | Unit Price (Per Set) | Total Price |
|---|---|---|---|---|---|---|---|---|---|---|---|
| | | 1 | 2 | 3 | | | | | | | |
| c | **Additional Spares for AXIALLY SPLIT PUMPS** | | | | | | | | | | |
| 1 | Complete rotor assembly dynamically balanced including balancing drum **( Refer *Refer* Note*Note -77*)** | 1 | 1 | 1 | | | | | | | |
| | | | | | | | | | | | |
| d | **Lube Oil System** | | | | | | | | | | |
| 1 | **Lube Oil Pump (Main + Stand By)** | | | | | | | | | | |
| i | Complete bare pump assembly excluding driver couplings & base plate for each pump type | 1 | 1 | 1 | | | | | | | |
| 2 | **Lube Oil Filters** | | | | | | | | | | |
| i | Filter cartridge / element along with set of gaskets, 'O' – Rings | 10 | 20 | 30 | | | | | | | |
| 3 | **Lube Oil Coolers** | | | | | | | | | | |
| i | Set of Gaskets, 'O' Rings | 2 | 4 | 6 | | | | | | | |
| | | | | | | | | | | | |
| e | **Mechanical Seal Plan Instruments** | | | | | | | | | | |
| 1 | Pressure Transmitter | 1 | 1 | 1 | | | | | | | |
| 2 | Level Transmitter | 1 | 1 | 1 | | | | | | | |
| 3 | Level Gauge | 1 | 1 | 1 | | | | | | | |
| | | | | | | | | | | | |
| | | | | | | | | | | | |

**APPENDIX 10 - MANDATORY SPARES FOR MULTISTAGE MAINLINE CENTRIFUGAL PUMPS**

| Sr. No. | Part Description | Quantity Required (Based on No. of Installed Units) | | | | | | | Quoted (Yes / No / Not Appl.) | Unit Price (Per Set) | Total Price |
|---|---|---|---|---|---|---|---|---|---|---|---|
| | | 1 | 2 | 3 | | | | | | | |
| B | **ELECTRICAL** | | | | | | | | | | |
| A | **Motor for Main line Pump** | | | | | | | | | | |
| 1 | Set of Bearings (NDE + DE) | 1 | 1 | 2 | | | | | | | |
| 2 | Terminal Block | 1 | 1 | 1 | | | | | | | |
| | | | | | | | | | | | |
| B | **Electric Motor for Lub. Oil Pump** | | | | | | | | | | |
| 1 | Set of Bearings (NDE + DE) | 1 | 1 | 2 | | | | | | | |
| 2 | Set of Cooling Fans (for M.V. motor only) | 1 | 1 | 1 | | | | | | | |
| 3 | Terminal Block | 1 | 1 | 1 | | | | | | | |
| | | | | | | | | | | | |
| C | **VFD** | | | | | | | | | | |
| 1. | Power cell for VFD – 1 no. | - | - | - | | | | | | | |
| 2. | 1 set of all types of PCB (modules) of VFD (1 no. for each variety) | - | - | - | | | | | | | |
| | | | | | | | | | | | |
| **D** | **UCP- PLC** | | | | | | | | | | |
| 1. | 1 set of all types of modules of UCP-PLC and vibration & Temperature monitoring rack (1 no. of each variety) | - | - | - | | | | | | | |

**APPENDIX 10 - MANDATORY SPARES FOR MULTISTAGE MAINLINE CENTRIFUGAL PUMPS**

Note:

1. The word 'Set' means the quantity required for full replacement of that part in one machine.
2. The Bidder shall indicate the unit prices of the spare parts and shall quote for all the mandatory spares as defined above & as applicable to the proposed design of the equipment. In case, any spare which is listed in the checklist but not applicable due to specific construction / design of the equipment, the same shall be highlighted as 'Not Applicable' against that spare supported with proper technical explanation.
3. Spare parts shall be identical in all respects to the parts fitted on the main equipment, including dimensions, material of construction & heat treatment.
4. The cost of these Mandatory Spares shall be added to the 'Total Cost' for commercial evaluation of the offer.
5. In case no rate is furnished by bidder, it shall be concluded that the quoted package rate includes for all the spares listed. The Bidder is advised to furnish the above checklist, duly completed & consolidated, along with the techno-commercial offer (i.e. both unpriced & priced copies.
6. This is a typical list for horizontal multistage main line pumps. Bidder to fill and submit this list for each pump item along with the bid.
7. ***The spare rotor shall be crated in a metal container for transportation and storage; the crating method shall be suitable for at least 4 years storage in both horizontal and vertically suspended position. The container shall be equipped for nitrogen blanketing*****Fully assembled set of rotor shall be enclosed in air tight container made for this purpose. So as to keep the rotor assembly in vertical position for storage. The container shall also have facility to keep it nitrogen purged.**

# Appendix 11 VENDOR DATA REQUIREMENT LIST

# APPENDIX-11: VENDOR DATA REQUIREMENT LIST

Scope:-

1. Separate drawings and document listed in this VDRL shall be submitted for each pump and auxiliary skid.
2. Drawings and documents listed shall be submitted on agreed dates and in accordance with the instructions listed in the engineering requisition. The documents listed below shall be submitted station wise.

| Sl. No. | Description | Quantity To Be Submitted | | | | | | | Schedule |
|---|---|---|---|---|---|---|---|---|---|
| | | Pre-Award with Tender | After Award | | | | | | |
| | | | Info | FA | CF | Class | MDR (X) | OMM (X) | |
| **Schedules** | | | | | | | | | |
| 1. | Vendor Document Schedule (SDS) | | | 2P,2D | 2P,2D | | | | 2(2) |
| 2. | Fabrication/Production Schedule | X | | 2P,2D | 2P,2D | | | | 2(2) |
| 3. | Sub-Order Schedule/Copies Sub Orders | | | 2P,2D | 2P,2D | | | | 2(2) |
| 4. | Progress Report | | | 2P,2D | 2P,2D | | | | 2(2) |
| 5. | Contract Specific Inspection and Test Plan | | | 2P,2D | 2P,2D | | X | | 4 |
| 6. | Contract Specific Quality Plan | | | 2P,2D | 2P,2D | | | | 4 |
| 7. | General Arrangements (including info. Required for carrying out foundation design) | X | | 2P,2D | 2P,2D | | | X | 6 |
| 8. | Interface And Connection Schedule | X | | 2P,2D | 2P,2D | | | | 6 |
| 9. | Utility Requirements | X | | 2P,2D | 2P,2D | | | X | 8 |
| 10. | P&ID | X | | 2P,2D(3) | 2P,2D(3) | | | X | 8 |
| 11. | Cause And Effect Chart | X | | 2P,2D(4) | 2P,2D(4) | | | X | 12 |
| 12. | Control Phil. And Block Logic Diagram. | X | | 2P,2D(4) | 2P,2D(4) | | | X | 6 |
| 13. | Operating Philosophy | X | | 2P,2D | 2P,2D | | | X | 6 |
| 14. | Equipment Data Sheets | X | | 2P,2D | 2P,2D | | | X | 6 |
| 15. | Motor Data Sheet (Refer Electrical part listed below from point 62) | X | | 2P,2D | 2P,2D | | | X | 2(11) |
| 16. | Instrument Data Sheets | | | 2P,2D(3) | 2P,2D(3) | | | X | 12 |
| 17. | Noise Data Sheet | X | | 2P,2D | 2P,2D | | | X | 8(8) |
| 18. | Coupling Data Sheet | | | 2P,2D(5) | 2P,2D(5) | | | X | 6 |
| 19. | Rotating Element Calculation | | | 2P,2D(6) | 2P,2D(6) | | X | | 12 |
| 20. | Driven Equipment Performance Curve | X | | 2P,2D(7) | 2P,2D(7) | | X | | 8 |
| 21. | Electrical Performance Curves (Refer Electrical part listed below from point 62) | X | | 2P,2D | 2P,2D | | X | X | |
| 22. | Reliability and Availability | | | | 2P,2D | | | | 8 |
| 23. | Equipment Detail Drawings (including air cooled Heat Exchangers along with Thermal calculations) | | | 2P,2D | 2P,2D | | | X | 8 |
| 24. | Ancillary Piping Drawing | | | 2P,2D | 2P,2D | | | | 6 |
| 25. | Cross Section | X | | 2P,2D | 2P,2D | | | X | 8 |
| 26. | Parts List / Bill of Material | | | 2P,2D | 2P,2D | | | X | 8 |
| 27. | Seal and Seal System | X | | 2P,2D(6) | 2P,2D(6) | | | X | 8 |
| 28. | Instrument Location Drawings | | | 2P,2D | 2P,2D | | X | | 10 |
| 29. | Instrument Schedule | | | 2P,2D | 2P,2D | | X | X | 10 |
| 30. | Wiring Schematic Diagram | | | 2P,2D | 2P,2D | | X | X | 12 |
| 31. | Termination Details | | | 2P,2D | 2P,2D | | X | X | 12 |
| 32. | Logic Diagrams | | | 2P,2D(4) | 2P,2D(4) | | X | X | 6 |
| 33. | Hook Up Diagram | | | 2P,2D | 2P,2D | | X | X | 12 |
| 34. | Loop Diagram, ,Functional Design Basis | | | 2P,2D | 2P,2D | | X | X | 10 |
| 35. | Cable Block Diagram, ,Control System Architecture | X | | 2P,2D | 2P,2D | | | X | 12 |
| 36. | Instrument Outline Drawings | | | 2P,2D | 2P,2D | | | X | 12 |
| 37. | Serial Link | X | | 2P,2D | 2P,2D | | | X | 6 |
| 38. | Weld Procedures | | | 2P,2D | 2P,2D | | X | | 8 |

| Sl. No. | Description | Quantity To Be Submitted | | | | | | | Schedule |
|---|---|---|---|---|---|---|---|---|---|
| | | Pre-Award with Tender | After Award | | | | | | |
| | | | Info | FA | CF | Class | MDR (X) | OMM (X) | |
| **Schedules** | | | | | | | | | |
| 39. | NDE Procedures | | | 2P,2D | 2P,2D | | X | | 8 |
| 40. | Surface Preparation, Painting and Coating Specification | X | | 2P,2D | 2P,2D | | X | | 8 |
| 41. | Operator Qualifications | | | 2P,2D | 2P,2D | | X | | |
| 42. | Functional and Performance Test Procedure | | | 2P,2D | 2P,2D | | X | | 8 |
| 43. | Hydrotest Procedures | | | 2P,2D | 2P,2D | | X | | 8 |
| 44. | Factory Acceptance Test Procedure | | | 2P,2D | 2P,2D | | X | | 8 |
| 45. | Site Acceptance Test Procedure | | | 2P,2D | 2P,2D | | X | | 8 |
| 46. | Manufacturing Record Book Index | | | 2P,2D | 2P,2D | | X | | 12 |
| 47. | Manufacturing Record Book | | | 2P,2D(9) | 2P,2D(9) | | X | | (1) |
| 48. | Material Certificates | | | | | | X | | |
| 49. | Hazardous Area Certificates | | | | | | X | | 8 |
| 50. | Test Results | | | | | | X | | (8) |
| 51. | Specification Waivers | X | | 2P,2D | 2P,2D | | X | | 4 |
| 52. | Inspection Release Notes | | | | | | X | | |
| 53. | Documents Travelling With Goods | | | | | | | | 12 |
| 54. | Packing, Shipping, Handling And Storage Procedure | | | 2P,2D | 2P,2D | | | X | 12 |
| 55. | Preservation Procedure | | | 2P,2D | 2P,2D | | | X | 12 |
| 56. | Installation Instructions | | | 2P,2D | 5P,2D | | | X | 12 |
| 57. | Field Fabrication Items | | | 2P,2D | 2P,2D | | | X | 12 |
| 58. | Spare Parts Interchangeability Record (SPIR) | X | | 2P,2D(9) | 10P,2D(9) | | | X | 12 |
| 59. | Operating and Maintenance Manual | | | 2P,2D(9) | 2P,2D(9) | | | X | 16 |
| 60. | Vendors Catalogue | | | 2P,2D | | | | X | |
| 61. | Lubrication Schedule | X | | 2P,2D | 2P,2D | | | X | 12 |
| 62. | Electrical | | | | | | | | |
| a | Duly filled in Datasheets for all Motors & VFD | X | | 2P,2D | 2P,2D | | X | X | 2 |
| b | Dimensional / Assembly drawings.<br>- GA Drawings including clearance requirements for VFDs<br>- GA Drawings for motors along with terminal box for motors<br>- GA Drawings for Local control stations<br>- Mounting details<br>- Nameplate details and ratings<br>- Cable termination and arrangement drawings for VFDs | X | | 2P,2D | 2P,2D | | X | | 6 |
| c | Bill of material | | | 2P,2D | 2P,2D | | X | | 6 |
| d | Sizing calculations for transformers , VFD,Reactors, busbars, CT & PTs, Auxiliary power | X | | 2P,2D | 2P,2D | | X | X | 6 |
| e | Power & control schematics, Transformer marshalling Box, Wiring diagram, cable schedule, interconnection wiring drawings | | X | | | | X | X | 6 |
| f | Electrical Performance Curves | X | | 2P,2D | 2P,2D | | X | X | 6 |
| 63. | Space requirement for indoor / outdoor equipment | X | | 2P,2D | 2P,2D | | X | | 6 |

**REQUISITION FOR MAINLINE CENTRIFUGAL PUMPS**

| Sl. No. | Description | Quantity To Be Submitted | | | | | | | Schedule |
|---|---|---|---|---|---|---|---|---|---|
| | | Pre-Award with Tender | After Award | | | | | | |
| | | | Info | FA | CF | Class | MDR (X) | OMM (X) | |
| **Schedules** | | | | | | | | | |
| 64. | QA plan | | | 2P,2D | 2P,2D | | X | | 8 |
| 65. | Factory acceptance test procedure | | | 2P,2D | 2P,2D | | X | | 8 |
| 66. | Site acceptance test procedure | | | 2P,2D | 2P,2D | | X | | 8 |
| 67. | Type test certificates & statutory approval for flameproof equipments | | X | | | | X | | 8 |
| 68. | PTR (experience record proforma) for input transformers , VFD, Motor | X | | | | | | | |
| 69. | Recommendation / instructions for storage at site | | X | | | | | X | 8 |
| 70. | Interface details / schematics block diagram between owner's and Vendor equipment | | | 2P,2D | 2P,2D | | | X | 6 |
| 71. | Cable layout on skid showing location of terminal / junction boxes | | X | 2P,2D | 2P,2D | | | X | 8 |
| 72. | Cable schedule (between various electrical equipment supplied by vendor) | | X | 2P,2D | 2P,2D | | | X | 8 |
| 73. | Interconnection diagram (Between various electrical equipment supplied by vendor) | | X | 2P,2D | 2P,2D | | | X | 8 |

**Note**

1 'Schedule' column indicates proposed schedule for submission of documents in each relevant category. (eg PO+2 = by two weeks after purchase order date).

2 CF documents due 2 WEEKS after receipt of FA documents by Vendor.

3 The VDRL shall be read in conjunction with the Specification.

**Document Submission**

Please submit all drawings or documents listed above to

Fax

Attention

For submission of goods please refer to Purchase Order for delivery addresses.

**Requirement status**

| | | |
|---|---|---|
| Info | = | For information |
| FA | = | For approval |
| CF | = | Certified final |
| Class | = | (see below) |
| MDR | = | Manufacturers Data Report |
| OMM | = | Operating & Maintenance Manual |

**Class**

| | | |
|---|---|---|
| 1 | = | Documents required post order to enable the detail design to proceed. |
| 2 | = | Documents required post order to ensure equipment meets technical specification and purchase order requirements. |
| 3 | = | Non-critical documents – only required to closeout purchase order requirements. |

**Format**

| | | |
|---|---|---|
| P | = | Paper print |
| D | = | CD rom |
| M | = | Part of Manual |
| X | = | Inclusion on MRB/OMM |

NOTES:-

(1) To be submitted prior to shipment

(2) And fortnightly thereafter

(3) Applicable to pumps with auxiliary systems i.e. lubrication, cooling, seal and vibration/temp monitoring.

(4) Applicable to pump sets with control logic
(5) Applicable to pumps with API 671 couplings
(6) Where applicable
(7) Including torque/speed characteristics
(8) Immediately after test
(9) MDR & OMM - one copy to be submitted for review, Final MDR / OMM shall consist of 3 Hard copies & 3 Soft Copies.
(10) Sufficient information for buyer to estimate motor
(11) Sufficient information for buyer to purchase motor

# Appendix 12 INTERFACE SIGNALS FOR MAINLINE PUMPS

## Appendix-12: INTERFACE SIGNAL FOR MAINLINE PUMPS

## INTERFACE SIGNAL FOR MAINLINE PUMPS

### INTERFACE OF UCP WITH PURCHASER'S SUPPLIED PLC SYSTEM

The unit control panel (UCP) for each pump (wherever applicable) shall be complete in all respects for start-up, shutdown, control and safety operation of the pump and cover the various requirements as covered in this MR.

The various signals required to be interfaced between UCP and the Purchaser's PLC system shall meet the functionality outlined in this MR. These signals shall be terminated in dedicated terminal strips in the UCP marshalling/ Relay rack to be supplied by the vendor and segregated signal wise i.e.

- Analog inputs/ outputs (4-20mA).
- Contact Input / Outputs (potential free contacts, with rating of 2.A @ 24V DC).

The various signals required to be interfaced between the UCP and MCC/ VFD controller panel shall meet the functionality outlined in this MR. These signals shall be terminated in dedicated terminal strips in the marshalling racks to be supplied by the vendor and segregated signal wise i.e.

- Analog inputs/ outputs (4-20mA).
- Contact inputs / outputs (potential free contacts, with rating suitable for MCC interrogation).

All signals from the pump package to UCP shall be terminated in the junction boxes located at the battery limit. Separate junction boxes shall be used for the following type of signals : -

- Intrinsically safe analog inputs / outputs (4-20mA)
- Non-intrinsically safe analog inputs / outputs (4-20mA)
- Intrinsically safe inputs from vibration probe.
- Intrinsically safe RTD inputs including bearing temperatures.
- Intrinsically safe contact inputs.
- Non-intrinsically safe contact inputs / outputs.

The intrinsically safe barriers and converters shall be part of UCP rack. The active barriers

shall be used of type MTL or equivalent.

**Signals interface between UCP and Purchaser's supplied PLC system**

All signals are to be interfaced through UCP marshalling rack.

The signals to be transmitted from UCP to Purchaser's PLC shall be as covered in this MR and also taking care of the following: -

- Pump start command from UCP/ LCS (normally open, close on pump start command)
- Pump stop command feedback from UCP (normally close, open on pump stop command

From UCP)

- Pump stop command feedback from LCS (normally close, open on pump stop command from

LCP)

- Common fault alarm status (open on alarm) (this contact is for the tripping of the pumps due to

upset in the machine parameters and shall be repeated to the PLC for information/ alert/ shutdown)

- Pump running status (normally open, close on pump running status)
- Pump stopped status (normally open, close on pump running status)
- Speed loading station local/ remote mode status (open on local)
- Speed process variable analog signal (4-20mA)
- Synchronous transfer

The signals to be transmitted from Purchaser's PLC to UCP shall be as covered in this MR and also taking care of the following: -

- Pump process trip command (normally close, open on pump trip)
- Final pump start command by PLC logic (normally open, close on pump start command)
- Station ready to start (normally open, close on ready to start)
- Speed remote set point analog signal (4-20mA)
- Start / Stop command of auxiliaries.

**Signals interface between MCC and UCP.**

All signals are to be interfaced through UCP marshalling rack. The signals to be transmitted from UCP to MCC shall be as covered in this MR and also taking care of the following:-

- Auxiliary pump start command (normally open, close on pump start command)
- Auxiliary pump stop command (normally close, open on pump stop command from UCP)
- Main pump start command (normally open, close on pump start command)
- Main pump trip command (normally close, open on pump stop command)

The signals to be transmitted from MCC to UCP shall be as covered in this MR and also taking care of the following: -

- Auxiliary pump stop status (normally open, close on pump stop)
- Auxiliary pump running status (normally open, close on pump start)
- Main pump stop status (normally open, close on pump stop)

- Main pump running status (normally open, close on pump start)

**Signals interface between UCP and VFD controller panel**

All signals to be interfaced through UCP marshalling rack..

The signals to be transmitted from VFD controller panel to UCP shall be as covered in this MR and also taking care of the following: -

- Speed process variable feedback (4-20mA)
- Motor rated power/current (4~20 mA)

The signals to be transmitted from UCP to VFD controller panel shall be as covered in this MR and also taking are of the following: -

- Speed remote set point analog signal (4-20mA)
- Common repeat contact for winding temperature high (normally close, open on high)

**The signals to be transmitted from LCS to VFD shall take care of the following**

- Pump stop command (normally close, open on pump stop command)
- Pump start command (normally close, open on pump stop command)

**The signals to be transmitted from VFD to LCS shall take care of the following: -**

- Current indication
- Drive ON indication
- Drive Ready to Start indication

**The signals to be transmitted from HV switchgear to VFD shall take care of the following breaker position**

- ON/OFF/Trip indication for VFD breaker
- Service and Disconnect position for VFD breaker
- Lockout relay operated for VFD breaker
- On/Off/Trip indication for DOL breaker
- Service and Disconnect position for DOL breaker
- Lockout relay operated for DOL breaker

**The signals to be transmitted from VFD to HV Switchgear shall take care of the following breaker position**

- Lockout relay operated (2 nos)

- Command for VFD breaker close/open/trip
- Command for DOL breaker close/open/trip

Refer to Datasheet for Variable frequency drive for details of I/O interface with HV switchgear, Motor and LCS.

# Appendix 13 PROVEN TRACK RECORD

**Appendix-13: PROVEN TRACK RECORD**

**Proven Track Record (PTR)**

Bidder shall complete the Experience Record Proforma enclosed with the inquiry document to amply prove the Bidder and the offered pumps meet the Bidder Qualification Criteria (BQC) and Equipment Qualification Criteria (EQC) respectively for technical acceptance. In addition, manufacturer's catalogue and general reference list for Centrifugal Pump / Packages shall also be furnished along with the proposal

# Appendix 14 VIJAYWADA MOTOR DATASHEET

# Data sheet for High voltage Squirrel Cage induction motor

## ELECTRICAL DESIGN DATA

| | | | | | |
|---|---|---|---|---|---|
| 1 | Motor tag no | 30-PM-CF-101A/B/C | | | |
| 2 | Voltage (V) | 6600V ± 10% | Phase 3 | Frequency (Hz) | 50Hz ± 3% |
| 3 | System Fault level (kA) | 21.9kA for 0.25 sec. | | | |
| 4 | Type of motor | Squirrel Cage Induction | Duty | Continuous | |
| 5 | Design Ambient temp (°C) | 40°C | Temp rise (°C) | 80 | |
| 6 | Cable size | LATER | Type | XLPE insulated armoured | |
| 7 | Enclosure type | IP-55 | Cooling | CACA/TEFC/TETV | |
| 8 | Haz. Area classification,Gas group | ZONE-2 IIA,IIB | Location | Outdoor in Pump Shed/ ~~Indoor~~ | |
| 9 | Reacceleration | Yes/~~No~~ | Differential protection C.Ts ~~Required~~/ Not Required | | |
| 10 | Type of H.V termimal /box | Phase segregated | Insulation class F | Temp Class T3 | |
| 11 | Method of starting | DOL | | | |
| 12 | Type of Explosion Protection :Ex(n)/Ex(e)/Ex(d)/Ex(p): | Ex (d) | Applicable standards | EIL std. spec. 6-51-31Rev2 | |

## Technical particulars from driven equipment manufacturer

| | |
|---|---|
| 13 | Type of driver mounting/suggested kw/Manufacturer |
| 14 | Shaft kW/ kW at max.load |
| 15 | Speed/rotation of equip from coupling end |
| 16 | Starting/max. Torque required-mkg |
| 17 | $WK^2$ of equipment Including/excluding flywhel-$kgm^2$ |
| 18 | Maximum thrust/ pulsation rate |
| 19 | Equipment/coupling type |
| 20 | Starting condition - On no load/ Under loaded condition |

## Technical particulars from motor manufacturer

| | | | | |
|---|---|---|---|---|
| 22 | Manufacturer BHEL | | | |
| 23 | kW Rating 900KW | | No of poles 2 | |
| 24 | Frame designation 1MJ7712-2 | Ex(d) | Mounting B-3 | |
| 25 | Full load current (A) | | | |
| 26 | Full load speed (rpm) | | Full load torque (mkg) | |
| 27 | Starting torque (as a % of FLT) | | Pull out torque (as a % of FLT) | |
| 28 | Starting current at 100% Voltage (A) | 550% of FLC (Inclusive of tolerance) | | |
| 29 | Rotation viewed from coupling end | | | |
| 30 | Starting time at 80% V (sec) | 14.0 | At 100% V (sec) | 7.0 |
| 31 | Locked rotor with stand time(cold/hot) sec. at 80% V (sec) | 30/24 | At 100%V (sec) | 22/16 |
| 32 | Time (Te) for increased safety motors at 100% voltage (sec) | | | |
| 33 | $WK^2$ of motor (kg $m^2$) | | | |
| 34 | Power factor at 100% load | | Power factor at 75% load | |
| 35 | Effeciency at 100% load | | Efficiency at 75% load | |
| 36 | Space heater watts/volts | | | |
| 37 | Terminal box type FLP PSTB | | No of terminals 3+3 | |
| 38 | Type of RTD and BTD provided | | No. Of RTDs and BTDs provided | |
| 39 | Heating time constant (min) | | Cooling time constant (min) | |
| 40 | Bearing type/ no. DE SLEEVE | | Bearing type/ no. NDE SLEEVE | |
| 41 | Lubrication type SPLASH | | | |
| 42 | Weight of motor(kg)(motor/stator/rotor) | | | |
| 43 | Design of fan rotation | | Universal/ fixed/ can be changed | |
| 44 | Canopy | | Required/ Not required | |

1. Starting time calculations shall be based on operating conditions specified in bid package eg., open valve condition / closed valve condition at no load/ under load as applicable.

| REV | DATE | PURPOSE | BY | CHECKED | APPROVED |
|---|---|---|---|---|---|
| 0 | 01.8.2000 | ISSUED WITH PR | P.Bhargava | S.G | RPG |
| B | 02.12..1999 | CLIENT'S COMMENTS INCORPORATED & REISSUED WITH MR | PB | SG | RPG |
| A | 15.10.1999 | ISSUED WITH MR | PB | SG | RPG |

| | | | |
|---|---|---|---|
| ENGINEERS INDIA LIMITED NEW DELHI | Project: VIZAG-SECUNDERABAD P/L<br>Client: M/s HPCL | DATA SHEET NO.<br>4581-16-50-DS-5013 | REV<br>0 |

The drawing, design and details given on this format a... property of ENGINEERS INDIA LIMITED. They are merely loaned on the borrower's express agreement that they will not be reproduced, copied, exhibited or used, except in the limited w... permitted by a written consent given by the lender to the borrower for the intended use. EIL 1650-687-H rev 1, A4 210x297

# Appendix 15 EXISTING PUMP PERFORMANCE CURVES

**APPENDIX 15 - EXISTING PUMP PERFORMANCE CURVES**

## APPENDIX 15

## CHECK LIST: EXISTING PUMP PERFORMANCE CURVES

### 1. Visakhapatnam (Vizag) Pump Station Pump Tag no - 10-PA-CF-102 A/B/C

NUOVO PIGNONE D.V.S. BARI

QUALITY CONTROL DEPT. - TEST ROOM

CENTRIFUGAL PUMP TEST CERTIFICATE N. 16114 page 2/2

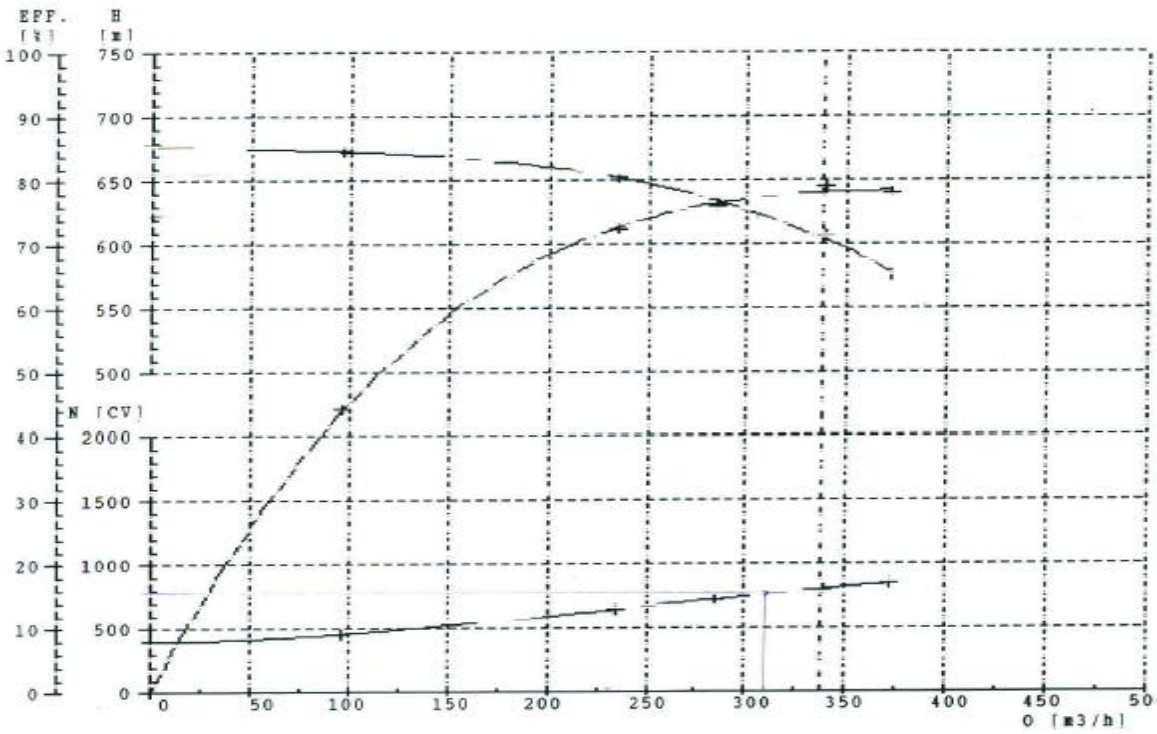


| | | |
|---|---|---|
| Customer: HINDUSTAN PETROL.<br>N.P. Job: 1207093<br>Item : 10PA-CF 102/B<br>Pump : N-4X11MSN-H/6S<br>Serial : P.16114 | CUSTOMER | Nuovo Pignone S.p.A.<br>Divisione Pompe, Valvole e Strumenti<br>Produzione Meccanica<br>OFFICINA<br>Sala Prova<br>Il Responsabile<br>(sig. Vito VISAGGIO PORCELLI)<br>12-I-92 |

**APPENDIX 15 - EXISTING PUMP PERFORMANCE CURVES**

QUALITY CONTROL DEPT. - TEST ROOM

CENTRIFUGAL PUMP TEST CERTIFICATE N. 16114 page 1/2

CUSTOMER: HINDUSTAN PETROL. N.P. JOB: 1207093 ITEM: 10PA-CF 102/B
PUMP: N-4X11MSN-H/6S SERIAL N.: P.16114

IMPELLER DIA. [mm]: 278
SUCT. FLANGE [inch]: 6
DISC. FLANGE [inch]: 6

SP. GRAV. [Kg/dm3] 1.000
VENTURI O.TY: 1 VENTURI N.: 103172

MOTOR TYPE: CT400Y2
MOTOR POWER [CV]: 1040.0
LINE VOLTAGE [V]: 3000
WATER TEMP. [C]: 29.0

CONTRACTUAL CHARACTERISTICS

SPEED [rpm]: 2985.0 CAPACITY [m3/h]: 337.80 HEAD [m]: 606.0
EFFICIENCY [%]: 79.0 POWER [CV]: 798.9 SP. GRAV. [Kg/dm3]: 0.832
NPSH [m]: *

TEST DATA ACQUISITION

| POINT N. | SPEED [rpm] | POWER [KW] | ETA [%] | VENTURI [mm] | SUCT.PRESS. [m] | DISCH.PRESS [m] |
|---|---|---|---|---|---|---|
| 1 | 2976.0 | 740.3 | 95.0 | 98.0 | 11.50 | 615.00 |
| 2 | 2967.0 | 773.0 | 95.1 | 117.0 | 15.40 | 585.00 |
| 3 | 2975.0 | 671.0 | 94.9 | 69.0 | 16.50 | 644.00 |
| 4 | 2977.0 | 601.0 | 94.9 | 47.0 | 15.90 | 665.00 |
| 5 | 2982.0 | 426.0 | 93.9 | 8.0 | 19.80 | 692.00 |
| 6 | 2986.0 | 376.0 | 93.0 | 0.0 | 22.30 | 701.00 |

TEST DATA COMPUTATION

| POINT N. | MOTOR EFF. % | INPUT POWER [CV] | CAPACITY [m3/h] | DYN.HEAD [m] | TOT.HEAD [m] | HYDR.POWER [CV] |
|---|---|---|---|---|---|---|
| 1 | 95.0 | 956.47 | 338.03 | 0.00 | 603.50 | 755.56 |
| 2 | 95.1 | 999.77 | 369.35 | 0.00 | 569.60 | 779.19 |
| 3 | 94.9 | 866.02 | 283.64 | 0.00 | 627.50 | 659.20 |
| 4 | 94.9 | 775.67 | 234.10 | 0.00 | 649.10 | 562.78 |
| 5 | 93.9 | 544.02 | 96.58 | 0.00 | 672.20 | 240.45 |
| 6 | 93.0 | 475.56 | 0.00 | 0.00 | 678.70 | 0.00 |

TEST RESULTS ADJUSTED TO CONTRACT SPEED

| POINT N. | Q [m3/h] | H [m] | ETA [%] | P [CV] |
|---|---|---|---|---|
| 1 | 339.05 | 607.16 | 79.0 | 803.51 |
| 2 | 371.59 | 576.53 | 77.9 | 847.55 |
| 3 | 284.59 | 631.73 | 76.1 | 728.26 |
| 4 | 234.72 | 652.59 | 72.6 | 650.97 |
| 5 | 96.68 | 673.55 | 44.2 | 454.26 |
| 6 | 0.00 | 678.25 | 0.0 | 395.51 |

Nuovo Pignone S.p.A.
Divisione Pompe, Valvole e Strumenti
Produzione Meccanica
OFFICINA
Sala Prova
Il Responsabile
(sig. Vito VISCONTI PORCELLI)

**APPENDIX 15 - EXISTING PUMP PERFORMANCE CURVES**

## 2. Visakhapatnam (Vizag) Pump Station Pump Tag no - 10-PA-CF-103 A/B/C

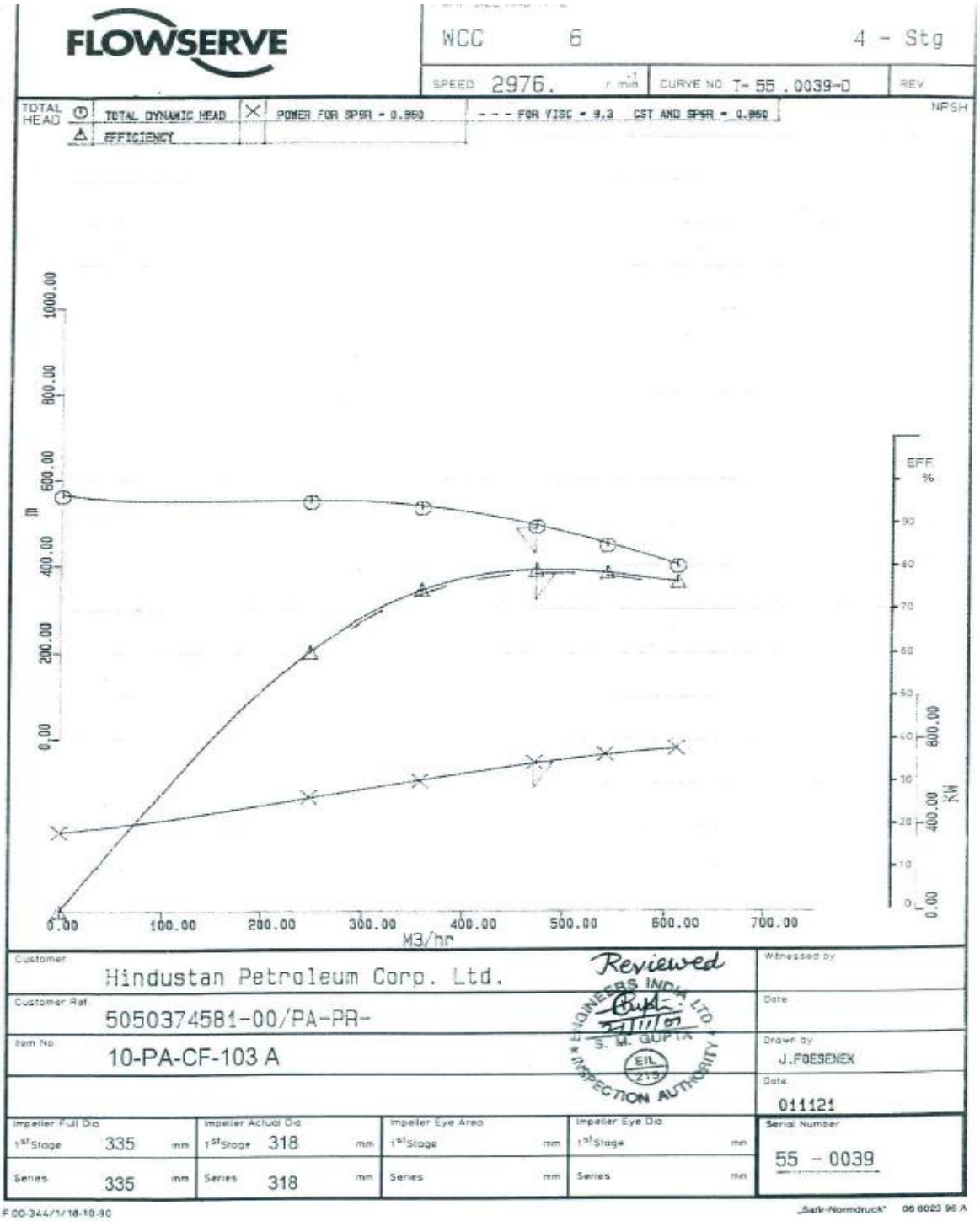

**APPENDIX 15 - EXISTING PUMP PERFORMANCE CURVES**

## 3. Rajahmundry Pump Station Pump Tag no - 20-PA-CF-101 A/B/C

Pompes Robinetterie KSB

POMPES GUINARD ENERGIE

**PROCES VERBAL D'ESSAIS**
*Performance testing report*

Page 5/6

**ESSAI:** 9111 (*Test n°*)
**N° OF:** 1-H22-855775
**N° VAS :** 6216900022/ (*Factory order*)

**Pompe** (*Pump*) **Type :** DVMX 4.6.10 CT/5 ét. (*Type*)
**Repère :** 20-PA-CF-101 A (*Item*)
**Feuille de retouche :** 019494 (*Modification sheet*)

**Roues** (*Impeller*) **F. :** [mm] (*Disc*) **A. :** 283 [mm] (*Blad*)

**Vitesse :** 2980 [Tr/mn] (*Speed*) **Densité :** 0.832 (*Density*)

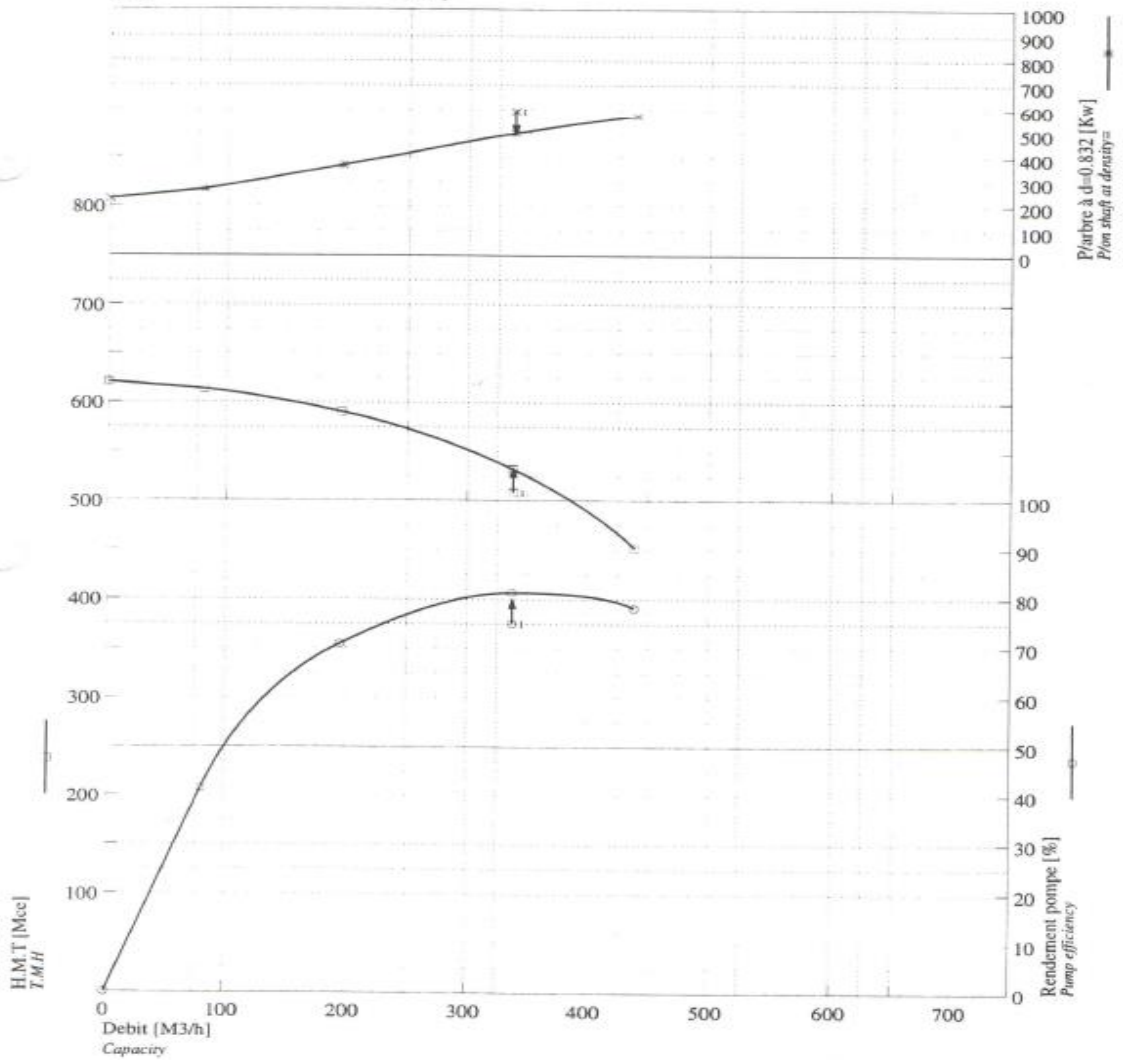

**APPENDIX 15 - EXISTING PUMP PERFORMANCE CURVES**

Pompes Robinetterie
KSB

POMPES GUINARD ENERGIE

## PROCES VERBAL D'ESSAIS
*Performance testing report*

Page 4/6
*Page*

**ESSAI:** 9111
*Test n°*

**N° OF:** 1-H22-855775

**N° VAS :** 6216900022/
*Factory order*

**Pompe** *Pump* — **Type :** DVMX 4.6.10 CT/5 ét. *Type* — **Repère :** 20-PA-CF-101 A *Item* — **Feuille de retouche :** 019494 *Modification sheet*

**Roues** *Impeller* — **F. :** *Disc* [mm] — **A. :** 283 *Blad* [mm]

**Vitesse :** 2980 [Tr/mn] *Speed* — **Densité :** 0.832 *Density*

| | | | | | | |
|---|---|---|---|---|---|---|
| Débit *Flow* | [M3/h] | 441.00 | 339.00 | 196.00 | 81.00 | 0.00 |
| Hauteur a l'asp. *Suction head* | [Mce] | 31.40 | 35.20 | 38.70 | 40.50 | 40.90 |
| Hauteur au ref. *Discharge head* | [Mce] | 487.00 | 572.00 | 635.00 | 661.00 | 669.00 |
| M.T *T.M.H* | [Mce] | 455.60 | 536.80 | 596.30 | 620.50 | 628.10 |
| Vitesse *Speed* | [Tr/mn] | 2991 | 2992 | 2995 | 2997 | 2998 |
| P/bornes *Power on terminals* | [Kw] | 728.50 | 636.10 | 473.20 | 352.40 | 302.60 |
| Rendement Moteur *Motor efficiency* | [%] | 96.09 | 95.81 | 94.94 | 93.60 | 92.69 |
| P/arbre *Power on shaft* | [Kw] | 700.02 | 609.45 | 449.26 | 329.85 | 280.48 |
| Rendement pompe *Pump efficiency* | [%] | 78.16 | 81.32 | 70.85 | 41.50 | 0.00 |
| Essai ramené à vitesse=2980 *Test at speed* | | | | | | |
| Débit *Flow* | [M3/h] | 439.38 | 337.64 | 195.02 | 80.54 | 0.00 |
| H.M.T *T.M.H* | [Mce] | 452.26 | 532.50 | 590.34 | 613.48 | 620.58 |
| P/arbre *P/on shaft* | [Kw] | 692.32 | 602.15 | 442.54 | 324.27 | 275.46 |
| arbre à d=0.832 *P/on shaft at density=* | [Kw] | 576.01 | 500.99 | 368.20 | 269.79 | 229.18 |

**APPENDIX 15 - EXISTING PUMP PERFORMANCE CURVES**

## 4. Rajahmundry Pump Station Pump Tag no - 20-PA-CF-102 A/B/C

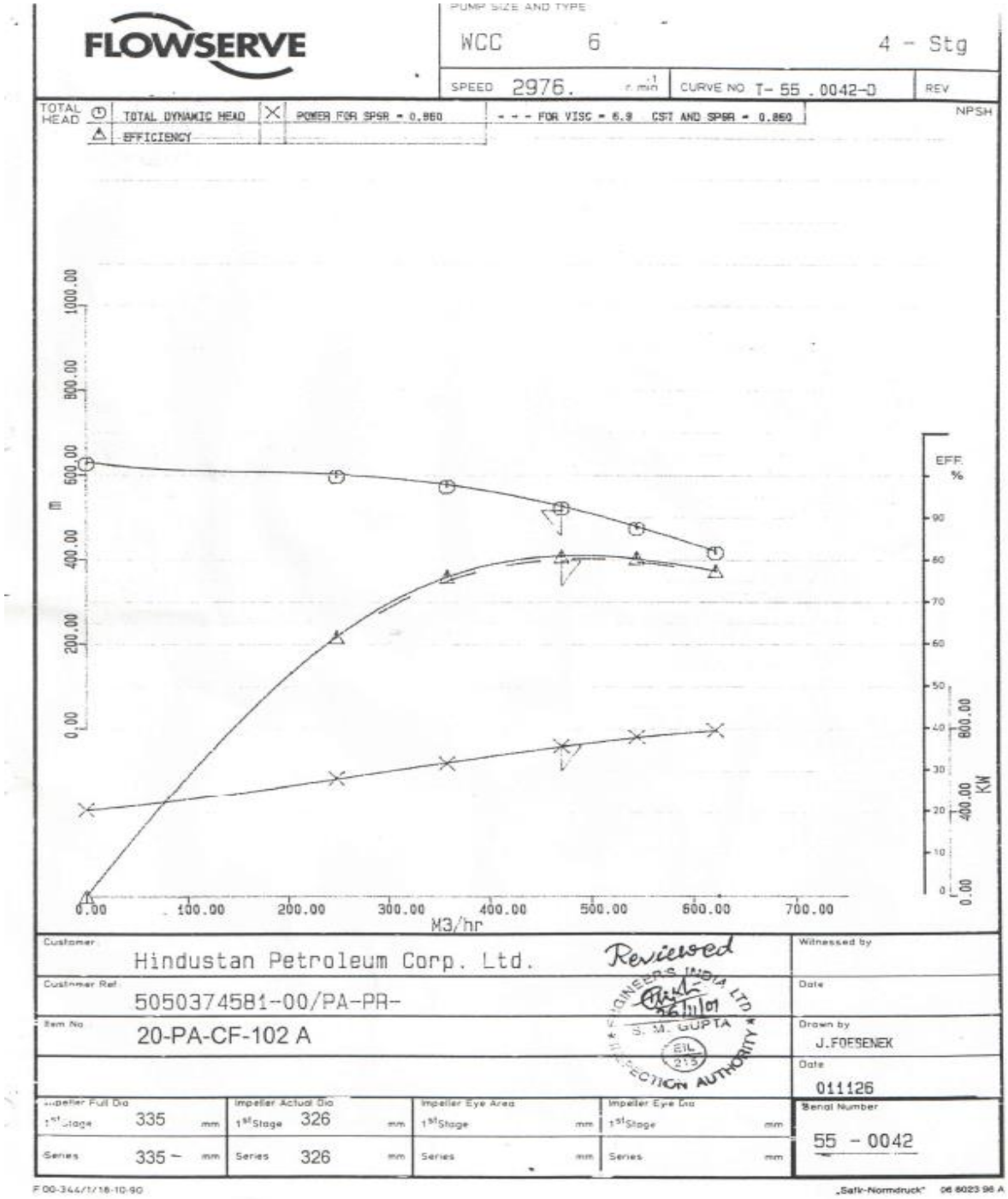

**APPENDIX 15 - EXISTING PUMP PERFORMANCE CURVES**

FLOWSERVE

** BYRON JACKSON / PUMP TEST **

PAGE 3 OF 3

| pump type & size : | customer : | job nr : |
|---|---|---|
| WCC - 6 | Hindustan Petroleum Corp. Ltd. | 55-0042 |

| customer order nr : | item nr : |
|---|---|
| 5050374581-00/PA-PR- | 20-PA-CF-102 A |

Viscosity corrections

| Corr. factors: | | |
|---|---|---|
| | Capacity | 1.000 |
| | Head at 60% B.E.P. | 1.000 |
| | Head at 80% B.E.P. | 1.000 |
| | Head at B.E.P. | 1.000 |
| | Head at 120% B.E.P. | 1.000 |
| | Efficiency | .990 |

(B.E.P. = Best Efficiency point)

| Percentage of B.E.P. | | 60% | 80% | B.E.P. | 120% |
|---|---|---|---|---|---|
| FOR RPM: 2976 | | | | | |
| ----- TDH | m | 594.96 | 568.24 | 520.51 | 454.24 |
| ----- Q | M3/hr | 290.38 | 387.17 | 483.97 | 580.76 |
| ----- Eff | % | 67.19 | 77.11 | 80.24 | 78.31 |
| ----- N | KW | 602.21 | 668.19 | 735.30 | 788.97 |

**APPENDIX 15 - EXISTING PUMP PERFORMANCE CURVES**

## 5. Vijaywada Pump Station Pump Tag no - 30-PA-CF-101 A/C (5 Stage Pumps)

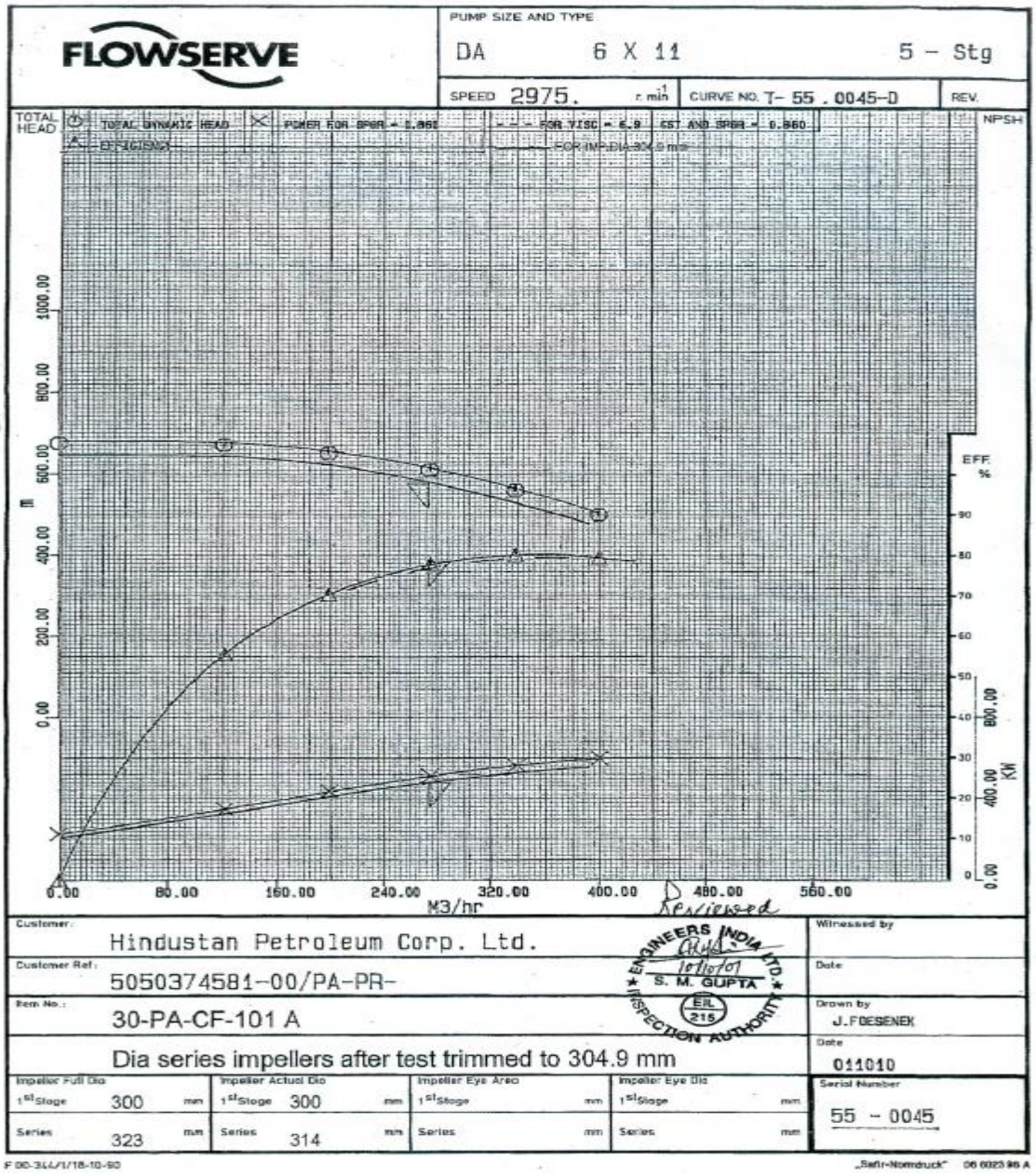

**APPENDIX 15 - EXISTING PUMP PERFORMANCE CURVES**

FLOWSERVE

** BYRON JACKSON / PUMP TEST **

PAGE 2 OF 3

pump type & size : DA - 6 X 11
customer : Hindustan Petroleum Corp. Ltd.
job nr : 55-0045

customer order nr : 5050374581-00/PA-PR-
item nr : 30-PA-CF-101 A

| point | | 1 | 2 | 3 | 4 | 5 | 6 |
|---|---|---|---|---|---|---|---|
| RPM-speed | | 2969 | 2963 | 2960 | 2973 | 2979 | 2987 |
| P-Suction | bar | + 1.63 | + 1.59 | + 1.57 | + 1.67 | + 1.68 | + 1.69 |
| P-Suction c | | + 1.63 | + 1.59 | + 1.57 | + 1.67 | + 1.68 | + 1.69 |
| P-discharge | bar | 61.35 | 56.11 | 50.00 | 65.68 | 67.98 | 68.88 |
| P-discharge c | | 61.34 | 56.10 | 50.00 | 65.67 | 67.97 | 68.87 |
| dH-Velocity | m | .9 | 1.4 | 2.0 | .5 | .1 | .0 |
| dH-Orifice | mBar | 575.00 | 870.00 | 1211.00 | 298.00 | 111.00 | |
| dH-Orifice c | | 577.23 | 870.65 | 1210.65 | 302.49 | 113.85 | .00 |
| T.D.H. | m | 610.36 | 557.98 | 496.62 | 653.35 | 676.48 | 685.89 |
| Q-Capacity | M3/hr | 275.44 | 338.28 | 398.90 | 199.36 | 122.32 | .00 |
| Watt-Reading 1 | | 629.00 | 689.00 | 731.00 | 539.50 | 434.50 | 292.00 |
| 2 | | | | | | | |
| N-Power | KW | 588.60 | 643.25 | 680.90 | 505.44 | 405.89 | 268.47 |
| Temp S/D/O | - C | 25/ 25 | 25/ 25 | 25/ 25 | 24/ 24 | 25/ 25 | 28/ 28 |
| | | / 25 | / 25 | / 25 | / 24 | / 25 | / 28 |
| FOR RPM: 2975 | | | | | | | |
| ----- TDH | m | 612.82 | 562.51 | 501.66 | 654.23 | 674.66 | 680.39 |
| ----- Q | M3/hr | 276.00 | 339.65 | 400.92 | 199.50 | 122.16 | .00 |
| ----- Eff | % | 77.66 | 79.78 | 79.08 | 70.10 | 55.44 | .00 |
| ----- N | KW | 510.21 | 561.05 | 595.79 | 436.20 | 348.23 | 228.67 |

**********

| point | |
|---|---|
| RPM-speed | |
| P-Suction | bar |
| P-Suction c | |
| P-discharge | bar |
| P-discharge c | |
| dH-Velocity | m |
| dH-Orifice | mBar |
| dH-Orifice c | |
| T.D.H. | m |
| Q-Capacity | M3/hr |
| Watt-Reading 1 | |
| 2 | |
| N-Power | KW |
| Temp S/D/O | - C |
| FOR RPM: 2975 | |
| ----- TDH | m |
| ----- Q | M3/hr |
| ----- Eff | % |
| ----- N | KW |

Test witnessed
ENGINEERS INDIA LTD
10/10/07
S. M. GUPTA
EIL 215
INSPECTION AUTHORITY

date of test : 011010
Byron Jackson Shipping nr : T-55.0045-D1

**APPENDIX 15 - EXISTING PUMP PERFORMANCE CURVES**

## 6. Vijaywada Pump Station Pump Tag no - 30-PA-CF-101 B ( 8 Stage Pump)

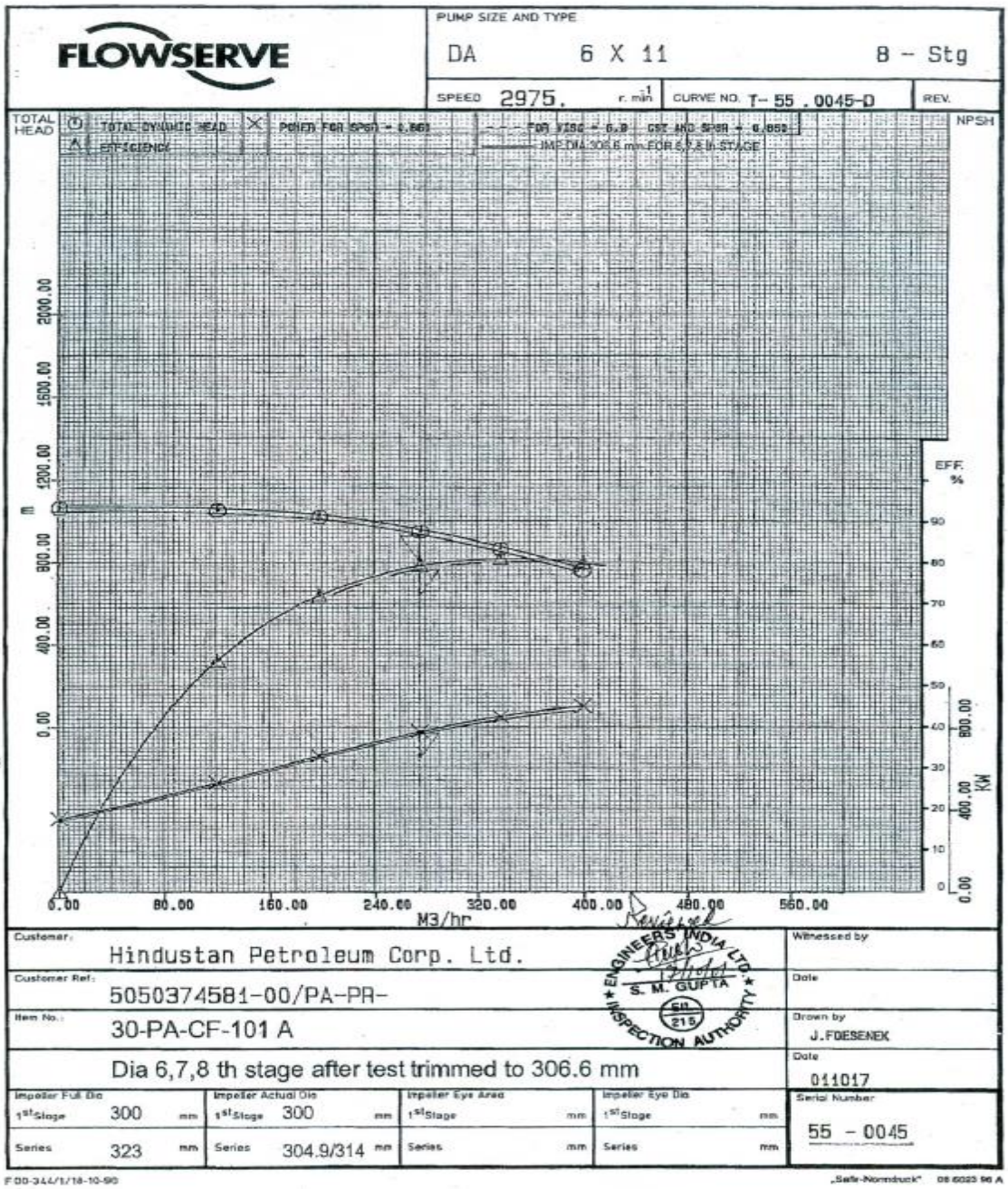

**APPENDIX 15 - EXISTING PUMP PERFORMANCE CURVES**

FLOWSERVE

** BYRON JACKSON / PUMP TEST **

PAGE 2 OF 3

pump type & size : DA - 6 X 11
customer : Hindustan Petroleum Corp. Ltd.
job nr : 55-0045

customer order nr : 5050374581-00/PA-PR-
item nr : 30-PA-CF-101 A

| point | | 1 | 2 | 3 | 4 | 5 | 6 |
|---|---|---|---|---|---|---|---|
| RPM-speed | | 2991 | 2990 | 2990 | 2992 | 2993 | 2994 |
| P-Suction | bar | + 1.56 | + 1.49 | + 1.43 | + 1.64 | + 1.69 | + 1.71 |
| P-Suction c | | + 1.56 | + 1.49 | + 1.43 | + 1.64 | + 1.69 | + 1.71 |
| P-discharge | bar | 96.83 | 88.30 | 77.90 | 104.05 | 107.35 | 108.30 |
| P-discharge c | | 96.86 | 88.34 | 77.94 | 104.08 | 107.38 | 108.33 |
| dH-Velocity | m | 1.0 | 1.4 | 2.0 | .5 | .1 | .0 |
| dH-Orifice | mBar | 507.00 | 759.00 | 1066.00 | 260.00 | 96.00 | |
| dH-Orifice c | | 507.00 | 759.00 | 1065.00 | 260.00 | 96.00 | .00 |
| T.D.H. | m | 971.58 | 886.34 | 782.25 | 1043.47 | 1075.82 | 1086.24 |
| Q-Capacity | M3/hr | 276.83 | 338.71 | 401.28 | 198.24 | 120.44 | .00 |
| Watt-Reading 1 | | 82.00 | 89.10 | 94.10 | 70.00 | 57.10 | 39.00 |
| 2 | | | | | | | |
| N-Power | KW | 923.77 | 1007.54 | 1066.46 | 781.94 | 628.98 | 421.20 |
| Temp S/D/O | - C | 25/ 25 | 25/ 25 | 26/ 26 | 25/ 25 | 24/ 24 | 28/ 28 |
| | | / 25 | / 25 | / 26 | / 25 | / 24 | / 28 |
| FOR RPM: 2975 | | | | | | | |
| ----- TDH | m | 961.21 | 877.47 | 774.42 | 1031.65 | 1062.92 | 1072.50 |
| ----- Q | M3/hr | 275.35 | 337.01 | 399.27 | 197.11 | 119.72 | .00 |
| ----- Eff | % | 79.24 | 81.08 | 80.05 | 72.01 | 56.09 | .00 |
| ----- N | KW | 782.47 | 854.48 | 904.93 | 661.56 | 531.45 | 355.90 |

**********

| point | | |
|---|---|---|
| RPM-speed | | |
| P-Suction | bar | |
| P-Suction c | | |
| P-discharge | bar | |
| P-discharge c | | |
| dH-Velocity | m | |
| dH-Orifice | mBar | |
| dH-Orifice c | | |
| T.D.H. | m | |
| Q-Capacity | M3/hr | |
| Watt-Reading 1 | | |
| 2 | | |
| N-Power | KW | |
| Temp S/D/O | - C | |
| FOR RPM: 2975 | | |
| ----- TDH | m | |
| ----- Q | M3/hr | |
| ----- Eff | % | |
| ----- N | KW | |

Test witnessed
ENGINEERS INDIA LTD. INSPECTION AUTHORITY
S. M. GUPTA
EIL 213

date of test : 011017
Byron Jackson Shipping nr : T-55.0045-D1

**APPENDIX 15 - EXISTING PUMP PERFORMANCE CURVES**

## 7. Suryapet Pump Station Pump Tag no – 40-PA-CF-101 A/B

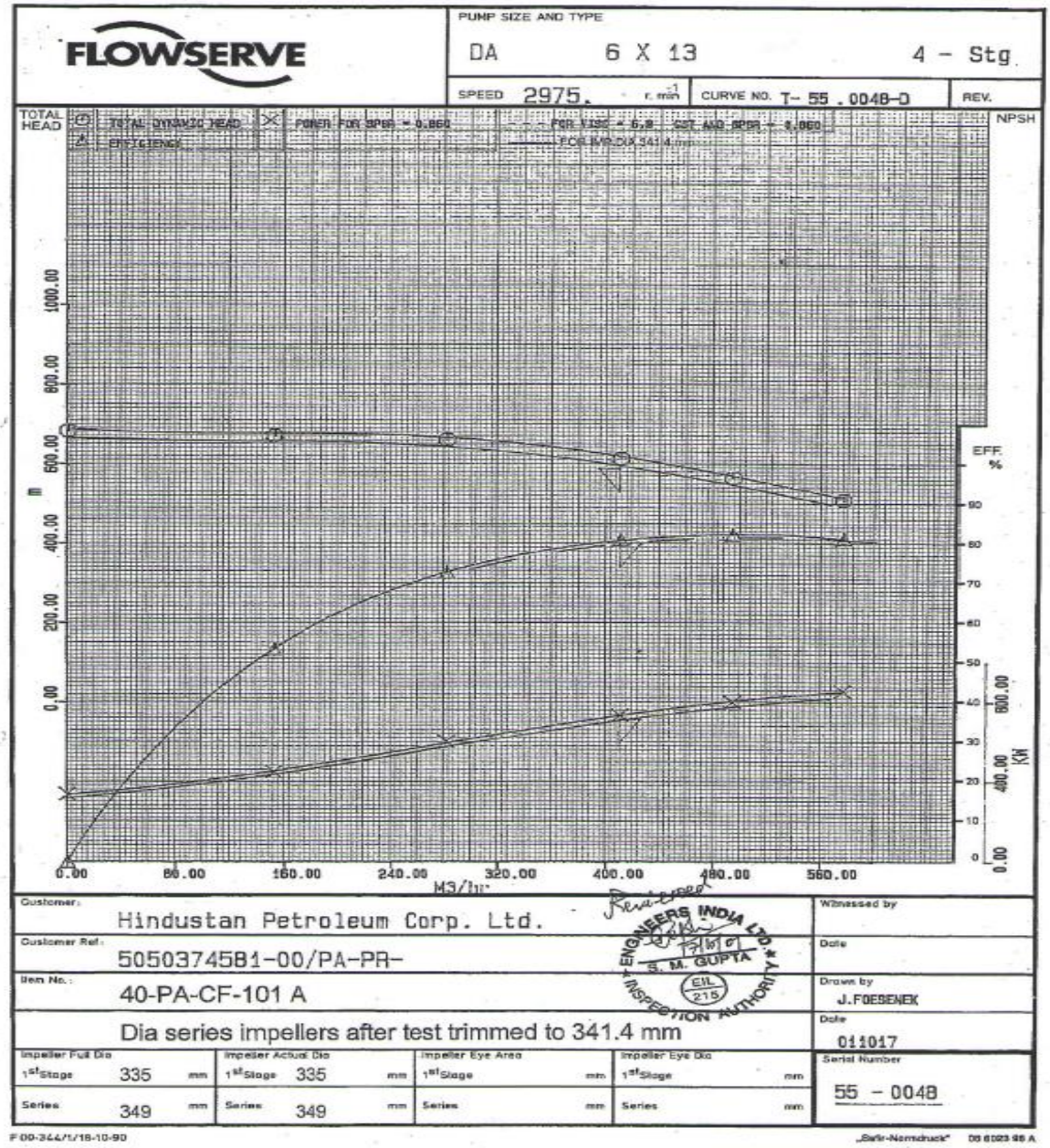

# Appendix 16 PROPOSED PUMPING SCHEME

# APPENDIX 16 : PROPOSED PUMPING SCHEME

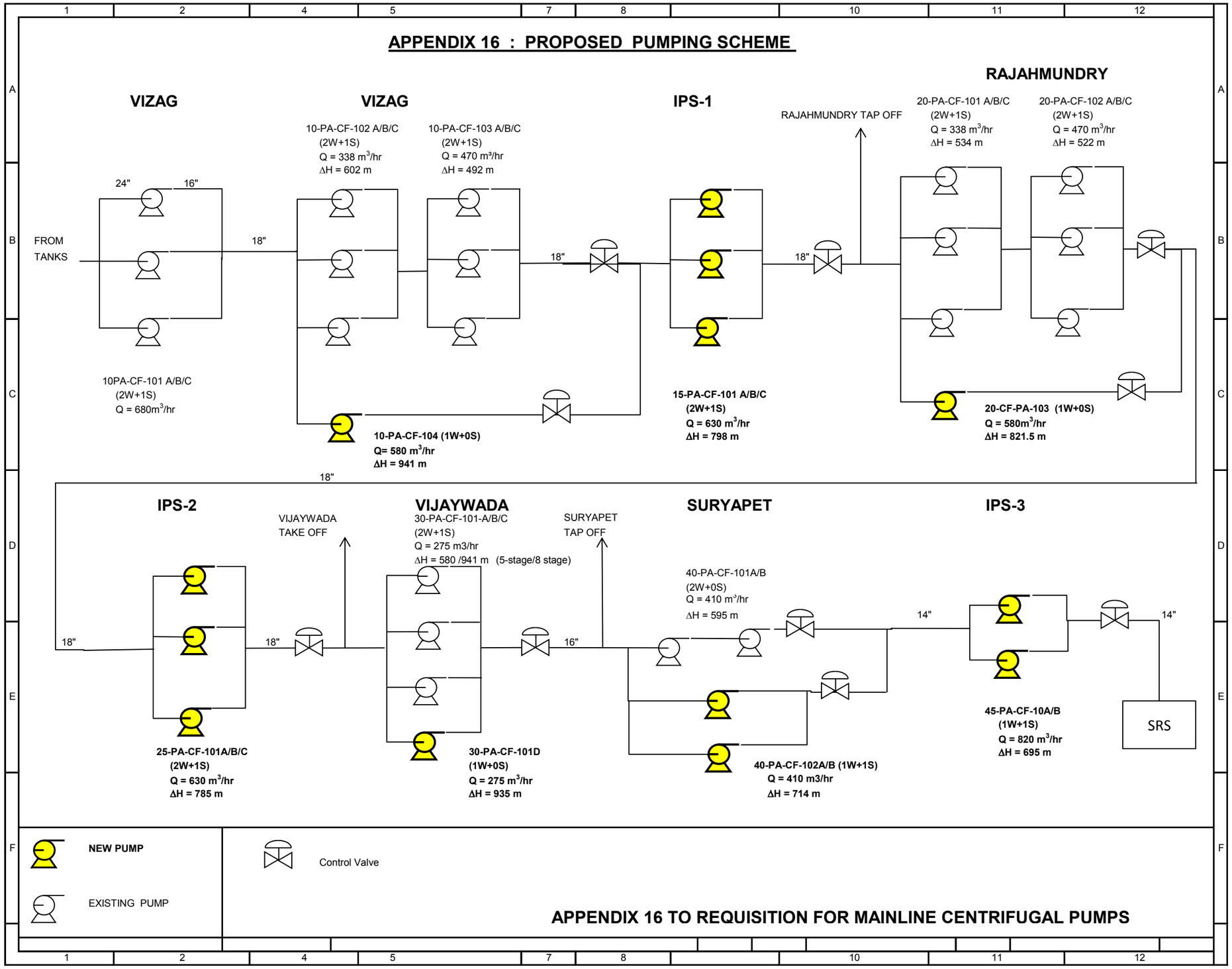


**APPENDIX 16 TO REQUISITION FOR MAINLINE CENTRIFUGAL PUMPS**

# Appendix 17 PUMP SPACE CONSTRAINTS

# APPENDIX 17 - PUMP SPACE CONSTRAINTS

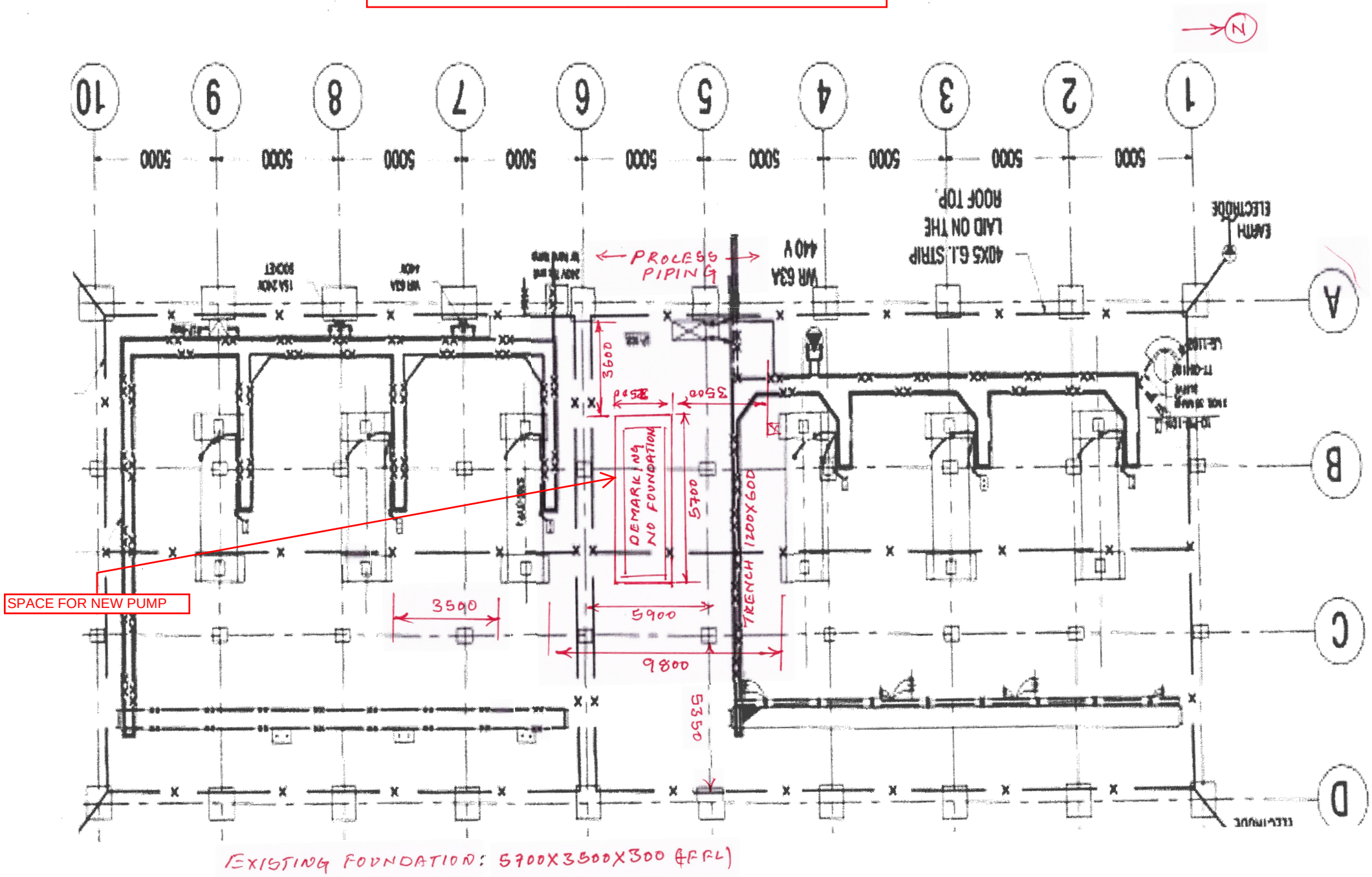


VIZAG PUMPHOUSE LAYOUT

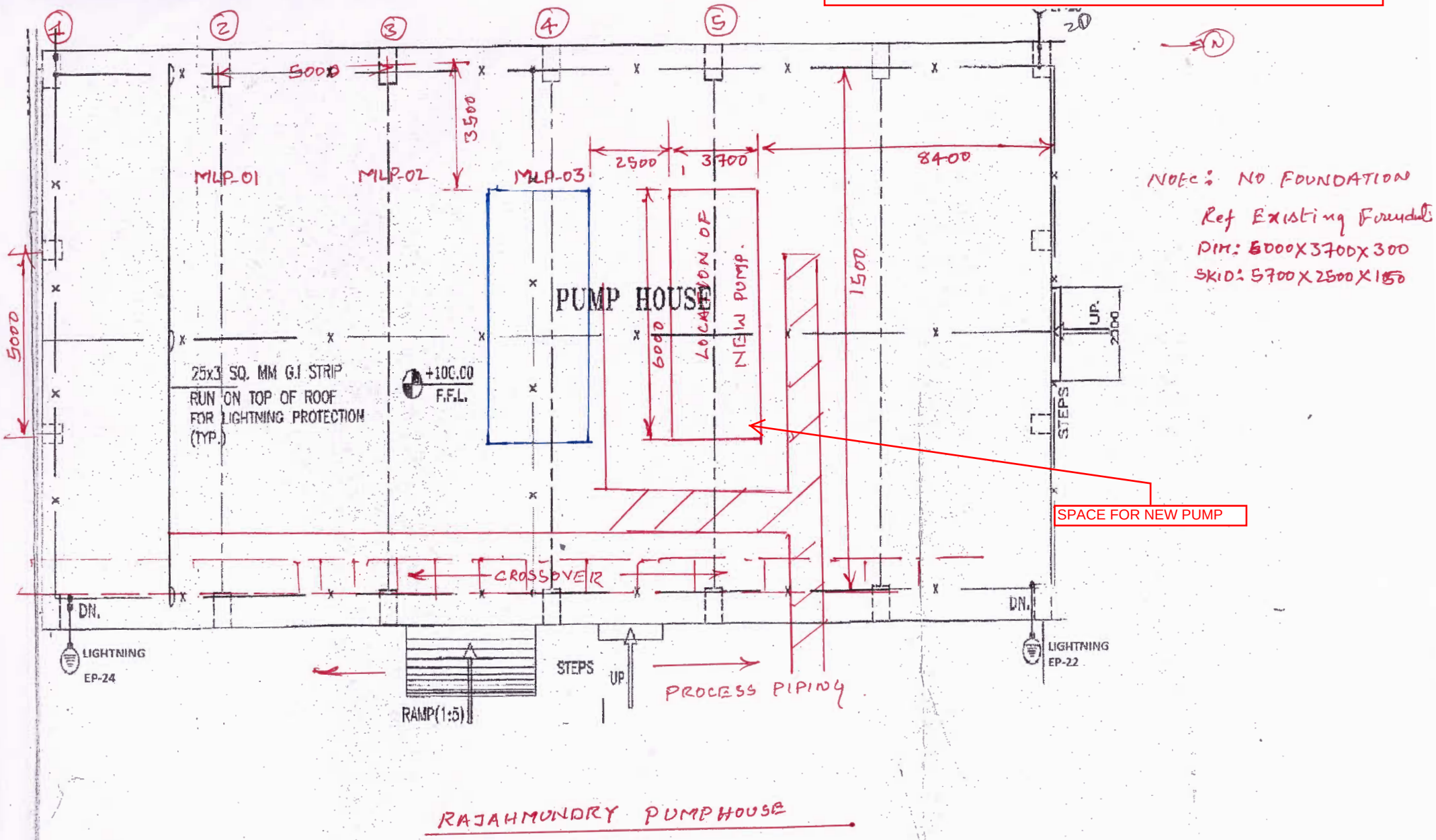


RAJAHMUNDRY PUMPHOUSE

# APPENDIX 17 - PUMP SPACE CONSTRAINTS

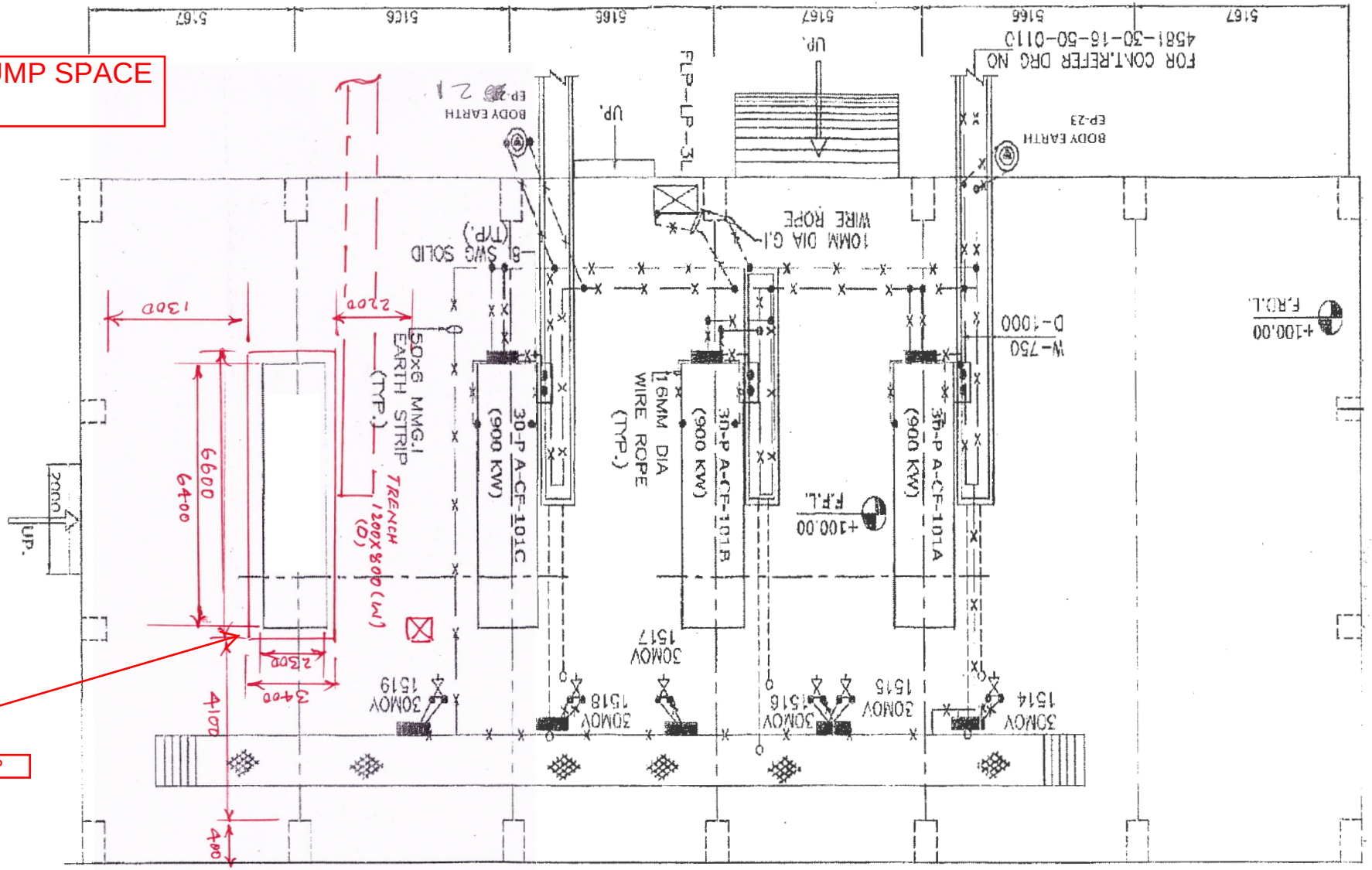


PROCESS PIPING

NOTE: FOUNDATION READY ACCORDING TO EXISTING DIMENSIONS BUT NO STRUCTURAL DETAILS MADE AVAILABLE
FOUNDATION DIMENSIONS: 6600X3400X300

APPENDIX 17 - PUMP SPACE CONSTRAINTS

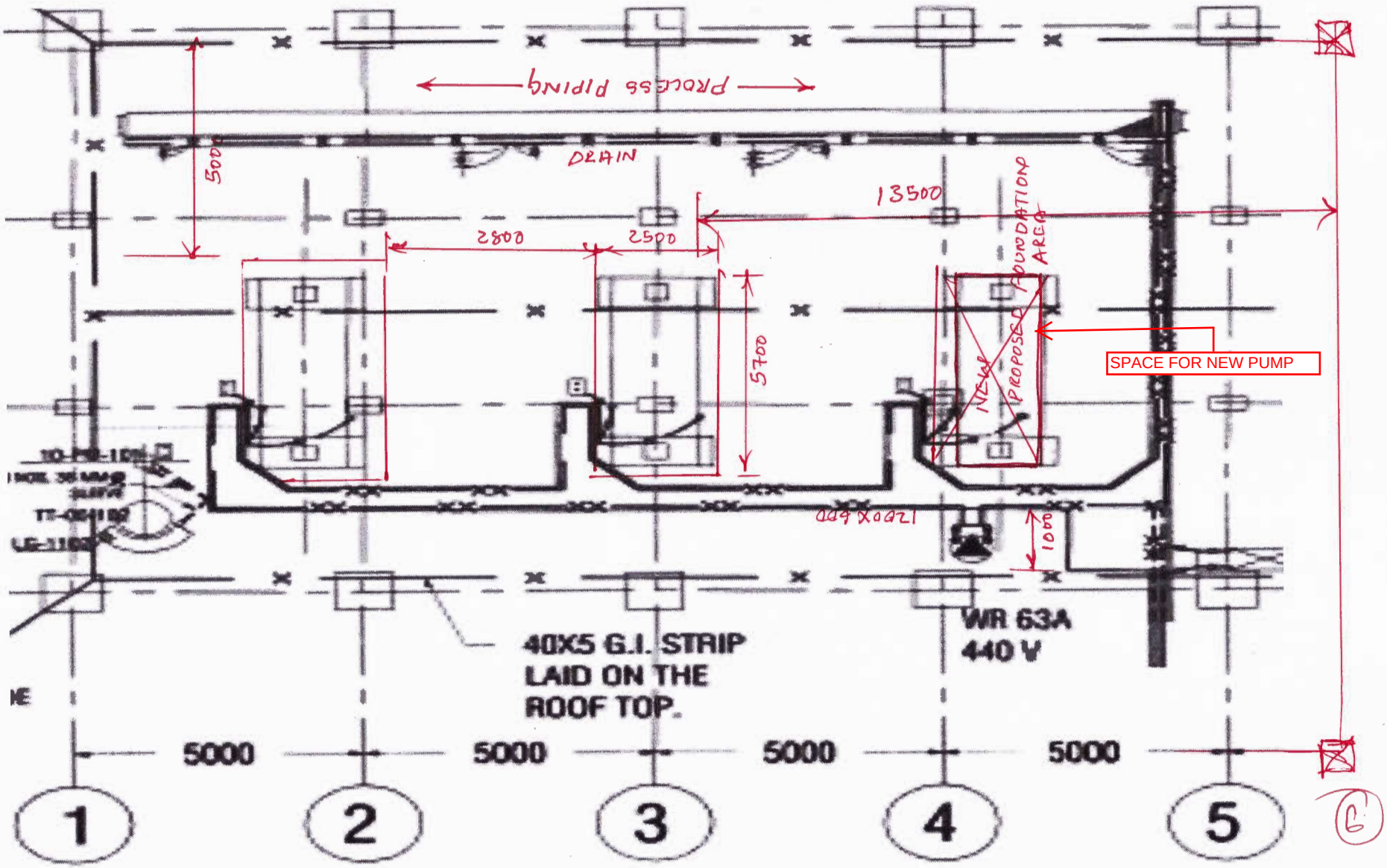


NOTE ; NO FOUNDATION AT SURYAPETA.
3700X2500X300

SURYAPETA PUMPHOUSE

# Appendix 18 UCP SPACE CONSTRAINTS

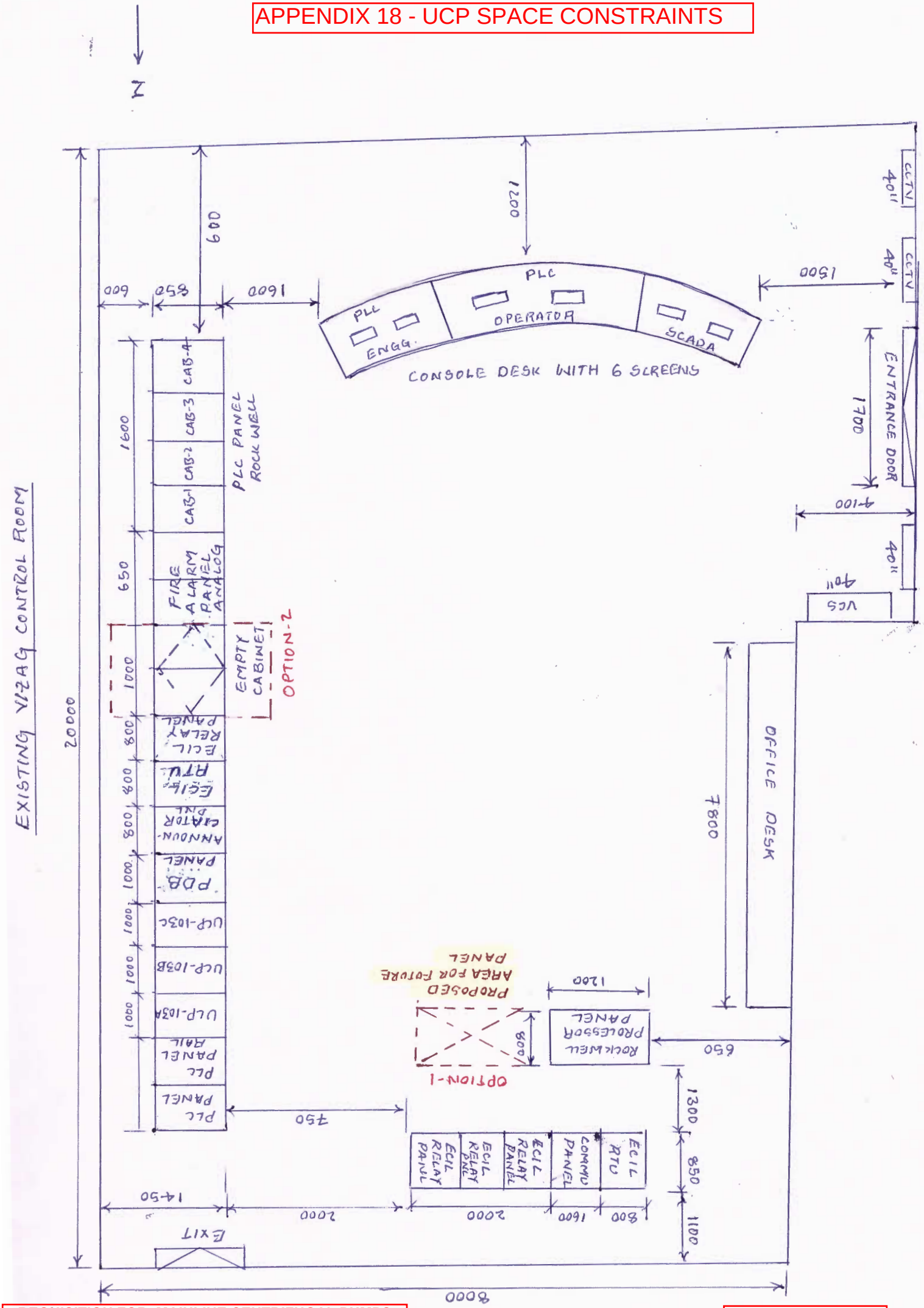
N
EXISTING VIZAG CONTROL ROOM
20000
600
850
600
1600
1200
PLC
OPERATOR
PLC
ENGG.
SCADA
CONSOLE DESK WITH 6 SCREENS
CCTV
40"
CCTV
40"
1500
ENTRANCE DOOR
1700
4-100
40"
VCS
40"
OFFICE DESK
7800
650
Rock well PROFESSOR PANEL
1200
PROPOSED AREA FOR FUTURE PANEL
800
OPTION-1
1300
850
1100
ECIL RELAY PANEL
ECIL RELAY PANEL
ECIL RELAY PANEL
COMMU PANEL
ECIL RTU
800
1600
2000
2000
750
1600
650
CAB-4
CAB-3
CAB-2
CAB-1
PLC PANEL ROCK WELL
FIRE ALARM PANEL ANALOG
EMPTY CABINET
OPTION-2
ECIL RELAY PANEL
ECIL RTU
ANNOUNCIATOR PNL
PDB PANEL
UCP-103C
UCP-103B
UCP-103A
PLC PANEL RAIL
PLC PANEL
1000
800
800
800
1000
1000
1000
1000
1000
1600
650
1000
800
750
1450
2000
EXIT
8000

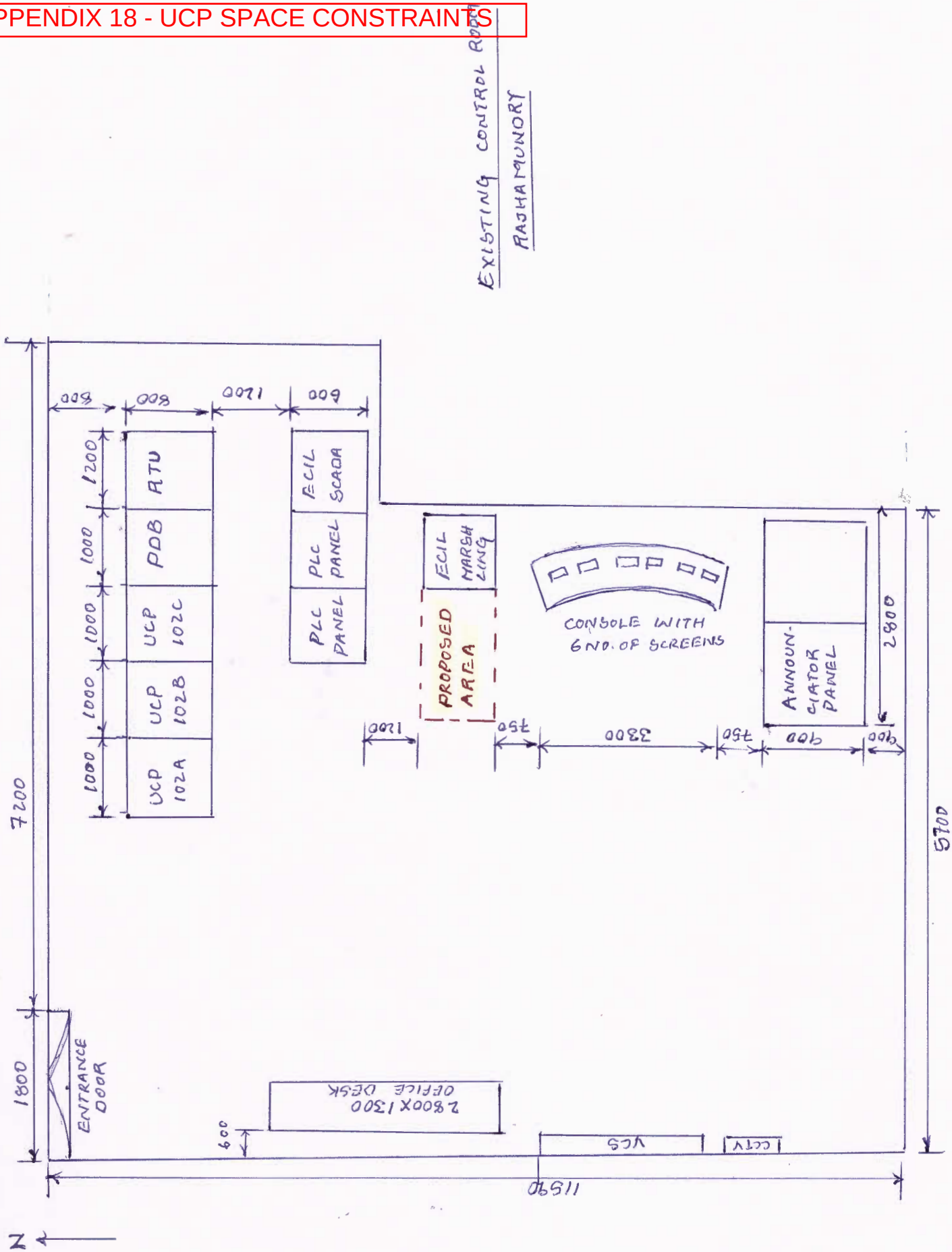
EXISTING CONTROL ROOM
RAJHAMUNDRY
UCP 102A
UCP 102B
UCP 102C
PDB
RTU
PLC PANEL
PLC PANEL
ECIL SCADA
ECIL MARSH LING
PROPOSED AREA
CONSOLE WITH 6 NO. OF SCREENS
ANNOUN-CIATOR PANEL
ENTRANCE DOOR
2800X1300 OFFICE DESK
VCS
CCTV
7200
5700
1800
2800
11590
N

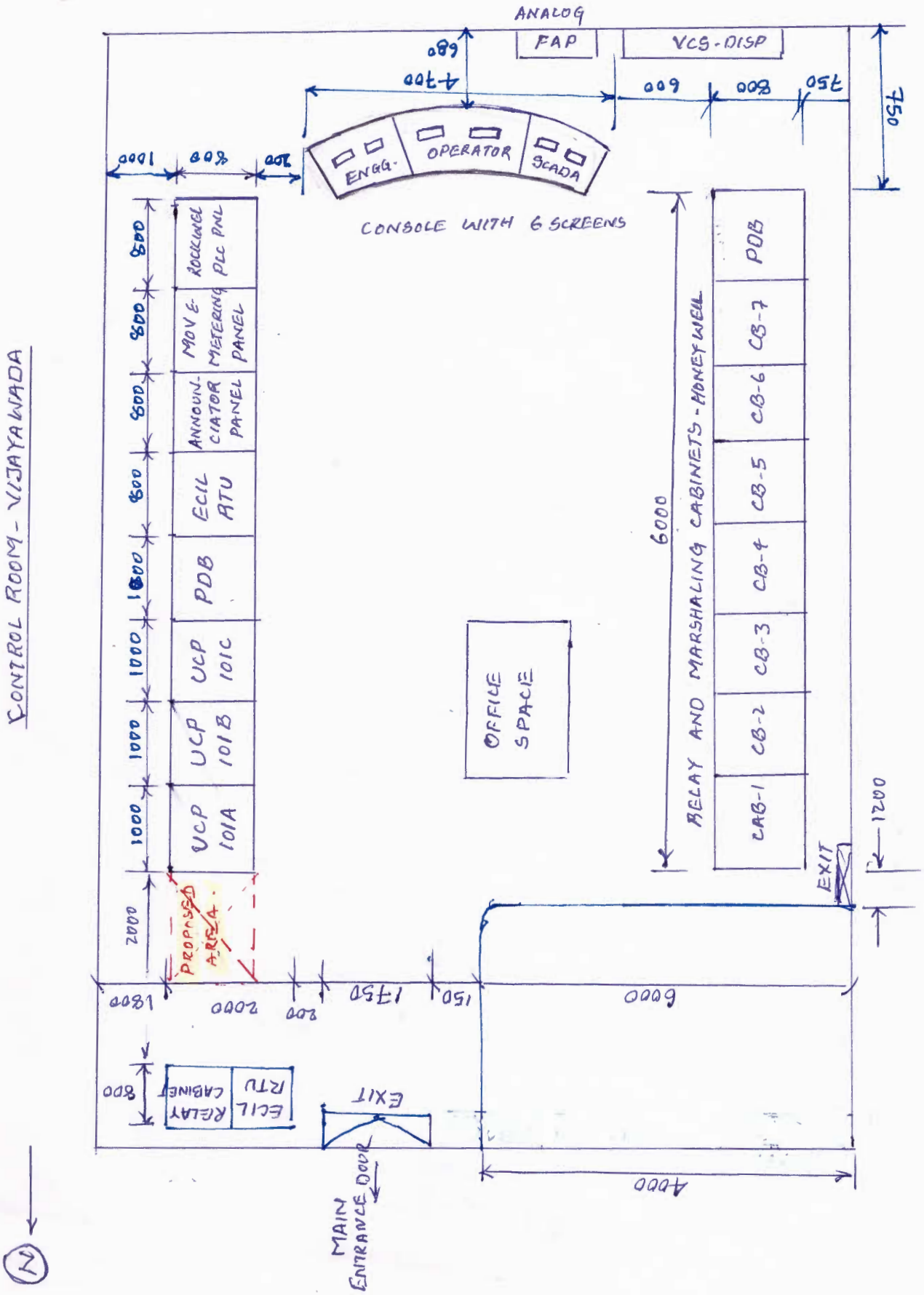
CONTROL ROOM - VIJAYAWADA
ANALOG
FAP
VCS-DISP
ENGG.
OPERATOR
SCADA
CONSOLE WITH 6 SCREENS
ROCKLINGL PLC PNL
MOV E-METERING PANEL
ANNOUN-CIATOR PANEL
ECIL RTU
PDB
UCP 101C
UCP 101B
UCP 101A
PROPOSED AREA
OFFICE SPACE
RELAY AND MARSHALING CABINETS - HONEYWELL
CAB-1
CB-2
CB-3
CB-4
CB-5
CB-6
CB-7
PDB
EXIT
ECIL RTU
RELAY CABINET
MAIN ENTRANCE DOOR
6000
4000
12000
750
N

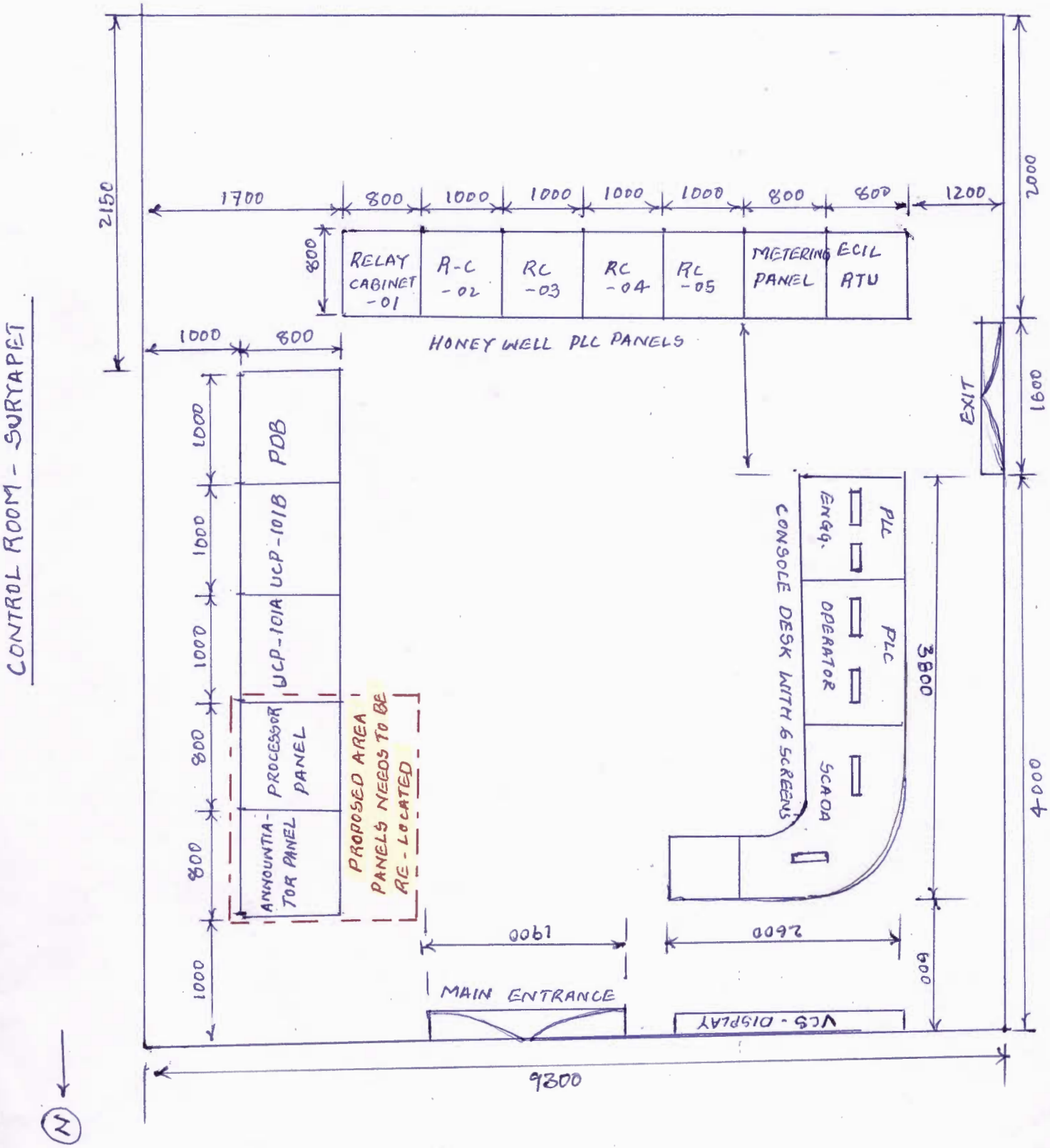
CONTROL ROOM - SURYAPET
2150
1700
800
1000
1000
1000
1000
800
800
1200
2000
800
RELAY CABINET -01
R-C -02
RC -03
RC -04
RC -05
METERING PANEL
ECIL RTU
HONEY WELL PLC PANELS
1000
800
1000
1000
1000
800
800
1000
POB
UCP-101B
UCP-101A
PROCESSOR PANEL
ANNOUNTIA-TOR PANEL
PROPOSED AREA PANELS NEEDS TO BE RE-LOCATED
EXIT
1600
PLC ENGG.
PLC OPERATOR
SCADA
CONSOLE DESK WITH 6 SCREENS
3800
4000
1900
2600
600
MAIN ENTRANCE
VCS - DISPLAY
9800
N

**Tender No. : 16000017-HD-11994**

Tender Published On : 08-Mar-2017 16:18

| Integrity Pact | | | | |
|---|---|---|---|---|
| Sl.No. | Description | HPCL File | HPCL Value | Supporting Doc. Req'd |
| 1 | Integrity Pact | integritypact.pdf | - | No |

Integrity Pact is attached separately.